E.J.M
File TP 2-14

Assessment of Energy Parks vs Dispersed Electric Power Generating Facilities

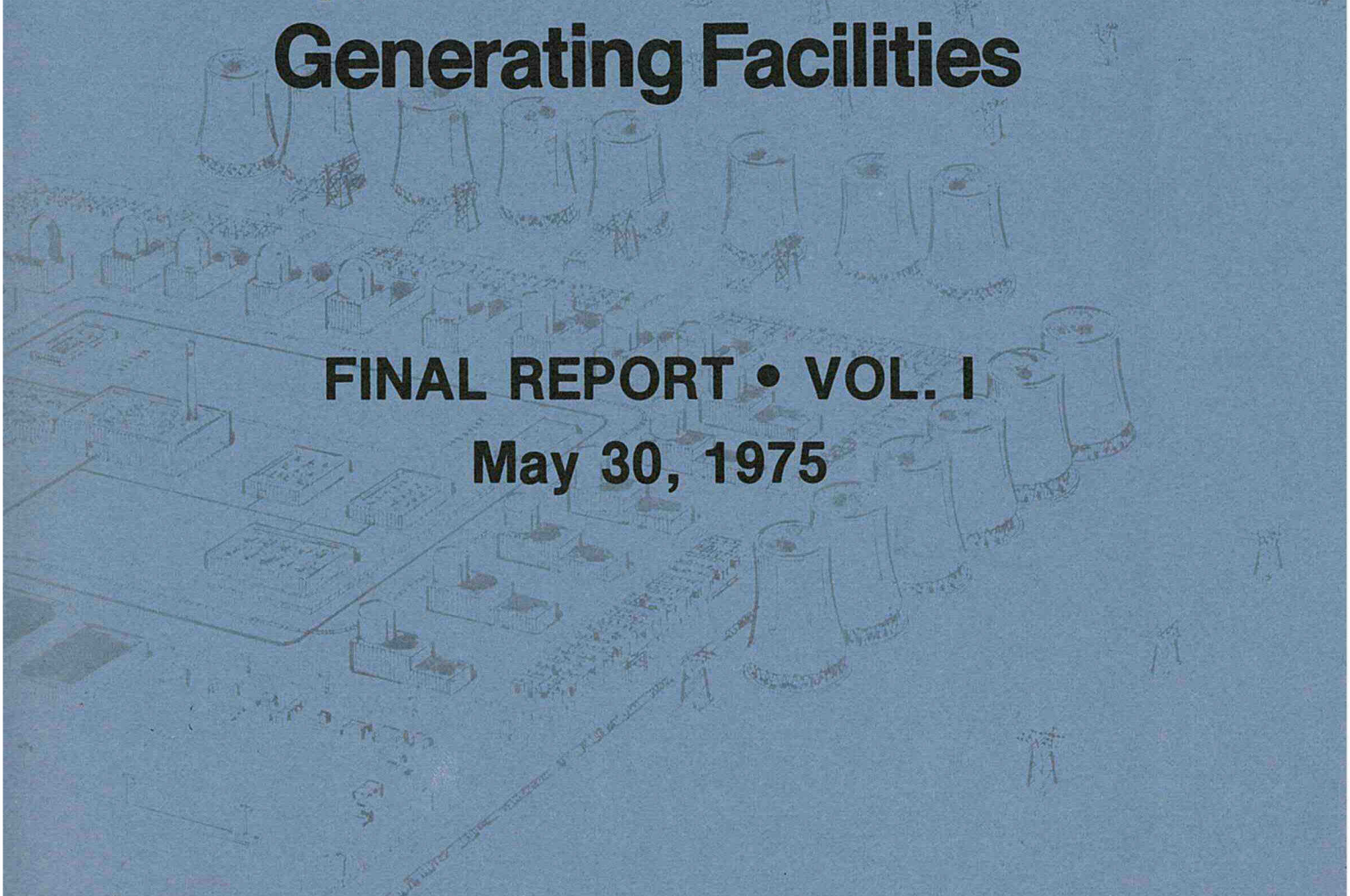

FINAL REPORT • VOL. I

May 30, 1975

Report prepared fore the

OFFICE OF THE SCIENCE ADVISER

Energy R&D Policy Office

Under National Science Foundation Grant OEP74-22625 A01

Any opinions, findings, conclusions or recommendations expressed in this publication are those of the author(s) and do not necessarily reflect the views of the Office of the Science Adviser.

ASSESSMENT OF ENERGY PARKS
VS.
DISPERSED ELECTRIC POWER GENERATING FACILITIES

FINAL REPORT - VOLUME I
May 30, 1975

Supported by:
NATIONAL SCIENCE FOUNDATION GRANT OEP74-22625 A01
Office of Energy Research & Development Policy

Submitted by:
Center for Energy Systems, General Electric Company
777 14th Street, N. W., Washington, D. C. 20005

For sale by the Superintendent of Documents, U.S. Government Printing Office
Washington, D.C. 20402 - Price $17.75 per 2 vol. set (Sold in sets only)
Stock Number 038-000-00230-9

PROJECT PARTICIPANTS AND CONSULTANTS

The General Electric Company personnel working on the project came from several organizations within the Company and operated as a team. The study, organized into nine tasks, involved lead responsibility for one or more tasks as follows:

Project Engineering Operation - Installation and Service Engineering Business Operations - Power Systems Sales Operation

Tasks 1 & 2 - Development of unit size, cost, materials and manpower data and related information and energy park layouts.

Electric Utility Systems Engineering Department - Energy Systems and Technology Division

Task 3 - Transmission. Task 2 - Environmental assessments related to fossil - fired plants. Task 9 - Economic analysis of parks vs. dispersed sites.

Advanced Reactor Studies Group - Nuclear Energy Division

Task 4 - Nuclear plants and fuel cycle.

Industrial Turbine Sales and Engineering Operation - Industrial Sales Division

Task 5 - Industrial collocation.

Center for Energy Systems - Energy Systems and Technology Division

Task 7 - General environmental considerations.

Task 8 - Role and application of advanced technologies.

Project coordination and management

Automation and Control Systems Branch - Corporate Research and Development Center

Task 9 - Parks versus dispersed sites analytical programs and comparisons

Other participating organizations include:

The National Academy of Public Administration

Task 6 - Definition and analysis of major institutional, social, financial, and legal problems evolving from the energy park concept

C. F. Braun & Company

Task 4 - Subcontractor on modular construction of nuclear power centers

Nuclear Services Corporation

Task 4 - Subcontractor on modular construction using steel-water modules for nuclear power centers

The highly valuable aid and advice of other organizations and their staffs is acknowledged and appreciated.

AFL-CIO
Bechtel Corporation
Burlington Northern Railroad
The Chessie System
Foster-Wheeler Energy Company
Ingersoll Rand Corporation
National Aeronautics and Space Administration
Pennsylvania Energy Park Study Team
Tennessee Valley Authority
Yuba Corporation

NSF ENERGY PARK STUDY

FINAL REPORT

TABLE OF CONTENTS

VOLUME I			Page
PROJECT PARTICIPANTS AND CONSULTANTS			i
EXECUTIVE SUMMARY			ES-1
TASKS 1/2 GENERAL INFORMATION FOR ENERGY PARKS			1/2-1
	1/2.1	Introduction	1/2-1
	1/2.2	Summary of Task 1/2	1/2-3
	1/2.3	Selection of Representative Turbine Unit Sizes and Total Site Capacities	1/2-7
		1/2.3.1 General Considerations	1/2-7
		1/2.3.2 Fossil Fueled Systems	1/2-8
	1/2.4	Energy Park Arrangements	1/2-13
		1/2.4.1 General Considerations	1/2-13
		1/2.4.2 Nuclear Park Arrangements	1/2-18
		1/2.4.3 Fossil Park Arrangements	1/2-22
		1/2.4.4 Fold-Out Drawings	1/2-24
	1/2.5	Input Data for Cost Benefit and Sensitivity Analysis	1/2-25
		1/2.5.1 Capital Costs	1/2-26
		1/2.5.2 Operation and Maintenance Costs	1/2-46
		1/2.5.3 Discussion of Capital Costs - Nuclear Units	1/2-48
		1/2.5.4 Discussion of Capital Costs - Fossil Units	1/2-57
		1/2.5.5 Multiple Unit Relative Cost Factors - Nuclear Units	1/2-58
		1/2.5.6 Multiple Unit Relative Cost Factors - Fossil Units	1/2-63
		1/2.5.7 Multiple Unit Relative Cost Factors - Operation and Maintenance	1/2-65
		1/2.5.8 Regional Effects on Cost of Power Plant Construction	1/2-65
		1/2.5.9 Labor Requirements - Nuclear Unit Construction	1/2-70

Page

	1/2.5.10 Labor Requirements - Fossil Unit Construction	1/2-73
	1/2.5.11 Total Labor Requirements	1/2-73
1/2.6	Modularization for Fossil-Fueled Energy Parks	1/2-74
	1/2.6.1 Boiler Modularization	1/2-75
	1/2.6.2 Turbine Room Modularization	1/2-81
	1/2.6.3 Balance of Plant Modularization	1/2-88
	1/2.6.4 On-Site Fabrication Facility Assumptions	1/2-88
	1/2.6.5 Cost Savings from Modularization on Fossil Plants	1/2-89
1/2.7	Environmental Considerations for Fossil Dispersed Sites and Energy Parks	1/2-91
	1/2.7.1 Environmental Standards and Constraints	1/2-91
	1/2.7.2 Flue Gas Desulfurization	1/2-109
	1/2.7.3 Additional Environmental Protection Costs	1/2-118
	1/2.7.4 Appendices	1/2-120
1/2.8	Cooling Mode Considerations	1/2-192
	1/2.8.1 Cooling Ponds	1/2-194
	1/2.8.2 Once-Through Cooling	1/2-196
	1/2.8.3 Evaporative Cooling Towers	1/2-196
	1/2.8.4 Dry Cooling Towers	1/2-200
	1/2.8.5 Dry Cooling Towers with Peak Shaving	1/2-201
	1/2.8.6 Water Consumption	1/2-203
1/2.9	Fossil Fuel Cycle Considerations for Energy Parks and Dual Unit Dispersed Sites	1/2-205
	1/2.9.1 Coal Quantities Required	1/2-205
	1/2.9.2 Coal Costs Assumed	1/2-206
	1/2.9.3 Transportation Modes	1/2-210
	1/2.9.4 Cost Considerations - Low BTU Coals	1/2-225
	1/2.9.5 Conclusions and Research Topics	1/2-225
1/2.10	Reliability, Availability and Plant Capacity Factor Assumptions	1/2-226
1/2.11	Further Research Needs for Energy Parks	1/2-229
1/2.12	References	1/2-231
1/2.13	Appendix	1/2-237
1/2.14	Acknowledgements for Task 1/2	1/2-244

Page

TASK 3 TRANSMISSION 3-1
3.1 Introduction 3-1
3.2 Conclusions 3-2
3.3 Electric Power Delivery Considerations 3-5
3.3.1 Functions of Transmission 3-5
3.3.2 Fundamentals of Power Transmission 3-5
3.3.3 Transmission Planning Consideration 3-6
3.3.4 Choice of Technology 3-12
3.3.5 Critical Design and Operational Factors for Transmission 3-18
3.3.6 Transmission from Park and Dispersed Sites 3-20
3.4 Fitting an Energy Park Into The Expansion of an Electric Power Grid 3-29
3.4.1 Overview 3-29
3.4.2 Generation Expansion 3-29
3.4.3 Network Model 3-30
3.4.4 Generation Siting 3-33
3.4.5 Transmission Expansion Procedure 3-33
3.4.6 Expansion Results 3-36
3.4.7 Incremental Transmission Costs of Parks Versus Dispersed Sites 3-42
3.4.8 Real and Reactive Power Losses 3-42
3.4.9 HVDC Transmission Application 3-45
3.4.10 Conclusions 3-47
3.5 Transmission Costs for Parks Versus Dispersed Sites Comparison 3-48
3.5.1 Overview 3-48
3.5.2 Investment Cost Study 3-50
3.5.3 U.S.A. Energy Park Model 3-56
3.6 References 3-66

TASK 4 NUCLEAR ASPECTS 4-2
4.1 Summary 4-2
4.2 Overview 4-5
4.2.1 Introduction 4-5
4.2.2 Conclusions 4-9
4.2.3 Key Assumptions and Alternates 4-13
4.2.4 Fuel Cycle Integration Alternates and Parks 4-20
4.2.5 The Nuclear Industry and Its Trend Without Parks (Dispersed Mode Expansion) 4-31
4.2.6 Possible Improvement of Nuclear Plant Construction Through Parks 4-34
4.2.7 Remaining Uncertainties and the Future for Parks vs. Dispersed Generation

		Page
4.3	Nuclear Power Reactors	4-48
	4.3.1 Light Water Reactors	4-48
	4.3.2 High Temperature Gas-Cooled Reactor	4-54
	4.3.3 Liquid Metal-Cooled Fast-Neutron Reactor	4-54
4.4	Energy Supply - The Nuclear Fuel Cycle	4-63
	4.4.1 Introduction	4-63
	4.4.2 Background	4-65
	4.4.3 Nuclear Installation Scenarios	4-74
	4.4.4 Facility Siting Relationships	4-82
	4.4.5 Potential Dispersed Site & Park Configurations	4-88
	4.4.6 Fuel Cycles in Typical Parks	4-98
	4.4.7 Summary and Conclusions	4-104
4.5	Nuclear Fuel Reprocessing	4-109
	4.5.1 Introduction	4-109
	4.5.2 Bases and Assumptions -- Fuel Reprocessing	4-121
	4.5.3 Reference Concepts -- Fuel Reprocessing	4-136
	4.5.4 Costs and Schedules -- Fuel Reprocessing	4-143
	4.5.5 Conclusions and Recommendations	4-155
4.6	Nuclear Fuel Fabrication	4-166
	4.6.1 Introduction	4-166
	4.6.2 Bases and Assumptions	4-170
	4.6.3 Reference Concepts	4-175
	4.6.4 Costs and Schedules	4-184
	4.6.5 Conclusions and Recommendations	4-189
4.7	Waste Management	4-195
	4.7.1 Introduction	4-195
	4.7.2 Bases and Assumptions	4-198
	4.7.3 Reference Concepts	4-202
	4.7.4 Costs and Schedules	4-209
	4.7.5 Conclusions and Recommendations	4-212
4.8	Nuclear Fuel and Waste Transportation	4-217
	4.8.1 Introduction	4-217
	4.8.2 Bases and Assumptions	4-220
	4.8.3 References Concepts	4-226
	4.8.4 Transportation Costs	4-232
	4.8.5 Conclusions and Recommendations	4-233

Page

4.9 Environmental Aspects - Nuclear Parks vs. Dispersed Plants 4-236
4.9.1 Primary Factors 4-236
4.9.2 Offsite Exposure Modes 4-241
4.9.3 Environmental Regulations and Trends 4-247
4.9.4 Further Environmental Evaluations and Developments 4-248
4.10 Safeguards Aspects 4-250
4.10.1 Introduction 4-250
4.10.2 Federal Regulations - Safeguards 4-255
4.10.3 Armed Intrusion vs. the MUF Problem for PuB Parks 4-256
4.10.4 Denatured Plutonium Approach to Safeguards 4-257
4.10.5 Specific PuB Park Provisions and Costs for Safeguards 4-259
4.11 Power Plant Costs and Improved Construction 4-262
4.11.1 Introduction 4-262
4.11.2 Reference LWR 4-264
4.11.3 Current LWR Construction 4-274
4.11.4 Park Construction Assumptions 4-284
4.11.5 Modular Construction 4-285
4.11.6 Construction Facilities 4-292
4.11.7 Other Construction Economies 4-299
4.11.8 Conclusions and Recommendations 4-300
4.11.9 Cost Data for Park vs. Dispersed Site Comparison 4-302
Appendix 4.A1 Concrete Modularization Study 4-318
Appendix 4.A2 Steel/Water Module Study 4-365
Appendix 4.A3 Prior Park Studies 4-400
Acknowledgments 4-405
References 4-406

EXECUTIVE SUMMARY

INTRODUCTION

Under a grant from the Office of Energy Research and Development Policy of the National Science Foundation, the General Electric Company carried out a generalized assessment of the energy parks, or energy centers, concept in comparison with the conventional practice of dispersed, distributed siting of electric generating plants. The study was accomplished during the period July 1, 1974 through May 30, 1975 by several General Electric Company components, a select panel of the National Academy of Public Administration, and two engineering subcontractors (C. F. Braun & Co. and Nuclear Services Corporation). Consultation with railroads, labor, utility and engineering organizations provided valuable information and insights reflected in the conclusions and recommendations of this report.

The overall objective of the study was to examine and compare the technical, economic, environmental and institutional issues related to the energy park concept, and to identify the obstacles, benefits, and penalties that would result if the concept were adopted. Concomitant objectives were (1) identify major research and development needs, both technological and institutional, and (2) identify possible approaches to resolution of significant policy issues associated with the energy park concept. The time frame of the study assumes initial generating unit start-up in 1985, and completion of construction about 20 years later.

The reference energy parks of this study consist of either 20 nuclear (light water reactor) units each generating 1300 megawatts-electrical (MWe) for a total of 26,000 MWe or 24 fossil (coal) units, eight each of 885 MWe, 1075 MWe and 1320 MWe for a total of 26,240 MWe. The progressively larger fossil units reflect expected growth in fossil generating facilities during the period covered by the study. The selected total capacities are larger by a factor of four or five than several evolving multi-unit generating plants and represent sizes that should reveal the potential issues, problems and advantages associated with the energy park concept.

The dispersed sites used in the comparative assessments each have roughly one-tenth the capacity of a park (2600 megawatts in nuclear case, 1770-2640 megawatts in coal-fired cases). They are representative of large current power plant installations located near load centers.

The study was undertaken on a non-specific site basis. Energy park and dispersed site locations that are indicated in the report are intended to be illustrative in nature. Only direct comparisons between nuclear parks and nuclear dispersed sites or fossil parks and fossil dispersed sites delivering the same total electrical output are made. No cross-comparison or evaluations between fossil and nuclear generation approaches are intended or attempted.

It should be noted that no conclusions are reached nor intended regarding the number, or size, of energy parks that might be considered for the U. S. It is recognized that there can be alternative ways, not necessarily mutually exclusive, of supplying the electricity needs of different areas or sections of the nation. Any decision reached as to the approach that might be taken under a given set of circumstances is dependent on a broad spectrum of factors, the more significant of which are examined in this study on a generic basis.

A fundamental factor related to the future need for electric generating capacity is the projected requirement for electricity. While it is recognized that such projections are uncertain, complex and even controversial, and require continuing investigation and analysis, no significant attempt was made in this study to carry out such investigation and analysis. Where any particular reference is made to future demands, the projections used are in the range of currently available analyses. In essence, the basic assumption is made that future requirements for electric generating capacity will be such that the concept of energy parks represents an alternative for provision of needed electrical energy.

The study was conducted on the basis of generally current or readily forecasted technology. Recognizing that a number of advanced technological developments could have significant implications in the implementation of energy parks, the possible role of certain advanced technologies in energy park development was addressed in an overall way. The intent was to identify advanced technologies which could reasonably be expected to reach commercial maturity in time for inclusion in first generation energy parks, and to identify those technologies which may warrant more intensive evaluation in subsequent energy park investigations.

An interim report on the study was submitted to the National Science Foundation Office of Energy R&D Policy on October 25, 1974. That report was the basis for a presentation to the NSF Advisory Committee on Energy Facilities Siting on November 20, 1974. This final report attempts to reflect the major points brought out in the discussions of the Advisory Committee. The benefit of those discussions is gratefully acknowledged.

Note is made of continuing investigation and analysis (under Section 207 of the 1974 Energy Reorganization Act) of this subject, particularly by the Nuclear Regulatory Commission. It is believed this current report represents a useful contribution to the existing information on this subject and provides a useful base for needed follow-on work. Such work is clearly required to provide the foundation for sound policy development, planning and decision-making that must accompany consideration of the energy park concept by the government, the electric utility industry and the public.

The study was divided into nine interrelated and coordinated tasks:

Task 1. Development of energy park element data and information, unit planning factors and unit cost models.

Task 2. Energy parks layouts and resources requirements.

Task 3. Analysis of transmission requirements and transmission technology alternatives and evaluation of systems reliability for both parks and dispersed siting.

Task 4. Evaluation of fuel cycle integration in the nuclear energy park concept.

Task 5. Evaluation of the collocation of industry with energy parks.

Task 6. Delineation and analysis of alternative resolutions of major institutional, social, financial, and legal issues associated with the energy park concept.

Task 7. Overall consideration of environmental issues related to energy parks.

Task 8. Consideration of role and relation to advanced technologies to energy parks.

Task 9. Comparative assessment of energy park concept versus conventional dispersed siting of electric power generating plants and associated facilities.

Tables ES-1 through 4 tabulate the salient features and economic results for energy parks and dispersed sites, both fossil and nuclear.

SUMMARY OF MAJOR CONCLUSIONS AND OBSERVATIONS

The following statements comprise the major conclusions and observations resulting from the study.

1. No clear-cut technical or institutional veto to the nuclear energy park concept evolved from the study. The analysis indicates that energy centers are technically feasible (with some question remaining on the potential for adverse meteorological effects) with probable economic and other benefits. Practical issues (principally institutional) exist but should be resolvable with resulting benefits possible. Although some institutional changes are believed to be required to meet future energy requirements, they may be more readily achievable if the nation sets a policy to include energy centers as an approach to electric power generation.

2. Nuclear parks compared to dispersed sites look promising. More detailed and extensive analysis and evaluation on a site-specific basis is justified to more specifically define the difficult problems that have to be solved to successfully implement the concept at a given location. The solution of these problems should not overlook the need to provide some flexibility in design and installation of energy park facilities much like that available on dispersed sites as a result of diversity of generation additions. While such flexibility runs counter to the thrust of standardization, it is believed pratical to plan some flexibility in schedule, equipment and system details without nullifying the overall economic incentive for nuclear parks as found in this study.

3. Use of an on-site factory, and modular, production-line type construction indicates a potential for nuclear generation plant capital cost savings of the order of 25% in the reference park compared to dispersed sites used in the study. Similarly, some savings (5% or

Table ES-1

SUMMARY COMPARISON

NUCLEAR PARK VERSUS DISPERSED SITES

ITEM	UNIT	PARK	DISPERSED SITES	
			Each	Total
Generating Units	No.	20	2	20
Unit Sizes	MWe	1300	1300	---
Generating Capacity	MWe	26000	2600	26000
Land Requirements				
Generation Plant	Acres	1900	500	5000
Heat Rejection System				
Cooling Towers	Acres	4100	410	4100
Cooling Ponds	Acres	39000	3900	39000
Transmission Right of Way*	Acres	67600	2100	21000
Water Requirements				
Cooling Towers	10^6 acre ft/yr	0.28	0.028	0.28
Cooling Ponds	10^6 acre ft/yr	0.35	0.035	0.35
Labor Requirements				
Construction	10^6 man-hours	153	21.4	214
Operation & Maintenance	No. people	1400	175	1750
Unit Construction Time	Months	51	66	---
Transmission Voltage	kV	765	345-765	---
Average Transmission Distance	Miles	175**	25	---

*Related principally to transmission distance.
**Shorter transmission distances are not precluded.

Table ES-2
SUMMARY COMPARISON
COAL-FIRED PARKS VS. DISPERSED SITES

ITEM	UNIT	PARK	DISPERSED SITES	
			Each	Total
Generating Units	No.	24	2	24
Unit sizes*	MWe	885, 1075, 1320*	same*	same*
Generating Capacity	MWe	26240	1770-2640	26240
Land Requirements				
Generation Plant	Acres	1300	450	5400
Heat Rejection System				
Cooling Towers	Acres	2160	180	2160
Cooling Ponds	Acres	26000	2170	26000
Transmission Right of Way	Acres	68200	1750	21000
Fuel Storage	Acres	600	50	600
Waste Disposal	Acres	13400	1120	13400
Water Requirements				
Cooling Towers	10^6 acre-ft. /yr	0.21	0.014-0.021	0.21
Cooling Ponds	10^6 acre-ft. /yr	0.25	0.017-0.025	0.25
Coal**				
Quantity	Tons/day	178,000	14,800	178,000
Unit Trains	No. /day	72	6	72
Average shipping distance	Miles	350	350	350
Labor Requirements				
Construction	10^6 man hours	149.5	14.2-17.6	192.1
Operation & Maintenance	No. people	1900	225	2700
Unit Construction Time	Months	48	51	---
Transmission				
Voltage	kV	765	345-765	---
Average distance	Miles	175	25	---
Wastes**				
SO_2	Tons/yr	680,000	57,000	680,000
Ash	c.f. /yr	3.9×10^8	3.3×10^7	3.9×10^8
Sludge	c.f.	4.5×10^7	3.8×10^7	4.5×10^8

*Unit capacities in parks and dispersed sites progressively increased in three stages
**Based on 75% capacity factor; 3.5% S, 12% ash coal; 80% SO_2 removal

Table ES-3
SUMMARY COMPARISON
NUCLEAR PARK VERSUS DISPERSED SITES
ESCALATED COSTS - $BILLIONS (unless otherwise noted)

ITEM	UNIT	PARK	DISPERSED SITES (10)
Installed Capacity	MWe	26000	26000
Capital Costs			
Generating Plants		27.71	37.03
Transmission		2.99	1.19
Land		.33	.13
Total		31.03	38.35
Total Capital Costs	$/KWe	1195	1475
Total Interest during Construction		5.39	8.16
Revenue Requirements			
Generating Plants		87.47	115.9
Transmission		10.84	4.08
Operation		84.34	81.12
Total		182.65	201.1
Power Production Costs (1985-2005)	mills/KWHR	32-68	30-73

Analysis Bases: Plant Capacity Factor - 75%
Fixed Charge Rate - 16%, Discount Rate 10%
Escalation Rates - 6%/yr. labor, 5%/yr, materials
Interest during construction - 8%
Land inflation rate - 5%/yr.
Average transmission distance - from park - 175 miles
from dispersed sites - 25 miles
Modular construction, on-site factory for park
Cooling tower heat rejection system

Table ES-4
SUMMARY COMPARISON
COAL-FIRED PARKS VS. DISPERSED SITES
ESCALATED COSTS - $BILLIONS (unless otherwise noted)

ITEM	UNIT	PARK	DISPERSED SITES
Installed Capacity	MWe	26240	26240
Capital Costs			
Generating Units		33.86	39.42
Transmission		3.62	1.44
Land		.43	.23
Total		37.91	41.09
Total Capital Costs	$/KWe	1450	1566
Total Interest During Construction		6.15	7.05
Revenue Requirements			
Generating Units		91.35	105.03
Transmission		10.82	4.07
Operation		182.2	182.9
Total		284.37	296.00
Power Production Costs (1985-2005)	mills/KWhr	45-126	41-130

Analysis Bases: Plant Capacity Factor - 75%
Fixed Charge Rate - 16%, Discount Rate - 10%
Escalation Rates - 6%/yr. labor, 5%/yr. materials
Interest during Construction - 8%
Land Inflation Rate - 5%/yr.
Average Transmission Distance - from park - 175 miles
from dispersed sites - 25 miles
Cooling tower heat rejection system

more) are anticipated for smaller sized parks at least down to a 10,000 MWe rating. The importance of standardization of units is emphasized; most particularly that they should all be of one reactor family, LMFBRs, HTGRs, or LWRs. Preferably they should also be of the same design class and rating, i.e., 13,000 MWe BWR/6s, etc., and with the same turbine building and complete plant layout and systems and equipment design. Departure from this level of standardization to provide flexibility beyond that of minor equipment specification change or correction of design errors or construction refinement may well jeopardize relevant portions of the cost economy related to repetitive or learning curve improvements. This would leave only the economies resulting from the move from field conditions to the better working conditions of a shop facility or on-site factory. The major savings which accrue from shifting of construction labor from the field construction site to the on-site modular factory combined with benefits from repetitive work sequences (learning curve) result in an increase in productivity by a factor of 1.5 to 4. While the same standard units (but no modular factory or production line construction) were assumed for the equivalent dispersed sites, indirect costs (e.g., design engineering) would be higher because of the differences in site specific factors related to the balance of plant. Also, the question of construction schedule shortening and labor reduction at succeeding dispersed sites (with standard units) depends on non-quantifiable factors such as similarity of site conditions and availability of previously experienced construction labor and construction management.

4. In terms of total revenue requirements (to the time when the first operational unit is decommissioned, assuming conservatively a 30-year unit life) the 26,000 MWe nuclear park showed about a 10 percent saving over the 10 two-unit dispersed sites of total equivalent capacity. In the coal-fired case, this savings was about three percent and reflects both the degree of modularization already associated with large fossil-fired units, and the use of three successively larger unit capacities (885 MWe, 1075 MWe, 1320 MWe) in the park (and dispersed sites) over the 20-year construction period.

5. The use of a standard unit essentially replicated 20 times over a 15- to 30-year period would involve important considerations of long-term commitments by customer and vendor. The observation that the use of an on-site factory and modular construction is economically beneficial (compared to two-unit dispersed sites) for about six units could alleviate the potential problems of long-term commitments, application of technological improvements and possibly anti-trust considerations. This again implies some flexibility to be achievable both with regard to the number of units and their line sequencing - a somewhat longer interval between plant starts (18-24 months) being more practical than the converse, however.

6. Integration of the nuclear fuel cycle in nuclear parks provides advantages for special nuclear materials safeguards and security in that off-site transportation of these materials would be minimized. The concept of plutonium-burning light water reactors associated with fuel reprocessing and fuel fabrication facilities in an energy park appears promising from the standpoint of coupling with dispersed site LWRs and having all plutonium handling and recycling confined within the park.

7. Transmission of bulk power from the reference park can be achieved with current technology (765 kV AC).

8. To the extent the park is further from the load centers, transmission costs are higher for the park than for the equivalent dispersed sites. An average incremental cost of $14 per kW per 100 miles is indicated for 765 kV AC transmission.

9. The reliability of electric power supply from parks and dispersed sites is comparable.

10. Industrial collocation near nuclear power facilities may be economically beneficial, principally because of the low nuclear fuel costs, compared to fossil fuel costs. The significant requirement is two or more process energy supplying units to assure continuous supply to the collocated industry.

11. Environmental considerations of water supply, air pollution control (coal case), thermal effluent control and climate effects tend to favor dispersed sites. The potential for undesirable climatic effects (e.g., other than small changes in surface temperature, cloudiness and precipitation) requires much more research and analysis on a site-specific basis for adequate assessment.

12. Air pollution control requirements, with current technology, present constraints on the size (capacity) of a coal-fired park. Dependent on the implementation of the "no significant deterioration" regulations under the Clean Air Act a veto on large coal-fired parks is conceivable.

13. Logistical problems of coal supply also appear to present a limitation on the size of a coal-fired park.

14. Among the array of institutional problems that would have to be solved in order to implement the energy park concept, the issue of multi-level government organization that would have to be developed appears the most difficult. The need for regional structures involving federal initiatives and support and major state involvement is strongly indicated.

15. The NAPA Panel noted that at the present stage of investigation into the broad range of institutional considerations, opportunities for potential benefits realizable through the energy park concept appear to outweigh the potential disadvantages by a substantial margin.

16. Initial discussions with union officials indicate a positive labor reaction to the energy park concept. Existing labor "structures" do not preclude implementation of the concept.

17. Strong federal initiatives are essential for implementation of energy parks. The federal government should initiate actions ranging from resolution of nuclear fuel cycle uncertainties to finaicial support and land supply in order to develop "demonstration" parks.

SUMMARY OF REQUIREMENTS FOR FURTHER RESEARCH AND DEVELOPMENT

One of the objectives of the study was to identify requirements for further research and development to advance the energy park concept if the concept appeared viable. During the course of the work, it has become clear that almost every aspect of the concept requires more detailed and extensive analysis and evaluation before the concept could be implemented. It was recognized at the outset of the study, considering the limitations of time and resources available, and the very broad range of technical and institutional issues involved, that such follow-on work would be necessary. The initiation of the extensive Nuclear Energy Center Site Survey by the Nuclear Regulatory Commission as required under Section 207 of the Energy Reorganization Act of 1974 is an important step in this regard. It appears essential that complementary engineering, environmental, policy research and development programs under auspices of the Energy Research and Development Administration, and other federal agencies be carried out to provide an adequate base for future planning and decisions relative to the energy park concept.

Summarized below are the significant follow-on efforts and major research and development requirements identified by the study.

1. The results of this study should be reviewed and critiqued on a detailed basis by selected utilities, federal, state and regional organizations in order to develop more detailed bases for system and site-specific analyses. Such site-specific analyses are essential for a full definition of specific questions associated with a park development and alternative scenarios for such development. This is particularly the case with respect to environmental considerations, but applies also to the whole spectrum of issues associated with the concept.

2. Public interest groups should similarly be involved in such review and critique in order to build adequate public understanding and evaluation of the park concept. The functioning of the NSF Advisory Committee on Energy Facility Siting is a useful initial step in implementing this and the previously noted follow-on activity.

3. More detailed engineering analysis and development related to standardized unit design engineering and manufacture should be carried out. This requirement includes engineering analysis of module design, fabrication and assembly and the design and engineering of the on-site module factory. The potential for savings in utility licensing and construction programs appears high, but the costs and advantages of various siting and construction options need to be better defined.

4. The use of plutonium in converter systems, i.e., plutonium-burning reactors, including both LWRs and HTGRs justifies a research and development effort beginning with design feasibility studies. The potential role of such systems in a park context is of particular significance from the standpoint of minimization of off-site transportation of special nuclear material.

5. There currently exists a high degree of uncertainty regarding the "back end" of the nuclear fuel cycle in terms of demonstrated systems and costs. While a large part of this uncertainty stems from lack of defined regulatory requirements, it is apparent that not only is technical research and development required, but the need for much more extensive federal participation in policy resolution and technology demonstration is intensifying.

6. In the coal area, the study corroborated the need for massive R&D efforts throughout the coal cycle, from mining through conversion to clean fuels and/or clean combustion processes, to coal transportation systems and waste management systems. The coal-fired park concept puts the coal-related problems into much sharper focus, since the development of higher capacity mining techniques, modernization of transportation systems, production of acceptably clean fuel and efficient effluent control systems will strongly control and determine the effective and extensive use of coal for electric power generation, in dispersed sites as well as energy parks.

7. R&D in improved transmission technologies is being carried out through EPRI, ERDA, and other sponsors. While the study did not disclose the need for "technological breakthroughs" in this area, it verified the need for work on high capacity overhead and underground power delivery technologies. These technologies include UHV, ultra-high voltage, overhead systems (1100 kV and above), EHV (345 kV and above) underground systems and HVDC. Research in UHV would enable optimization of delivering systems even at the 765 kV level, just as 765 kV research has improved 500 and 345 kV system design. Development of current-limiting breakers would permit increased electrical interconnection within energy parks, reducing the number of circuits required for reliability. Also, the development of a one-cycle breaker would have specific application to longer transmission lines by allowing increased line loadings without adverse impact on system stability. The need for more extensive analyses of the technical and economic aspects of increased regional interconnections was also indicated.

8. Further analyses are required of a number of considerations related to industry collocation. Included are the impact of collocation on the total utility generating capability required compared to that required if industrials generate by-product power, and transportation of raw materials to and products from collocated industrial operations.

9. Environmentally related R&D has as one of its major thrusts the importance of site-specific information and data to provide the necessary bases for required quantitative evaluation. The study pointed up the need for further work on improved heat rejection systems, including dry towers; multiple cooling tower plume interaction and behavior, interaction of cooling tower plumes with stack effluents and the meteorological aspects of potential climatic effects of large heat releases. The latter area was believed to be of particular significance because of the rudimentary state of knowledge and the potential constraint on energy park location and size it might represent.

10. R&D in advanced energy-related technologies is being pursued on a broad front by a number of government and private organizations. In the context of the energy park concept, those technologies having particular significance include advanced regenerative flue gas desulfurization systems, fluidized-bed coal combustion with in-bed sulfur removal systems and hot gas clean-up as required; clean fuels from coal; low-cost, high capacity hydrogen production and lower cost HVDC terminal equipment. Plutonium-burning in LWRs has been noted previously and its potential in HTGRs should also be investigated.

11. The whole spectrum of institutional issues clearly requires much more intensive policy research, both on a generic and case basis. Further policy analysis on the myriad of institutional issues including alternative governmental and private sector organizational structures, alternative mechanisms for equitable distribution of costs and benefits, the role and impact of an energy park development on community or population center development, and development of labor relations approaches is clearly required. While, as indicated, such further research on a generic basis is important, the possibility of a case approach involving specific existing government institutions in a state or region (e.g., Pennsylvania energy park proposal) and specific utility systems would appear to be of particular value.

12. In carrying out the comparative assessment of energy parks vs. dispersed sites, the desirability of more extensive analyses was indicated. Additional sensitivity and trade-off analyses related to coal transportation modes, heat rejection systems and other factors on a more site-specific basis would be of value. Further treatment of energy park size in relation to modular construction and use of an on-site factory is of interest. Finally, the development of a more comprehensive, overall energy park vs. dispersed sites cost-benefit analysis structure also appeared to be a useful subject for further effort.

TASKS 1 AND 2 - DATA DEVELOPMENT AND SITE CONFIGURATION

Unit sizes of electric power generation and associated equipment used throughout the study were selected to reflect current engineering and manufacturing estimates of the largest, reliable equipment likely to be used in the time period of the study. Cost and quantity estimates for equipment, land, labor, fuel, etc., and likely savings resulting from multiple unit planning and construction were assembled from numerous authoritative reports and company sources, adjusted to a January 1, 1975 cost basis.

The three fossil-fired unit sizes selected (885 MWe, 1075 MWe and 1320 MWe) reflect a balance between reliability of generation equipment and economies of scale of large generating units. Nuclear units, all of 1300 MW, reflect the maximum reactor size permitted by regulatory agencies, and is assumed to remain fixed during the construction planning schedule of this study. Successive units are assumed to become operational at one-year intervals, an intermediate choice between 9-month or 18-month capacity addition schedules that appear reasonable. Natural draft evaporative cooling towers were used for all generating units for comparative evaluations, but costs of other cooling modes are included in the report.

Land requirements for energy park generation sites range from 6000 to 42,000 acres, depending upon the cooling mode and waste disposal requirements. Land requirements for transmission depend directly upon the assumed greater average transmission distances for energy parks and strongly dominate total land needs. Future institutional pressures forcing dispersed generating facilities to more remote locations will diminish the large land and cost penalty associated with long distance power transmission from energy parks.

Savings in labor, material, interest and front-end costs resulting from modular fabrication and construction techniques, quantity purchases of materials and equipment, a more stable labor force, standardization of facility designs, shorter construction times and integrated support and maintenance procedures are assumed. Engineering estimates of the magnitude of those savings are represented by multiple unit relative cost factors for direct and indirect cost elements, and are appropriately applied as multipliers to the costs of second and succeeding units in both dispersed site and energy park analyses. The table below summarizes the factors that were developed and used:

TABLE ES-5. MULTIPLE UNIT RELATIVE COST FACTORS

A. Nuclear Dispersed Sites

Unit No.	Direct Labor	Matl. & Equip.	NSSS*	Indirect
1	1.00	1.00	1.00	1.00
2	0.94	0.95	0.97	0.72

(In the construction of each subsequent dispersed site, these unit factors would be repeated for the first and second units installed.)

B. Nuclear Energy Park

Unit No.	Direct Labor	Matl. & Equip.	NSSS	Indirect
1	1.00	1.00	1.00	1.00
2	0.96	0.93	0.97	0.72
3	0.93	0.91	0.95	0.65
4	0.93	0.90	0.95	0.61
5-20	0.93	0.90	0.95	0.61

(Achievement of these estimates depends upon adoption of standardized plant for all nuclear units. An additional indirect cost of 21.5 million dollars is incurred at the 9th and 15th plant when the on-site factory is moved to facilitate construction.)

C. Fossil Dispersed Sites

	Direct		Indirect	
Unit No.	Labor	Materials	Labor	Materials
1	1.00	1.00	1.00	1.00
2	0.91	0.92	0.60	0.88

(In the construction of each subsequent dispersed site, these unit factors would be repeated for the first and second units installed.)

D. Fossil Energy Park

	Direct		Indirect	
Unit No.	Labor	Materials	Labor	Materials
1	1.00	1.00	1.00	1.00
2	0.88	0.91	0.75	0.89
3	0.85	0.86	0.65	0.98
4	0.80	0.82	0.60	0.67
5-8	0.77	0.80	0.60	0.60

(Eight, each of three different sizes of fossil units, are proposed - 885 MWe, 1075 MWe and 1320 MWe. The cited relative cost factors are effectively repeated for each group of eight units installed.)

*NSSS = Nuclear Steam Supply System

In the case of fossil parks, there appear to be major problems with regard to fuel supply, waste disposal and environmental impact. Large fossil energy parks requiring on the order of 65 million tons of coal per year may be impractical because of the logistical limitations in handling fuel and waste materials. The latter (sludge and ash) could total 750 million tons over the park lifetime if non-regenerative stack gas scrubber systems are installed to remove sulfur from effluent gases. All modes of bulk material transport must be improved or developed to handle the coal, scrubber feed and waste products. The large capital investments required for fuels and materials transport are not included in the reported costs for fossil parks.

Two basic sets of EPA air standards apply - ambient air quality and national emission standards. Most can be met by large fossil energy parks, except for the significant constraint represented by short-term sulfur dioxide emissions. For each unit, sulfur dioxide must be reduced 60-80% below emission standards (98% scrubber efficiencies) before the park as a whole can fully meet air quality standards.

These considerations indicate that the optimum size of a fossil-fueled energy park will be smaller than 26,240 MW, but larger than two unit 2640 MW installations. Construction economies resulting from on-site modular fabrication and incremental cost efficiencies of multiple unit construction factors appear to be obtainable in smaller fossil installations. Additional optimization analyses seem appropriate to take advantage of these results whether or not the utility industry adopts the large fossil energy park concept.

TASK 3 - ELECTRICAL TRANSMISSION

There appear to be no technical problems preventing power delivery from energy parks. Energy park generating units will probably be grouped into three to five electrically isolated power sources to limit short circuit currents to controllable levels. Overhead transmission would require nine to fifteen 765 kV AC circuits, judged to be the most economical voltage level for the 175 mile average transmission distance derived in this study.

The physical and electrical separation of power sources, switchyards and transmission circuits can restrict electrical power disruptions to single units, transmission lines or generation groups under all reasonably probable conditions of electrical faults. Since each 765 kV transmission circuit can handle over 5000 megawatts of

generating capacity, the provision of dual 765 kV circuits for each generating unit group and the ability to connect various switchyards in the energy park, if desired, promises power delivery reliability at least equal to dispersed siting of equal capacity.

As energy parks develop, total regional electrical generation capacity is similarly expected to grow. The loss of an entire power group (5200 MWe) in an energy park in 2000 AD would present about the same manageable power redistribution problem, in terms of percentage power loss as we experience today. Though the absolute magnitude of the power loss would be greater, the relative loss within the power distribution region should be below expected generating reserve capabilities.

Remote siting of power generating facilities, whether in energy parks or dispersed sites, imposes an additional cost of about $14 per kW for each 100 miles of transmission distance. This study assumes remote location of energy parks compared with dispersed sites (175 miles vs. 25 miles average transmission distances). The additional transmission costs charged to energy parks is associated directly with the different assumed transmission distances, rather than differences in technology or equipment. Alternate transmission technologies such as HVDC, cryogenic cables and submarine cables along existing waterways will have negligible impact on the economic comparisons at the transmission distances assumed. However, land area savings up to 36% in transmission right-of-way may be possible with HVDC; but higher terminal costs tend to overcome the lower land costs at these shorter transmission distances.

Any improvements in power transmission technology will have a beneficial impact if remote siting is assumed. One-cycle versus two-cycle circuit breakers, which would allow increased transmission line loading, and current-limiting breakers, which reduce the number of lines required by a park, are two important technological developments that would benefit energy parks.

On the whole, the transmission system advantages all accrue to close-in siting of electrical generating facilities. If energy parks are judged desirable for other reasons (safety, cost, etc.) no significant technical problems would preclude reliable electrical transmission service from parks.

TASK 4 - NUCLEAR ASPECTS

The presently developing U. S. nuclear industry is reviewed as representative of dispersed mode generation and support facilities. It is reviewed in the light of recent regulatory developments, a continuing unclosed fuel cycle (no plutonium recycle), and a continuing rise in construction costs in particular. Those aspects of the nuclear industry which could potentially be affected by adoption of park or integrated facility development in the future and the impact of plutonium recycle concepts are identified and the more pivotal of these evaluated. The assessment is conducted recognizing the importance of integrating any potential future park type development with the presently existing and concurrently developed dispersed mode. The evaluation is encumbered by the long time scale for implementation of parks, typically through the year 2015! This makes for great uncertainty and the need for maximum flexibility in any park plans.

Two positive aspects of parks as an alternate to dispersed generation appear to be the potential for closing and integrating portions of the fuel cycle, and the possibilities for significant construction economies in multi-unit light water reactor (LWR) facilities. Less clearly definable impacts include the effects on nuclear facility licensing, site acquisition, facility ownership and operating organization structure. These predominantly socio-financial issues have been pursued in some depth in Task 6 of this study.

The conclusions of this task are that ultimately substantial benefit to the nuclear fuel cycle and easing of the safeguards problem might be derived from integration of spent fuel recovery and plutonium fabrication facilities at one site.

Still further benefit might be gained by the planned introduction of dedicated "plutonium burner" or PuB type reactor parks with integral reprocessing facilities, to operate in conjunction with existing and planned dispersed power generation facilities in the same region or powershed. All plutonium handling and recycle would then be contained within the park. No minimum feasible size for the proposed PuB park has been identified; however, a four-unit LWR site ($\sim$5000 megawatts electrical, MWe) coupled with a 500 metric tonne* per year, (MT/yr) reprocessing facility and 10 to 15 nearby dispersed site LWRs has been appraised. Total capital commitments at a single four-unit PuB site might be held to under $3 billion in 1975 dollars.

*MT = metric tonne = 1000 kg = 2205 lb

Fuel processing costs in facilities with capacities of 500 to 1500 metric tonnes per year do not significantly decrease (less than 0.5 mills/kWh) as the facility size increases. There may, however, be an undesirable penalty in the loss of siting flexibility and restriction of diversity if only large reprocessing facilities receive regulatory sanction. On the other hand, major construction economies may only be attainable in large standardized and integrated parks. Flexibility and security may be achieved through an initial (1975-1985) commitment to spent fuel storage, with other stages of recovery, PuB reactor construction, and plutonium recycle to follow as a result of active research and development of back-end fuel cycle problems during the immediate future. However, the need for clearly defined government policies, goals and commitments regarding the fuel cycle are important on a timely basis so that rational industry planning can be carried out in the very near future.

Follow-on program requirements have been identified and include more rigorous site- and system-specific studies, particularly modular construction economies, and in-depth technical analysis of the LWR plutonium burner concept and its detailed economic and safeguards worth.

Further definition of the many current regulatory uncertainties and in-depth appraisal of the true magnitude of various elements of the presently perceived safeguards threat are also necessary, particularly as organized pilfer, while less spectacular than armed intrusion, is suggested as potentially a more significant possibility.

On the whole, there appear to be no technical problems preventing the construction of nuclear parks using essentially the same approach as that developed for dispersed generation. They may require additional waste processing capability to handle the combination of power generation and fuel cycle facilities to meet site "as low as practicable" (ALAP)* environmental requirements. No unique reactor safety interaction problems between units are foreseen.

TASK 5 - INDUSTRIAL COLLOCATION

The evaluation of the economics of collocation was based on energy needs defined for the following industries: pulp and paper, chemical, petroleum refining, petrochemical and steel. These industries consume large quantities of energy in the form of process steam, electrical power and, in some instances, fossil fuel for

*New regulatory requirements with specific provisions for multiple unit sites now being developed by NRC (ALAR concept).

combustion in process. Data was gathered to define the quantity and type of energy required, and economic comparisons between utility and industrial heat sources were accomplished. For industrials requiring large amounts of direct process heat, heat required above 800 F and usually in the 1600 F to 3000 F range, utilities do not appear to be able to provide the energy levels required, even with high temperature gas cooled reactor systems.

Potential utility steam sources not requiring major modifications of turbogenerator units were found capable of providing extraction steam at pressures and temperatures suitable for all of the candidate collocated industries. Economic comparison with industrial in-plant power generation indicates utility steam supply might be advantageous for plants having small process steam demands at at pressures in excess of 200 psig. Lower pressure requirements are more economically satsified by industrial self-generation.

Of the fossil-fueled alternatives, industrial generation of electricity using non-condensing steam-turbine generators and subsequent process applications of exhaust steam is more economically attractive than simple steam pressure reduction to process steam requirements.

Some economic benefits are obtainable from industrial collocation with nuclear sites, primarily as a result of low nuclear fuel costs relative to the cost of fossil fuels. Additional isolation and control equipment associated with nuclear steam supply systems add some currently indefinable cost and operating penalities that were not completely assessed.

In addition to comparisons of tangible cost factors, other parameters associated with industrial collocation require simultaneous consideration:

1. The ability to construct a large industrial complex at the same time and place as the utility construction.

2. The added environmental impact of collocated heavy industries.

3. The added transportation requirements (raw materials, finished products, etc.) to support industrial operations.

4. The impact of collocated power demands on total utility power generation and delivery capabilities.

TASK 6 - INSTITUTIONAL ISSUES

The institutional issues associated with the energy park concept in comparison with conventional dispersed siting present a broad spectrum of highly complex, interrelated questions of organizational mechanisms, regulation, financial and socio-political factors involving both the public and private sectors. While resolution of these issues appear to represent the most formidable obstacles to implementation of the energy park concept, none were deemed insurmountable.

The observations and conclusions resulting from the work by the National Academy of Public Administration (NAPA) Panel are those of the Panel. They have not been edited by the General Electric Company and GE does not necessarily share all of the views expressed by the Panel.

The NAPA Panel (see Task 6 in the report for membership) divided its assignments into five subject areas: governmental organization, regulation, organization for electric energy supply, finance and socio-political aspects.

In the governmental organizational area, the Panel observed that the framework of existing governmental institutions is inadequate for the rational development of new electric energy supplies whether by conventional dispersed facilities or through parks. The need was identified for an agency at the federal level with clear responsibility and authority for resolving the problems of meeting the nation's energy needs. The implementation of the energy park concept, with its inherent ability to serve multi-state service areas, will require a meshing of federal, state and local government in a more effective process than any yet devised and requires the leadership of a federal energy agency referred to above. While no exact or uniquely suitable models of intergovernmental arrangements were revealed, the development of appropriate inter-state compacts, with probably required support from the federal government, appeared to be one reasonable approach. A park established under such a compact might be wholly privately financed and owned, wholly publicly financed and owned, or financed and owned by mixed public and private interests.

Much more extensive and detailed policy research and analysis is required in this area, including, for example, consideration of the relative roles of federal authority and responsibility and state public service commissions.

Institutional and public policy issues related to economic growth and natural resource use are integrally related to the development of future electric energy supply systems. The essentiality of an increasing electric energy supply for a growing economy must be recognized. At the same time, the detailed nature of the energy-economy coupling needs further continuing examination taking into account the undesirable and unnecessary risks of unrestrained and wasteful consumption of resources.

In the light of the increasing trend towards comprehensive land use planning, early identification of electric generating facilities and transmission corridor siting will be necessary. Such site selection should become a joint responsibility of the electric utility industry and the appropriate government authorities from the beginning. The siting of energy parks involves land use decisions at higher than local levels. Here, once again, the need for a multi-state, regional, institutional mechanism that can balance all competing demands for area resources is indicated.

In the regulatory area, the need for elimination or reduction of overlapping and duplicative jurisdiction and regulatory authority and responsibility at both federal and state levels among various agencies was identified. This need is independent of the park vs. dispersed site comparison. In the case of nuclear plants, the situation was deemed particularly complicated. To simplify the present structure and licensing process, consideration should be given to (a) elimination of hearings, except when requested, on a construction permit application, (b) the substitution of rule-making or legislative-type hearings for adjudicatory hearings, and (c) restrictions on the right of intervention with a corollary that an adequately staffed "watchdog" office be established within NRC to monitor and critically review performance of the staff. The Panel did not suggest any limitations be placed on the right of judicial review.

From a regulatory and licensing standpoint, the park concept appears to offer the possibility of an improved process in comparison to dispersed sites. While the initial phase of the process would be more difficult, since the total park development would have to be considered at the outset, the process with respect to subsequent units to be installed at the park presumably would be much simpler.

The Panel believes that consideration should be given to adjustment in the organizational structure of the electric utility industry to more effectively meet the nation's electric power needs.

Although the major share of the nation's power capacity is private- or investor-owned, the industry includes a varied array of cooperatives, municipals, special districts, several state systems, and a number of federal agencies. This diversity of institutions is expected to continue, but some combination in an energy park appears possible or likely under certain circumstances.

For utilities seeking to develop an energy park, the most feasible corporate form would appear to be a jointly-owned generation and/or transmission operating company in which the utilities own shares in the new company in proportion to their share of the park's output. Irrespective of the park vs. dispersed sites comparison, there is a growing recognition of the advantages of provision of bulk power supply under large regional organizations. The energy park concept is particularly dependent on such regional management systems.

While it is emphasized that the questions related to organizational structure on the supply side require more intensive study, it seems clear that an increasing role for the federal government in any development of energy parks is likely.

The current outlook for the utility industry as it seeks to finance plants to meet future needs tends to conclude that, unless there is a change, private financing of energy parks would be extremely difficult. It is generally anticipated that nearly two-thirds of needed funds will have to be raised in capital markets. In the financial atmosphere prevailing today, this does not appear possible. Hopefully, this atmosphere will not continue over the long term.

Indeed, government involvement, especially at the federal level, will likely be required to support the private sector in future electrical generating facility development. Such government support could take the form of facilitating favorable interest rates, modification in the tax laws to provide incentive for capital flow or even government building of plant with lease-back to the industry for operation.

Socio-political considerations in the energy park concept may well be a critical determinant of the ultimate viability of the energy park concept. Among the key socio-political factors which may be affected by an energy park are: population distribution, community relations, regional economic conditions, regional political and economic power structures and labor relations. The Panel's

studies of issues connected with these factors did not surface any indicators which would serve as an automatic veto of the energy park concept. Indeed, the studies indicated a number of potential benefits that might be derived from the systematic planning that would be essential to energy park implementation. For example, the energy park could be a vehicle for achieving desirable ends in the distribution of population, well-planned land use and environmental protection. Again, the need for site-specific analyses is noted, as well as more detailed and comprehensive research required in this area. In particular, the need for further inquiry into the rationales and equity bases, and political mechanisms to allocate properly the costs and benefits of such a major undertaking as an energy park is pointed out.

The issue of "fairness" in the allocation of costs and benefits associated with an energy park development was identified as an important area requiring further study on a location specific basis. While the issue exists for both parks and dispersed sites, its dimensions in the park case are larger and more complex. Equity in taxes on large generation and transmission facilities with regional ramifications, and distribution of tax revenues is but one example of the issue area. The allocative mechanisms required to perform such functions equitably obviously have political and social implications which may well call for new rationales and procedures.

The possibility of a long-term, stable labor force particularly in connection with energy park construction has generally positive implications. This was observed through exploratory discussions with labor union officials.

Anti-trust issues of a monopoly and monopsony (single purchaser) nature bearing on the energy park concept have been examined. In the nuclear case, anti-trust review by the NRC will include the access of competitors to the generation capacity and associated transmission facilities. Although anti-trust questions are inherent in an energy park undertaking, it appears that they can be handled within the context of anti-trust law.

The question of effect of personal security requirements associated with an energy park on civil liberties was noted. It is believed that, while care must be taken not to infringe on the civil rights of persons either directly or indirectly with an energy park project, this question can be handled in an acceptable manner, both with respect to individual civil rights and security needs. The question is applicable to both parks and dispersed sites. In the case of nuclear parks with fuel cycle integration, the more effective physical security possible

would appear to offer possible advantages over equivalent dispersed sites. A smaller number of people likely would require security clearance for direct access to sensitive operations, and perhaps more sophisticated physical security systems associated with a large park installation could reduce the extent to which surveillance of individual activity would be required. While no detailed assessment of security separation of construction areas and sensitive operating area was attempted, it is believed feasible to provide effective separation to minimize the number of security cleared individuals requiring security clearance and access to the operating or sensitive areas of the park site.

It might be noted that in informal discussions with labor union officials they saw no significant problems in connection with worker security clearances in relation to conditions of employment or unacceptable impact on individual civil rights.

From an overall institutional perspective, the Panel concluded that there appears to be sound argument for further consideration of the energy park concept as one approach to the development of electric generating capacity. The Panel further noted that at the present stage of investigation into the broad range of institutional considerations, opportunities for potential benefits realizable through the energy park concept appear to outweigh the potential disadvantages by a substantial margin. The need for more thorough study and evaluation in many of these institutional areas is emphasized.

TASK 7 - ENVIRONMENTAL OVERVIEW

Five major, overall environmentally related considerations of energy parks vs. dispersed sites were addressed. They were (1) land use aspects, (2) water supply availability, (3) air pollution control, (4) thermal effluent control, and (5) climatic effects. On a park vs. dispersed sites comparative basis, the general observation is made that issues in all of these areas tend in the direction of dispersed sites. This tendency is due primarily to the larger quantities of resources required at concentrated locations (land and water) and the larger quantities of effluents and rejected heat at a single site associated with the park concept. However, this observation should not be construed as an insurmountable obstacle

to energy park implementation. For example, in the area of effluent control, particularly in the nuclear fuel cycle, the concept of "concentrate and contain" coincident with the park presents the possibility of overall reduced environmental impact in comparison to what might be loosely characterized as a "dilute and disperse" situation associated with dispersed sites.

Total land requirements for equivalent generating capacity are smaller in the park case. This advantage is likely to be overridden by increased transmission right-of-way requirements with the park due to its likely increased distance from load centers. From a land use planning standpoint the larger in size, but smaller in number of sites required represents a possible advantage in the park case. It is clear that the environmental and land use issue are becoming increasingly and inextricably tied together. Further, the land use planning and policy framework at various government levels is an increasingly important arena in which environmental issues will be debated and decided.

The large quantities of water for consumptive use at a single location for an energy park (200,000-350,000 acre feet per year for the reference 26,000 MWe park depending on cooling mode) may well represent a significant constraint to park development at single specific locations. The overall estimated requirements for water for electric power generation of about 10 to 11 million acre feet per year (maf/yr.) by 1985 are estimated to be about 9 to 10 percent of the total consumptive use at that time. On this basis, plus the fact that total streamflow in the U. S. is about 1350 maf/yr., one might casually observe that physical availability of water is no problem. However, because of the site-specific nature of the water supply availability issue, one cannot arrive at specific conclusions on the basis of generalized assessments nor can one draw any general conclusions from conditions at a specific situation.

The institutional situation related to water, particularly in the West, is highly complex. It involves compact agreements, water rights, allocation and allotments and laws that must be recognized in planning and development of water supply for electric power generation. Because of these institutional complexities and

the lead times associated with water development it is essential that planning horizons for water for energy be extended to the year 2000 and beyond. Concomitantly, it is essential that such planning be done on a coordinated basis with heavy involvement of state governments and on a specific basis in relation to identified energy development proposals and water sources.

Issues related to air pollution control relate heavily to coal-fired parks and dispersed sites. The independent requirements, under the Clean Air Act and the associated State Implementation Plans, to meet ambient air quality standards and source emission standards plus the requirements for "no significant deterioration" present significant constraints on the coal-fired park. Depending on future interpretations and implementation of "no significant deterioration" regulations even the viability of the coal-fired park may be called into question. These regulations may well be used as a vehicle or mechanism for land use zoning. The development of systems for cleaning coal, clean combustion of coal and advanced flue gas desulfurization is strongly justified not only to minimize the constraints referred to above, but also to enable more effective use of our coal resources for electric power generation generally.

Provisions of the 1972 Amendment to the Federal Water Pollution Control Act would appear to preclude, for the most part, once-through cooling for large electric generating plants. Accordingly, closed cycle cooling systems using ponds, wet or dry cooling towers or combinations will, except possibly under unique circumstances, be a feature of an energy park. This does increase the consumptive use of water (except where dry cooling towers may be used in spite of penalties in cost and plant efficiency) and under some circumstances the environmental trade-offs between increased water consumption and higher temperatures in receiving bodies of water might have to be considered.

Cooling system technologies, as indicated above, are available for application to parks or dispersed sites. In terms of environmental impacts of the various cooling systems it appears that wet-dry tower or wet tower-pond combinations could be satisfactory in either moist or dry climates. Development of more effective and efficient heat rejection systems, including dry towers, is justified.

The climatic effects resulting from the rejection of large quantities of heat from an energy park may, in some circumstances, be a size-limiting environmental impact. The specific climatic effects of interest are (1) increased cloudiness, (2) reduced visibility or fogging, (3) increase in surface temperature, (4) increase or modification of

precipitation patterns, and (5) possible initiation of severe local weather phenomena. In the reference nuclear park of 26,000 MWe with a 33% overall thermal efficiency roughly 50,000 MW of thermal energy would be rejected. If the cycle efficiency were about 40% (e.g., HTGR or fossil units) the heat to be rejected from a park of reference capacity would be reduced to about 39,000 MW. The climatic effects noted are dependent on the quantity and rate of heat rejection, the nature and configuration of the heat rejection system and the site-related meteorology. Heat releases of this order of magnitude are comparable to natural energy-related phenomena such as thunderstorms and squall lines. Accordingly, it is suggested that the scalar level of direct or noticeable meteorological effects might be comparable to these natural phenomena, i.e., in the order of 10 to 20 miles. It is not accurate to compare the heat releases from an energy park of the size magnitude considered within the urban heat island situation because of the greater heat flux per unit of area associated with the energy park heat rejection systems. On a park using an evaporative cooling system, there are additions of both heat and moisture, while in the urban heat island situation there is generally a moisture deficiency in relation to the ambient atmosphere. In general, it can be observed that energy parks in the range of capacity considered, and depending on the heat rejection system and its configuration, might well result in climatic effects (a few degrees increase in surface temperature, a small percentage increase in cloudiness and minor increases in precipitation) that may be noticeable within the variations of local and even regional climates. Quantitative estimates are dependent on the specifics of heat rejection system design and site-specific meteorologic factors. Such effects at these levels would appear to be generally environmentally acceptable, but it is not clear that this would be so.

The question of whether or not in certain unstable meteorological conditions the heat release from an energy park could initiate more severe meteorological phenomena such as waterspouts or tornadoes involves the ability of large energy sources to concentrate large scale vorticity into a strong vortex. Based on developed but untested criteria, it is clear that such possibilities must be carefully examined on the basis of site-specific factors. Further research and analysis in the area of climatic effects of large heat releases is a priority requirement.

Although specific considerations of nuclear plant safety were not included in the scope of this study, the existence of a number of controversial issues regarding the safety-environment-public health aspects of nuclear power generation is recognized. From a public acceptance standpoint the major of these issues are (1) potential releases of large quantities of radioactive materials as a result of a postulated major

accident, (2) control of plutonium and other radioactive materials, and (3) the ultimate disposal or long-term management of spent fuel reprocessing wastes. Reasonably well identified control technology can be and is being applied to cope with these issues to adequately protect the health and safety of the public. In relation to potential radiologic impact, the park concept, while involving larger total quantities of radioactive materials, would appear to enable even more effective control of these materials through improved, centralized operation by better trained and specialized personnel, availability of specialized equipment and application of more sophisticated control technology.

The nuclear park would also appear to have an advantage over dispersed sites with respect to nuclear plant decommissioning. A smaller number of locations would have to be dedicated to possible long-term storage of radioactive materials. Also specialized crews and equipment justified at a park could more effectively carry out such operations on a production-line basis.

The important role of an appropriate, continuing environmental monitoring program in connection with the development of an energy park is noted. Such a program would provide timely recognition of undesirable environmental impact or potentially adverse, irreversible environmental effects which may not have been fully defined in the park environmental impact assessment. Should circumstances dictate, park development could be curtailed before such situations developed.

TASK 8 - ADVANCED TECHNOLOGY

Adoption of new sophisticated technology on a significant commercial scale historically takes at least 10-20 years following initial demonstration of concept. First generation energy parks appear to depend largely upon currently available technology and those new concepts demonstrated in performance and reliability by about 1980. Later development on even more sophisticated systems will most likely be introduced as single facilities, before they are selected for construction as multiple standardized units in an energy park.

Near-term candidate technologies that appear likely to be available, if not necessary, by 1985 include regenerative flue gas desulfurization systems, chemically cleaned fossil fuel, slurried coal pipeline systems, energy storage systems of various kinds, high voltage DC transmission systems and evolutionary changes in current systems, e.g., plutonium-fueled light water reactors. The emphasis on fossil fuel technology highlights the immediate problems associated with expanded use of U. S. coal resources, and the long technology licensing and integration times for new nuclear systems.

Underground cooled transmission systems, fossil superheating of nuclear steam supply systems and high temperature gas-cooled reactors are possible candidates for expanded commercial utilization in the 1985-1990 time period. Higher transmission and fuel utilization efficiencies are potentially achieveable but in spite of the success of significant demonstration of these technologies, widespread commercial adoption has not been clearly evident.

Longer range technology more likely to be considered in second and third generation energy park plans include fluidized-bed combustion, coal gasification and liquefaction, hydrogen production and very high temperature nuclear reactor systems. Demonstrations of these technologies at 1000 MWe equivalent capacities appear possible in the 1983-1987 time period, but large-scale multiple unit construction commitments to achieve energy park economic benefits do not appear likely. Established energy parks could provide logical sites for initial installation of advanced facilities, but the total park design and economic assessment will not likely be predicated on projected technological achievements. The nuclear breeder program (LMFBR) in particular fits this pattern - breeder reactors planned for operation in 1990 could be located in and provide the plutonium burner function in a nuclear energy park, and take advantage of the physical characteristics and facilities that an energy park would already possess.

Low temperature reject heat utilization projects of great variety have been proposed and are being studied, but none appear to impact significantly on cooling requirements of utility plants nor do the heat requirements for such applications involve more than an insignificant fraction of the heat available. The major constraint is cost of distributing the low quality heat as compared to the value of produced goods.

Combined desalinization projects for power plant cooling and agricultural irrigation may be economically feasible for energy parks. Sea or brackish water pumping costs apportioned among end uses for water might make arid areas suitable for both energy production sites and land reclamation projects.

In general, first generation energy park planning and construction (1985 start-up) appears to depend largely upon current and very near-term technologies. Developing energy park sites could provide highly advantageous locations for introduction of new technologies which supplement planned energy park power production capabilities. The accelerated development of a low cost, high capacity hydrogen production technology could advantageously promote conversion of coal resources to clean, transportable fuels compatible with existing distribution and conversion systems. The projected energy availability of a park suggests the beneficial integration of energy parks and hydrogen production.

TASK 9 - COMPARATIVE ASSESSMENT

An economic analysis of cost parameters was accomplished using a computer program specifically developed for the comparative assessment of energy parks versus dispersed sites. Three different base cases were selected for detailed analysis:

1. A 20 unit, 26,000 MWe nuclear energy park versus 10 dispersed nuclear sites, each consisting of two 1300 MWe generating units.

2. A 4 unit, 5200 MWe "mini" nuclear energy park versus two dispersed nuclear sites, each consisting of two 1300 MWe generating units.

3. A 24 unit, 26,240 MWe fossil energy park versus 12 dispersed fossil sites, four each with two 885 MWe, 1075 MWe or 1320 MWe generating units.

Economic data developed in Tasks 1/2, 3 and 4 were consolidated, and calculations of capital costs, revenue requirements, cash flow were accomplished. The total period of analysis included the three or four years prior to the start of construction when land and planning expenses were incurred through the time of decommissioning of the first installed power unit, assuming a generating lifetime of 30 years.

In the case of large nuclear parks (26,000 MWe), a 10% savings in total revenue requirements, representing a net cost saving of 18.5 billion dollars (January 1, 1975 dollars), appeared possible for an energy park as compared to dispersed siting of the same total generating capacity. The largest portion of the savings is due to the transfer of labor to the module assembly facility. Expected productivity improvements result in labor and construction time savings which significantly diminish the fixed costs associated with capital investment. The cost of the factory and related facilities is more than offset by savings in generating unit capital costs. An important assumption for realization of all of the estimated cost savings is the standardization of the reactor system and the balance of plant. Although the same units were assumed for the park and dispersed sites, applying the same degree of standardization to 10 dispersed sites does not appear equally possible because of different site-dependent considerations (terrain, seismic conditions, location of water supply, etc.). The principal economic disadvantage

of the large energy park is attributable to the high transmission land and equipment costs resulting from the assumption of a longer transmission distance (175 miles) for the park as compared to the dispersed sites (25 miles).

A similar comparative assessment of a 4 unit nuclear "mini" park which does not include an on-site modular factory indicated the potential for a 6% saving (about 200 million 1975 dollars). The principal savings are attributable to the lower capital costs of the third and fourth standard units at the park site relative to the installation of comparable units at a second dispersed site. The possibility of obtaining similar savings in the construction of several identical dispersed sites depends on a number of unassessed factors:

1. Similar site characteristics and conditions.

2. Transfer of a large portion of site management experience.

3. Transfer of a large portion of an experienced labor crew from a previously constructed site.

4. Labor productivity during transfer.

5. Incremental transmission system required.

Results of comparisons of large fossil energy parks with equivalent capacity dispersed fossil sites indicate potential savings of about 3% for a park (approximately 7.7 billion 1975 dollars). The opportunities for construction cost savings related to use of an on-site factory appear lower for fossil units because of the higher degree of modularization already practiced in the industry and the lower on-site construction requirements for fossil plants. The additional assumption of the use of three different fossil unit sizes as compared to one standardized unit in the nuclear park assessment significantly changes the economic advantage of park construction. Use of different (non-standardized) nuclear units in response to regulatory or technology changes would decrease the large nuclear park advantage noted earlier. Some changes in the nuclear units may be tolerable at those construction phases when the on-site factory must be relocated. A specific assessment of the loss in construction benefits versus the degree of acceptable changes is necessary to fully resolve this issue, but the general trend is indicated by the fossil park analysis.

To evaluate the effect of variations in the engineering and economic estimates developed for the base case assessments, sensitivity analysis of the critical input parameters were accomplished. A full table of the parameters assessed is included in Task 9 of the report, but of all the parameters analyzed only the multiple unit relative cost factors, power transmission distance and coal transportation distance appeared to significantly impact the comparative results. In all analyses, the differential revenue requirements (park minus equivalent dispersed sites) varied significantly as multiple unit factors were varied from 25% to 75% of the base case values. In the nuclear park analysis, successive unit savings could be reduced to about one-third of the estimated values before park and dispersed site costs became equal. For fossil parks, however, multiple unit cost savings can only be reduced to about 70% of their initial values before park cost advantages vanished. Here again the effect of standardized versus non-standardized units becomes important in evaluating overall economic advantages.

Transmission distances critically impact on the economic benefits of energy parks. Varying the average energy park transmission distance between 75 and 275 miles, keeping all other parameters constant, changes a 16% advantage in revenue requirements of a park to only a 4% total advantage. Because transmission distances are so site-specific, the critical economic impact of power transmission can only be highlighted, but not resolved, in this generic study.

Coal transportation costs turn out to be highly sensitive in the economic comparisons of fossil generation concepts. Increasing coal transportation distance from 350 to 700 miles (assuming large quantity fuel shipments from extensive coal supplies to comparatively remote fossil energy parks) completely reverses the cost advantage. Differential revenue requirements indicated a 7.7 billion dollar advantage for a large fossil park when coal was shipped 350 miles, but a 7.3 billion dollar disadvantage when coal had to be obtained from 700 miles away. Mine-mouth dispersed unit siting could increase this advantage, since a fossil energy park, even if centrally located in a coal-producing area, would require fuel resources in excess of the coal production from ten of the largest projected mines.

Absolute power production costs markedly reflect inflationary escalation. The table below illustrates the costs for the cases studied.

TABLE ES-6. POWER PRODUCTION COSTS
(Mills per kwhr)

	Nuclear		Fossil	
Year	Park	Dispersed Sites	Park	Dispersed Sites
1985	32	30	45	41
1995	36	40	58	59
2005	52	58	87	89
2015	68	73	126	130

QUALITATIVE FACTORS

For the most part, the non-quantitative factors relate to the institutional issues which include government and private sector organizations; regulation, licensing and anti-trust; community impact and development; and labor relations.

In general, the park concept carries with it the need for change in these institutional areas. Continuing with only conventional dispersed siting under essentially existing institutional arrangements represents an "easier", but not necessarily more desirable or effective, approach to meeting our electric power needs. In that "inertial" sense, our existing institutional structure tends to favor dispersed siting. On the other hand, there is some uncertainty that existing institutional structures and arrangements will be adequate to cope with the problems of meeting our future electric power needs in any case. Changing trends indicate that while the energy park concept highlights and magnifies the requirement for institutional modifications, such modifications, albeit it to a lesser degree, are currently beginning to take place or are being considered at various levels in both the public and private sectors to better meet future electric power needs.

The government organizational factor, in the same sense as indicated above, would appear superficially to favor dispersed sites because of the anticipated difficulty in accomplishing the modifications required to implement the energy park concept. The associated development of regional mechanisms able to carry out the broad planning and implementing functions associated with an energy park and relating to the federal government in politically acceptable ways presents a formidable task with long lead times for accomplishment. While structural changes in the organization of the electric utility industry will present some difficulties, it is believed they could be effected more readily by the industry as the need for and advantages of changes become evident.

In other areas (anti-trust, insurance, etc.), because the considerations appear to be relatively more complicated for an energy park, dispersed siting would be more favorable. However, such an argument should not be construed as precluding resolution of such issues in ways that really represent institutional advances that are in the national interest.

In a similar vein, the problems of land acquisition and water supply would appear more difficult for an energy park than equivalent dispersed sites because of the larger quantities of these resources required at a single location. These specific problems are overlain

by institutional considerations of land use planning and policy, the major role of the states in water allocation and use, and the competitive use of these resources for agriculture and other purposes. These latter considerations are applicable to dispersed sites also, with comparative differences between energy parks and dispersed sites being one of degree rather than of kind.

A major issue that relates solely to large energy park development is the socio-political impact on an area, be it urban or rural. If the presumption of reasonably remote siting of an energy park is correct, the impact of the labor force and the associated "impedimenta" (families, services, etc.) over a long construction schedule could present an unusual opportunity for regional development and population growth centers. Most communities easily adjust to the short-term impact of transient construction forces associated with dispersed siting with little long lasting effect. The larger more permanent influx of people associated with an energy park development project could be expected to impact on community development, social services, political issues and long-term employment opportunities. Site selections for energy parks therefore provide opportunities to establish nuclei for desirable and permanent population and industrial growth centers which could revitalize the development of surrounding regions. The long-term economic and social impact on regional growth provides unique potential national advantages not normally associated with conventionally dispersed energy generation facilities.

TASKS 1 AND 2
GENERAL INFORMATION
FOR ENERGY PARKS

Tasks one and two are combined into one Chapter called Task 1/2, which is outlined in the table of contents beginning on this page. This Chapter provides general information on dispersed sites and energy parks. The Chapter also deals more completely with fossil fueled energy parks. Resource requirements for energy parks are reported. Among these requirements are: capital, land, water, fuel, and labor, environmental protection and heat rejection are discussed.

Task 1/2 - Contents

		Page
1/2.1	Introduction	1/2-1
1/2.2	Summary of Task 1/2	1/2-3
1/2.3	Selection of Representative Turbine Unit Sizes and Total Site Capacities	1/2-7
1/2.3.1	General Considerations	1/2-7
1/2.3.2	Fossil Fueled Systems	1/2-8
1/2.3.2.1	Turbine Configurations	1/2-8
1/2.3.2.2	Fossil Fired Dispersed Sites	1/2-9
1/2.3.2.3	Fossil Fired Energy Park	1/2-10
1/2.3.3	Nuclear Fueled Systems	1/2-12
1/2.3.3.1	Turbine Configuration	1/2-12
1/2.3.3.2	Nuclear Fueled Dispersed Sites	1/2-12
1/2.3.3.3	Nuclear Fueled Energy Parks	1/2-12
1/2.4	Energy Park Arrangements	1/2-13

		Page
1/2.4.1	General Considerations	1/2-13
1/2.4.2	Nuclear Park Arrangements	1/2-18
1/2.4.3	Fossil Park Arrangements	1/2-22
1/2.4.4	Fold-Out Drawings	1/2-24
1/2.5	Input Data for Cost Benefit And Sensitivity Analysis	1/2-25
1/2.5.1	Capital Costs	1/2-26
1/2.5.1.1	Capital Costs - Nuclear Units	1/2-26
1/2.5.1.2	Nuclear Fuel Reprocessing and Refabrication Plant Cost Data	1/2-27
1/2.5.1.3	On-Site Factory Costs for Nuclear Energy Park	1/2-36
1/2.5.1.4	Training Center Costs	1/2-36
1/2.5.1.5	Capital Costs - Fossil Units	1/2-39
1/2.5.1.6	On-Site Factory Costs For Fossil Energy Park	1/2-40
1/2.5.2	Operation and Maintenance Costs	1/2-46
1/2.5.3	Discussion of Capital Costs - Nuclear Units	1/2-48
1/2.5.4	Discussion of Capital Costs - Fossil Units	1/2-57
1/2.5.5	Multiple Unit Relative Cost Factors - Nuclear Units	1/2-58
1/2.5.6	Multiple Unit Relative Cost Factors - Fossil Units	1/2-63
1/2.5.7	Multiple Unit Relative Cost Factors - Operation and Maintenance	1/2-65
1/2.5.8	Regional Effects on Cost of Power Plant Construction	1/2-65
1/2.5.9	Labor Requirements - Nuclear Unit Construction	1/2-70
1/2.5.10	Labor Requirements - Fossil Unit Construction	1/2-73
1/2.5.11	Total Labor Requirements	1/2-73
1/2.6	Modularization For Fossil-Fueled Energy Parks	1/2-74

		Page
1/2.6.1	Boiler Modularization	1/2-75
1/2.6.2	Turbine Room Modularization	1/2-81
1/2.6.2.1	Turbine Generator Modules	1/2-82
1/2.6.2.2	Assessment of Labor Savings In Turbine Building Modularization	1/2-87
1/2.6.3	Balance of Plant Modularization	1/2-88
1/2.6.4	On-Site Fabrication Facility Assumptions	1/2-88
1/2.6.5	Cost Savings From Modularization On Fossil Plants	1/2-89
1/2.7	Environmental Considerations For Fossil Dispersed Sites And Energy Parks	1/2-91
1/2.7.1	Environmental Standards and Constraints	1/2-91
1/2.7.1.1	Introduction	1/2-91
1/2.7.1.2	Analytical Approach	1/2-92
1/2.7.1.3	Assumptions	1/2-98
1/2.7.1.4	Summary Results and Conclusions	1/2-100
1/2.7.2	Flue Gas Desulfurization	1/2-109
1/2.7.2.1	Process Assumptions	1/2-112
1/2.7.2.2	By-Products of SO_2 Removal Systems	1/2-114
1/2.7.2.3	Capital Costs of SO_2 Removal Systems	1/2-115
1/2.7.2.4	Operation and Maintenance Of The Scrubbing System	1/2-116
1/2.7.3	Additional Environmental Protection Costs	1/2-118
1/2.7.4	Appendices	1/2-120
1/2.8	Cooling Mode Considerations	1/2-192
1/2.8.1	Cooling Ponds	1/2-194
1/2.8.2	Once-Through Cooling	1/2-196
1/2.8.3	Evaporative Cooling Towers	1/2-196
1/2.8.4	Dry Cooling Towers	1/2-200
1/2.8.5	Dry Cooling Towers With Peak Shaving	1/2-201
1/2.8.6	Water Consumption	1/2-203

		Page
1/2.9	Fossil Fuel Cycle Considerations For Energy Parks and Dual Unit Dispersed Sites	1/2-205
1/2.9.1	Coal Quantities Required	1/2-205
1/2.9.2	Coal Costs Assumed	1/2-206
1/2.9.3	Transportation Modes	1/2-210
1/2.9.3.1	Transportation By Water	1/2-210
1/2.9.3.2	Transportation By Slurry Pipeline	1/2-211
1/2.9.3.3	Transportation By Rail	1/2-215
1/2.9.4	Cost Considerations - Low BTU Coals	1/2-225
1/2.9.5	Conclusions and Research Topics	1/2-225
1/2.10	Reliability, Availability and Plant Capacity Factor Assumptions	1/2-226
1/2.11	Further Research Needs For Energy Parks	1/2-229
1/2.12	References	1/2-231
1/2.13	Appendix	1/2-237
1/2.14	Acknowledgements For Task 1/2	1/2-244

1/2.1 INTRODUCTION TO TASKS 1 AND 2

Task 1/2 is a combined chapter summarizing the work done on Tasks 1 and 2, as shown on the NSF Energy Park Study Work Flow Chart on the next page. This chart is included to indicate the complex inter-relationships necessary to complete the study. Tasks 1 and 2 are basically concerned with providing current information on power plant input requirements in the areas of capital costs, construction schedules, multiple unit relative cost factors, alternate modes of heat rejection, environmental protection considerations for fossil power parks, and conceptual plant arrangements and facilities. Data for fossil fuel (coal) transportation and mine mouth cost considerations; and for nuclear fuel cycle costs including fuel fabrication and reprocessing facilities, are also included.

Land requirements vary significantly with consideration of the heat rejection system; the sludge and waste disposal system for fossil plants; the areas required for construction, and the need for adequate site security. Representative numbers of acres are provided.

Labor requirements, while not detailed by construction trade, are discussed; and an example of the size of the park community which might develop is included.

Operation and maintenance manpower and cost requirements are provided; and potential savings for multiple unit sites are estimated using relative cost multipliers for these costs on successive units.

The input data provided in this Task is used for performing the cost benefit and sensitivity analysis reported in Task 9. That analysis makes the cost comparision between energy parks and dispersed sites.

Other considerations such as environmental protection, labor community size, and coal transportation logistics are included to enable the reader to assess some of the aspects of the comparison of dispersed sites to energy parks that are not purely monetary.

Modular construction of a fossil power plant is discussed in this task, and some estimates of potential savings in capital and labor are outlined. The facilities at the park necessary to construct and transport these modules are described and their costs are provided. Modularization of nuclear plants is covered in detail in Task 4.

The table of contents for Tasks 1 and 2 lists the section headings for Task 1/2. The following list is an expanded outline of the subjects of Task 1/2:

Section 1/2.1	-	Introduction
Section 1/2.2	-	Executive Summary of Task 1/2
Section 1/2.3	-	Considerations and criteria for selecting unit ratings for application in both dispersed sites and energy parks
Section 1/2.4	-	Conceptual layouts, plot plans and land requirements for energy parks. Discussion of the necessary considerations for park arrangement.
Section 1/2.5	-	Capital costs, maintenance costs, multiple unit relative cost factors, regional effects and labor force size.
Section 1/2.6	-	Modular construction for fossil energy parks
Section 1/2.7	-	Environmental protection standards for fossil energy parks, emissions from multiple stacks, costs for meeting environmental standards.
Section 1/2.8	-	Description of cooling modes, water consumption, costs, etc.
Section 1/2.9	-	Coal for fossil parks - quantities, costs, transportation modes, and low BTU coals
Section 1/2.10	-	Reliability and capacity factor assumptions for this study.
Section 1/2.11	-	Research topics for future studies (briefly outlined)
Section 1/2.12	-	References
Section 1/2.13	-	Appendix on questions answered by the Pennsylvania Energy Park Study team
Section 1/2.14	-	Acknowledgements

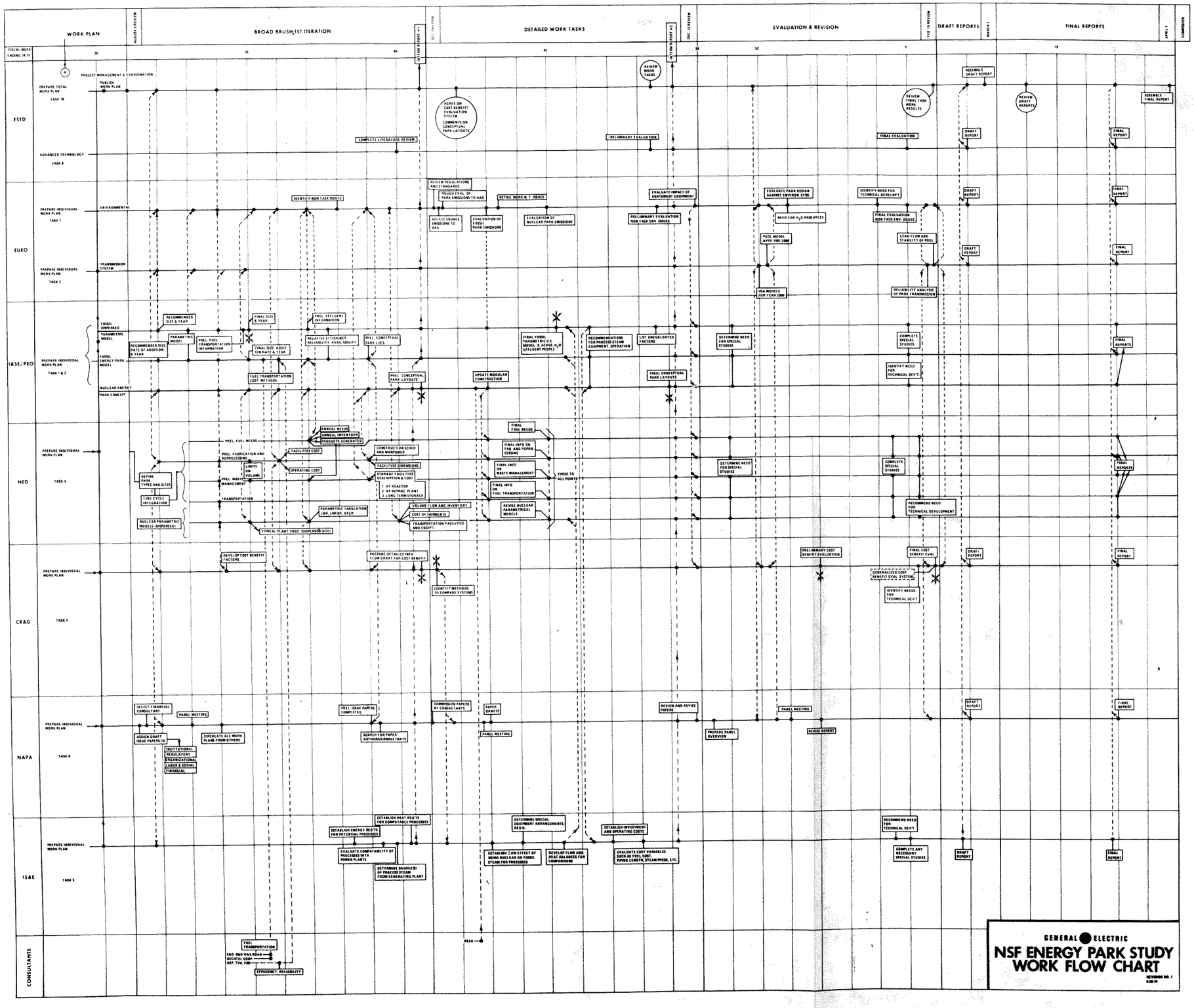
WORK PLAN
BROAD BRUSH, 1ST ITERATION
DETAILED WORK TASKS
EVALUATION & REVISION
DRAFT REPORTS
FINAL REPORTS
AUGUST 1 REVIEW
INTERIM REPORT #1
DEC 1 1976
INTERIM REPORT #2
DEC 1 REVIEW
FEB 15 REVIEW
MARCH 1
APRIL 1
RECOMMENDATIONS
FISCAL WEEK ENDING 74.15
30
35
40
45
50
52
5
10
ESTD
EUEO
I&SE/PEO
NED
CR&D
NAPA
I&SE
CONSULTANTS
PROJECT MANAGEMENT & COORDINATION
PREPARE TOTAL WORK PLAN TASK 10
PUBLISH WORK PLAN
ADVANCED TECHNOLOGY TASK 8
COMPLETE LITERATURE REVIEW
AGREE ON COST-BENEFIT EVALUATION SYSTEM
COMMENTS ON CONCEPTUAL PARK LAYOUTS
REVIEW WORK TASKS
PRELIMINARY EVALUATION
FINAL EVALUATION
REVIEW FINAL TASK WORK RESULTS
ASSEMBLE DRAFT REPORT
REVIEW DRAFT REPORTS
ASSEMBLE FINAL REPORT
DRAFT REPORT
FINAL REPORT
PREPARE INDIVIDUAL WORK PLAN TASK 1
ENVIRONMENTAL
IDENTIFY NON-TASK ISSUES
REVIEW REGULATIONS AND STANDARDS
HOUSE EVAL. OF PARK EMISSIONS TO AAG
DETAIL WORK IN 7 ISSUES
RELATE SOURCE EMISSIONS TO AAG
EVALUATION OF FOSSIL PARK EMISSIONS
EVALUATION OF NUCLEAR PARK EMISSIONS
EVALUATE IMPACT OF ABATEMENT EQUIPMENT
PRELIMINARY EVALUATION NON TASK ENV. ISSUES
EVALUATE PARK DESIGN AGAINST ENVIRON STDS.
NEED FOR H_2O RESOURCES
IDENTIFY NEED FOR TECHNICAL DEVELOPT.
FINAL EVALUATION NON TASK ENV. ISSUES
PREPARE INDIVIDUAL WORK PLAN TASK 3
TRANSMISSION SYSTEM
POOL MODEL AVFR 1981-2000
LEAD FLOW AND STABILITY OF POOL
IGA MODELS FOR YEAR 2000
RELIABILITY ANALYSIS OF PARK TRANSMISSION
PREPARE INDIVIDUAL WORK PLAN TASK 1 & 2
FOSSIL DISPERSED
PARAMETRIC MODEL
FOSSIL ENERGY PARK MODEL
NUCLEAR ENERGY PARK CONCEPT
RECOMMENDED SIZE & YEAR
PARAMETRIC MODEL
PREL. FUEL TRANSPORTATION INFORMATION
RECOMMENDED SIZE RATE OF ADDITION & YEAR
FINAL SIZE & YEAR
FINAL SIZE ADDITION RATE & YEAR
PREL. EFFLUENT INFORMATION
RELATIVE EFFICIENCY RELIABILITY AVAILABILITY
PREL. CONCEPTUAL PARK LAYS
FUEL TRANSPORTATION COST METHODS
PREL. CONCEPTUAL PARK LAYOUTS
UPDATE MODULAR CONSTRUCTION
FINAL FOSSIL PARAMETRIC O.S. MODEL & ACROS H_2O EFFLUENT PEOPLE
RECOMMENDATIONS FOR PROCESS STEAM EQUIPMENT, OPERATION
LIST UNEVALUATED FACTORS
FINAL CONCEPTUAL PARK LAYOUTS
DETERMINE NEED FOR SPECIAL STUDIES
COMPLETE SPECIAL STUDIES
IDENTIFY NEED FOR TECHNICAL DEV'T
FINAL REPORTS
PREPARE INDIVIDUAL WORK PLAN TASK 4
DEFINE PARK TYPES AND SIZES
FUEL CYCLE INTERGATION
NUCLEAR PARAMETRIC MODELS (DISPERSED)
PREL. FUEL NEEDS
PREL. FABRICATION AND REPROCESSING
PREL. WASTE MANAGEMENT
TRANSPORTATION
LIMITS ON VOLUME
ANNUAL NEEDS
ANNUAL INVENTORY
PRODUCTS GENERATED
FACILITIES COST
OPERATING COST
PARAMETRIC TABULATION LWR, LMFBR, HTGR
TYPICAL PLANT DWGS (DISPERSED SITE)
CONSTRUCTION SCHED AND MANPOWER
FACILITIES DIMENSIONS
STORAGE FACILITIES DESCRIPTION & COST
1. AT REACTOR
2. AT REPROC PLANT
3. LONG TERM STORAGE
VOLUME FLOW AND INVENTORY
COST OF SHIPMENTS
TRANSPORTATION FACILITIES AND EQUIP'T
FINAL FUEL NEEDS
FINAL INFO ON FAB AND REPROCESSING
FINAL INFO ON WASTE MANAGEMENT
FINAL INFO ON FUEL TRANSPORTATION
REVISE NUCLEAR PARAMETRICAL MODELS
THESE TO ALL POINTS
DETERMINE NEED FOR SPECIAL STUDIES
COMPLETE SPECIAL STUDIES
RECOMMEND NEED FOR TECHNICAL DEVELOPMENT
PREPARE INDIVIDUAL WORK PLAN TASK 9
DEVELOP COST BENEFIT FACTORS
PREPARE DETAILED INFO FLOW CHART FOR COST BENEFITS
IDENTIFY METHODS TO COMPARE SYSTEMS
PRELIMINARY COST BENEFIT EVALUATION
FINAL COST BENEFIT EVAL.
GENERALIZED COST BENEFIT EVAL SYSTEM
IDENTIFY NEEDS FOR TECHNICAL DEV'T
PREPARE INDIVIDUAL WORK PLAN TASK 6
SELECT FINANCIAL CONSULTANT
PANEL MEETING
ASSIGN DRAFT ISSUE PAPERS TO
INSTITUTIONAL
REGULATORY
ORGANIZATIONAL
LABOR & SOCIAL
FINANCIAL
CIRCULATE ALL WORK PLANS FROM OTHERS
PREL. ISSUE PAPERS COMPLETED
SEARCH FOR PAPER AUTHORS/CONSULTANTS
COMMISSION PAPERS BY CONSULTANTS
PAPER DRAFTS
PANEL MEETING
REVIEW AND REVISE PAPERS
PREPARE PANEL OVERVIEW
PANEL MEETING
REVISE REPORT
DRAFT REPORT
FINAL REPORT
PREPARE INDIVIDUAL WORK PLAN TASK 5
ESTABLISH ENERGY REQ'TS FOR POTENTIAL PROCESSES
ESTABLISH HEAT REQ'TS FOR COMPATABLE PROCESSES
EVALUATE COMPATABILITY OF PROCESSES WITH POWER PLANTS
DETERMINE SOURCE(S) OF PROCESS STEAM FROM GENERATING PLANT
DETERMINE SPECIAL EQUIPMENT ARRANGEMENTS REQ'D.
ESTABLISH CLAIM EFFECT OF USING NUCLEAR OR FOSSIL STEAM FOR PROCESSES
DEVELOP FLOW AND HEAT BALANCES FOR COMPARISONS
ESTABLISH INVESTMENT AND OPERATING COSTS
EVALUATE COST VARIABLES SUCH AS FUEL COST, PIPING LENGTH, STEAM PRESS., ETC.
RECOMMEND NEED FOR TECHNICAL DEV'T
COMPLETE ANY NECESSARY SPECIAL STUDIES
DRAFT REPORT
FINAL REPORT
RECO
FUEL TRANSPORTATION
C&O, B&O RAILROAD
BECHTEL CORP.
AEP, TVA, PJM
EFFICIENCY, RELIABILITY
GENERAL ELECTRIC
NSF ENERGY PARK STUDY
WORK FLOW CHART
REVISION NO. 1
6-30-76

1/2.2 EXECUTIVE SUMMARY OF TASK 1/2

Following is a list of the important contents and conclusions of Task 1/2:

Contents

- Steam Turbine-Generator unit sizes for energy parks and dispersed sizes were selected for further comparative cost studies. For fossil fueled plants the units chosen were 885, 1975, and 1320MW. The nuclear unit chosen was 1300MW.

- Park sizes for the comparison study were chosen to be:

Fossil Park	26,240MW
Nuclear Parks	
Mini	5,200MW
Large	26,000MW

  Units are added to the park at one year intervals.

- Site plot plans and artist's conceptions are provided. A discussion of the general layout of an energy park is given.

- Land requirements for energy parks range from 6000 to 42000 acres depending on the cooling mode and the necessity of sludge (SO_2 removal system and fly ash wastes) storage.

- Heat rejection (cooling modes) systems are considered. The primary method chosen for the cost estimates is the hyperbolic, natural draft, evaporative tower.

- Immediate planning is necessary if the first unit is to start producing electricity in 1985.

- The fossil fueled units are assumed to burn Eastern, 12,000 BTU/lb. coal with high sulfur content. Flue gas desulfurization systems are estimated for both dispersed sites and energy parks.

- Capital costs for the first unit at the dual unit dispersed site and at the energy park are provided. These costs differ due to labor savings assumed on construction costs by modularization of many components in an on-site manufacturing facility.

- Multiple unit relative cost factors are provided to estimate the costs of the succeeding units at dispersed sites and parks.

- Capital costs for the fuel fabrication and reprocessing facilities, the on-site manufacturing facility, and the training center are provided.

- Operation and maintenance costs for the units are included; and estimated savings on this expense in an energy park are provided by multiple unit relative cost factors.

- Costs are estimated for complete environmental protection systems on the fossil fueled units. These systems include:

  Particulate Control
  Flue Gas Desulfurization
  NOx Control
  Noise Control
  Waste Water Treatment
  Coal Dust Control
  Aesthetics

- Modular construction techniques for fossil energy parks are assessed, and the resultant savings are included in the cost estimates for energy parks.

- Modular construction techniques for nuclear energy parks, which are assessed in Task 4, result in estimated cost savings presented and discussed in this Task.

- Labor requirements are considered for constructing the units.

- Regional variations in capital cost and labor productivity are discussed.

Conclusions

- Coal transportation has been investigated with the following major conclusions:

  - Since coal use is going to increase drastically, a careful survey of existing track and right-of-way should be made. Also, an early determination of all potential park and dispersed sites should be made before any track is removed or right-of-way sold.

- Large energy parks requiring 65 million tons of coal per year may be impractical because of transportation logistical limitations. A smaller, more optimum size based on transportation considerations is feasible.

- All modes of coal transportation will be necessary to meet the needs of the electricity utility industry; whether fossil fueled energy parks or dispersed sites are the sites chosen. Barge, Slurry, Rail, and conveyer systems will all be needed to carry the ever increasing coal quantities.

- Large investments in capital for coal transportation equipment are required.

- Legislation benefiting both slurry pipelines and railroads is necessary if they are to participate meaningfully in meeting the future energy demands.

o New coal mines must be opened and investment in mining equipment must be made.

o Standard designs for the units placed in a park are integral to the assumed cost benefits from energy parks.

o Modular construction methods will be applicable to energy parks. They will result in savings which are reported in Task 9.

o Two basic sets of air standards are applicable to fossil parks: ambient air quality standards and national emission standards.

o National emission standards introduce no additional constraints on park design as compared to dispersed power plants.

o Ambient air quality standards for particulates and nitrogen oxides introduce no constraints on fossil park design and operation, assuming emission standards are satisfied.

o Long term ambient air quality standards (annual average concentrations) introduce no significant constraints on energy park design or operation.

- Short term sulfur dioxide ambient air quality standards have the potential to introduce significant constraints on fossil park design and operation, even when emission standards are satisfied.

- For all energy park configurations considered, maximum ground level concentrations of SO_2 exceeded ambient air quality standards less than 8% of the time, suggesting the possible use of intermittent controls.

- SO_2 emissions must be reduced 60 to 80% below emission standards, depending on park configuration; for a 26,000MW coal park to satisfy all ambient air quality standards <u>all</u> of the time.
  Note: An example of 80% reduction is a 13000 BTU/lb., 2.5% sulfur coal and 95% scrubber efficiency.

- SO_2 emissions must be reduced 40 to 75% below emission standards, depending on park configuration, for a 26,000MW coal park to exceed all ambient air quality standards less than 5 days a year.

- With SO_2 emissions 2.5 times emission standards a two unit, 2600MW site would exceed all ambient air quality standards less than 5 days a year.

1/2.3 SELECTION OF REPRESENTATIVE TURBINE UNIT SIZES AND TOTAL SITE CAPACITIES

1/2.3.1 General Considerations

To properly evaluate the advantages and disadvantages of the energy park concept, representative steam turbine configurations had to be established. This task required determination of turbine sizes; MW ratings; dates that a given turbine will be available and acceptable for use; and the total number of units to be located at a given site.

The numbers selected for each of the above categories were based, in part, on the following assumptions;

A. Park units should be selected to utilize the largest proven components. This would minimize the capital expenditure in dollars per kilowatt.

B. Turbine design should maximize steam flow through the last stage buckets, as future environmental restrictions will probably result in higher turbine exhaust pressures. The larger last stage flow helps to optimize turbine performance at exhaust pressures in the 2 1/2 in. HgA to 5 in. HgA range.

C. A turbine of a given size and rating must have been in operation for at least five years before it will be considered as suitable for use in energy parks. This requirement is intended to satisfy utility industry standards for availability and reliability; while maximizing the use of the large turbines. A more detailed discussion of reliability and availability may be found in Section 1/2.10.

D. Dispersed sites may occasionally utilize larger, "pioneer" units; because dispersed sites have somewhat less at stake in capital investments, site development and forced outage penalties. It is assumed that the employment of large turbines at some dispersed sites will satisfy the five year experience base required for energy park applications.

1/2.3.2 Fossil Fueled Systems

1/2.3.2.1 TURBINE CONFIGURATIONS. Table 1/2.3-1 lists three currently available, large steam turbines; which satisfy the requirements listed in the preceding section. It should be noted that although the specifications listed are for General Electric Company turbines, comparable equipment may be available from other domestic manufacturers.

TABLE 1/2.3-1

Turbine Design	Maximum Rating MW (e)	Station Heat Rates @ In. HgA Back Pressure 1.5	2.5	3.5
4 flow, 33 1/2" LSB, 3600 RPM	885	8946	8984	9093
6 flow, 30" LSB, 3600 RPM	1075	8941	8993	9088
6 flow, 33 1/2" LSB, 3600 RPM	1320	8983	9019	9122

Note: (1) Station heat rates are unit heat rates adjusted for boiler efficiency and other losses.

(2) Back pressures correspond to once through cooling; cooling ponds; and natural draft cooling towers, respectively.

(3) LSB - Last stage bucket

The tabulated maximum ratings are based on inlet steam properties of 3500 PSIA and 1000F, with one reheat to 1000F. Although the utility industry has experienced some reliability problems when using an initial pressure of 3500 PSIA, it is expected that these problems will be acceptably resolved before initial energy park construction. Therefore, due to its many inherent advantages, the 3500 PSIA inlet pressure was selected; rather than a lower pressure such as 2400 PSIA. Some of the primary advantages of this inlet pressure are described below:

A. An approximate 1 1/2% decrease in the net heat rate, which is particularily significant in light of present and projected fuel availabilities.

B. Smaller overall turbine dimensions resulting from the lower steam volume required for a given MW rating.

C. Higher available turbine power ratings.

D. Better potential for future improvements.

Inasmuch as the 4 flow, 33 1/2" LSB (885MWe max.), the 6 flow 30" LSB (1075MWe max.) and the 6 flow 33 1/2" LSB (1320MWe max.) are among the largest units available, and considering the historically slow unit size growth rate; these three configurations will be used to develop all fossil dispersed sites and energy parks in the time period covered by the report. Further, although all three designs are currently available, only the 4 flow, 33 1/2" LSB configuration is expected to have an acceptable proven reliability during the early stages of energy park construction. Therefore, this design will be used exclusively in initial dispersed sites and as the leading units employed in energy parks. Later dispersed site and energy park units will be 6 flow, 30" LSB turbines, followed by the 6 flow 33" LSB design; as the experience base of each increases to an acceptable level. The selection of these unit sizes is not meant to imply that larger units won't be available for the three time increments from 1985 to 2008; but rather that the units specified will be the largest available units with proven reliability.

1/2.3.2.2 FOSSIL FIRED DISPERSED SITES. Figure 1/2.3-1 is a representative plot of fossil fired unit-ratings vs. year in service. The uppermost curve indicates the maximum unit ratings that are predicted to be available for purchase in the years 1985 through 2008. The assumed dispersed site unit rating, vs. year in service, is shown in Figure 1/2.3-1 as a smooth curve. However, it does not predict that in 1990, for example, the unit size will be exactly 1046MW; but rather that the unit size capacities of selected units will generally follow the growth curve and approach the largest available unit sizes as they become acceptably reliable.

Based on this curve, unit sizes and dates of service for costing dispersed sites have been designated as follows:

885MW 4F 33 1/2" 3500 PSIA - 1000°F/1000°F at 0% MU and 3 1/2" HgA back pressure units for 1985-1992

1075MW 6F 30" 3500 PSIA - 1000°F/1000°F at 0% MU and 3 1/2" HgA back pressure units for 1993 - 2000

1320MW 6F 33 1/2" 3500 PSIA - 1000°F/1000°F at 0% MU and 3 1/2" HgA back pressure units for 2001 - 2008

The two unit sites will have their units coming on line one year apart, which is typical of current practice. Although it is recognized that currently there are sites where more than two units are located; for this comparison study two unit dispersed sites have been arbitrarily chosen.

1/2.3.2.3 FOSSIL FUELED ENERGY PARKS. The energy park proposed for this study will contain the following units:

Eight-4 flow, 33 1/2" LSB @ 885MW (e)	=	7080MW Total
Eight-6 flow, 30" LSB @ 1075MW (e)	=	8600MW Total
Eight-6 flow, 33 1/2" LSB @ 1320MW (e)	=	10560MW Total
TOTAL ENERGY PARK		26240MW Total

The unit sizes for the park were chosen to take advantage of the latest technological advances, by pushing ahead to larger units as their reliability is established (the chronological distribution of the three units is shown graphically in Figure 1/2.3-1). However, the ultimate 26,240MW size chosen for the energy park is not to be construed as a statement which in anyway advocates this size as the optimum size. Many parks will be smaller or larger than this, as dictated by the load demand and specific site chosen.

Although Figure 1/2.3-1 indicates a twelve month construction to start-up cycle, initial cycles may exceed twelve months until the necessary construction experience is acquired. However, additional labor may be assigned if it is deemed desirable to maintain this interval. Conversely, as the load demand accelerates and construction experience accrues; the construction to start-up interval may be shortened.

The park was designed to contain eight units of each size; as this number of units is thought to be economical from the standpoint of parts interchangeability; common manufacturing and maintenance facilities; reduced labor forces required for construction, operation and maintenance; easier operator training, and the many other advantages which are apparent assets of the energy park concept. The park also has some advantage from the anti-trust standpoint in that new bids can be requested when the unit size is increased.

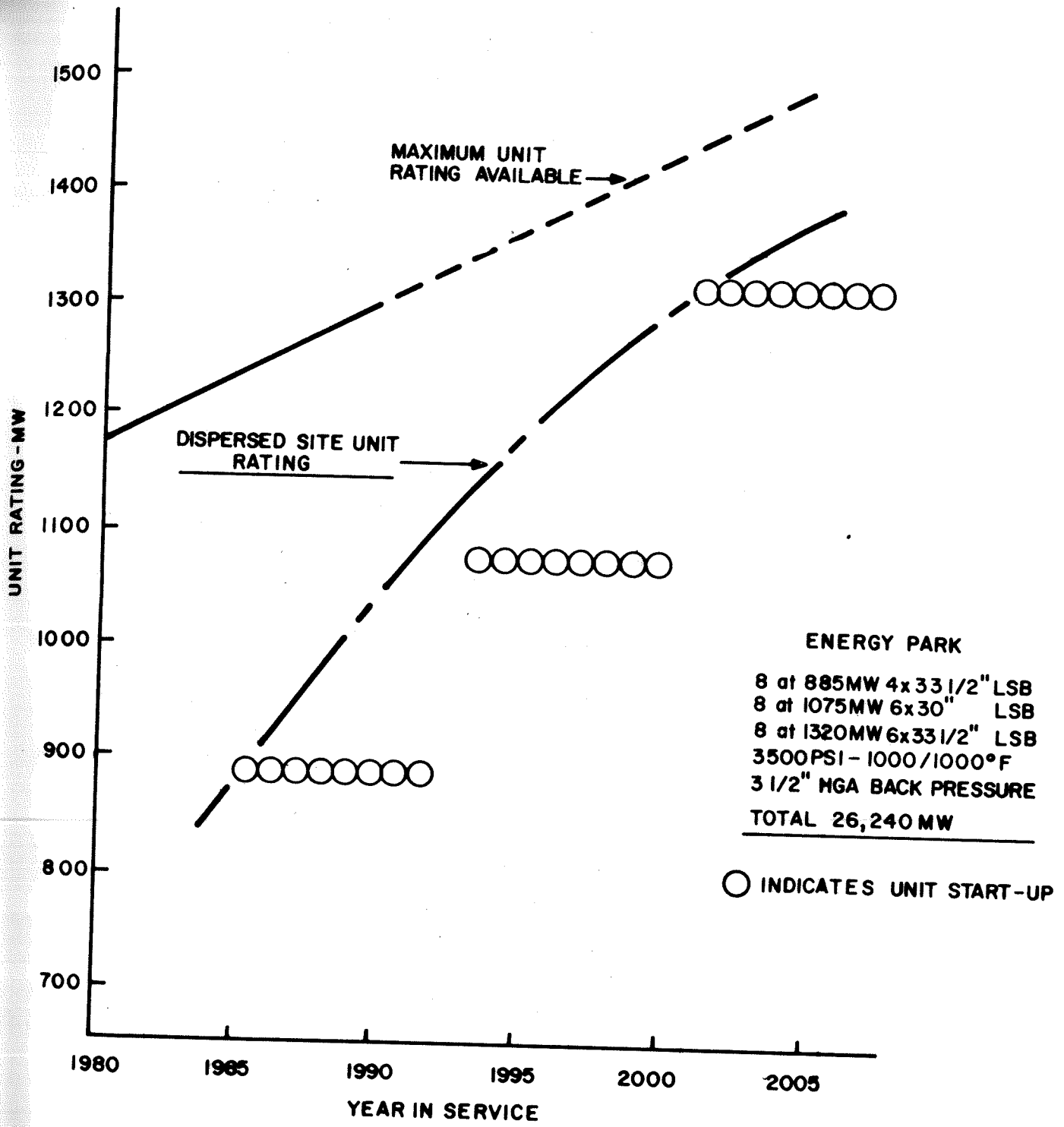

FIG. 1/2.3-1
FOSSIL FUEL UNIT RATINGS FOR
N.S.F. ENERGY PARK STUDY

1/2.3.3 Nuclear Fueled Systems

1/2.3.3.1 TURBINE CONFIGURATION. The 1300MW nuclear steam turbine unit rating has been selected for the entire time period under study. The turbine selected is a 6 flow, 43" LSB 1800 RPM unit, or equivalent machine; with an inlet steam pressure of approximately 975 PSIA. It is expected that the components will have achieved the five year experience base described earlier by the time the first nuclear park units move into the design stage; as units rated above 1000MW have been in service since late spring 1974.

Further unit size growth rate is currently limited by a thermal discharge ceiling established by the AEC at 3800MWth, which is approximately 1300MWe. This ceiling may be lifted when sufficient operating experience is obtained; but the new large components may require up to 15 years before satisfactory reliability can be established for energy park application. The 15 year period includes 10 years for licensing, design and construction and 5 years operation to establish maturity.

1/2.3.3.2 NUCLEAR FUELED DISPERSED SITES. The estimates for nuclear fueled dispersed sites were based on each site having two 1300MW turbines; with natural draft cooling towers as the primary cooling mode.

1/2.3.3.3 NUCLEAR FUELED ENERGY PARKS. Four types of nuclear power parks were examined in this study: A large conventionally fueled park; a plutonium burning (PUB) park; a park containing a mix of light water reactors and liquid metal fast breeder reactors; and a small, conventionally fueled (mini) park.

The large, conventionally fueled park incorporates twenty 1300MWe steam turbine-reactor sets (26,000MWe total); and was evaluated with and without on-site fuel reprocessing and fabrication. Further information and possible arrangements of this park may be found in Section 1/2.4 and in Chapter 4.

The plutonium burning (PUB) park contains twenty 1300MWe steam turbine-reactor sets (26,000MWe Total). The PUB park will have on-site fuel reprocessing and fabrication facilities designed to satisfy PUB park needs, as well as the needs of three conventionally fueled, large (i.e. 26000MWe) parks. This arrangement would minimize off-site transportation of plutonium and reduce problems associated with radioactive waste.

A discussion concerning the mixed park (i.e. having a mix of LWR's and LMFBR's) may be found in Task 4; however, an economic analysis was not attempted.

The mini-park is comprised of four 1300MWe turbines (4200MWe total) and incorporates on-site fuel reprocessing and fabrication. An analysis of the mini-park was performed to evaluate on-site fuel handling in parks containing as few as four units.

Figure 1/2.3-2 summarizes the various dispersed site and energy park configurations covered by this study. As noted earlier, these are representative arrangements and are subject to change as dictated by specific applications.

A more detailed discussion of all nuclear fueled power parks may be found in Task 4.

1/2.4 ENERGY PARK ARRANGEMENTS

1/2.4.1 General Considerations

In order to better evaluate the viability of the energy park concept; several possible site arrangements were generated during this study. The following eight arrangements were incorporated into this report and may be found in Section 1/2.4.4:

Nuclear fuel dispersed site plot plan	X03-74F-M101
Fossil fuel dispersed site plot plan	M102
Nuclear fuel power park partial plot plan	M103
Nuclear fuel power park site plot plan	M104
Fossil fuel power park partial plot plan	M105
Fossil fuel power park plot plan	M106
Nuclear power park modular arrangement with cooling towers	M107
Fossil fuel power park site plot plan with natural draft cooling towers	M108

These drawings form the basis for the following discussion; however, as concepts evolved continually throughout the course of this study, some drawings may be inconsistant with the accompanying text. Therefore, to avoid confusion, reference will be made to specific drawings which reflect the arrangement being discussed. A brief discussion concerning all of the individual drawings may be found in Sections 1/2.4.2 (nuclear), and 1/2.4.3 (fossil).

FIGURE 1/2.3-2

Dispersed Site and Energy Park Sizes For NSF Energy Park Study

Dispersed Site

Fossil

2- 885MW 4F X 33½" LSB units or

2- 1075MW 6F X 30" LSB units or

2- 1320MW 6F X 33½" LSB units

Nuclear

2 - 1300MW 6 X 43" units

Energy Parks

Fossil

8- 885MW units

8- 1075MW units

8- 1320MW units

Total 26,240MWe

Nuclear

1. Mini Parks - 4-1300MW units total 5200MWe
2. Large Parks - 20-1300MW units total 26,000MWe with and without fuel fabrication and reprocessing
3. Plutonium Burning Parks (PUB park) - 20-1300MW units total 26,000MWe and fuel recovery and fabrication for four large parks
4. Mixed Parks - LWR's and LMFBR's

In addition to the above site layouts, the four artist's renderings listed below are also contained in this report:

Nuclear Energy Park with Pond
Nuclear Energy Park with Towers
Fossil Energy Park with Pond
Fossil Energy Park with Towers

It should be noted that the four renderings are included solely to give the reader a better visual picture of park arrangements; i.e. the renderings are not intended for detailed technical analysis. For example, the renderings of the nuclear park arrangements do not show the reactor buildings arranged for modular construction, as shown in drawing M107.

The reader should note that both BWR's and PWR's are shown in the park. Also the visual impact of so many transmission lines terminating at one location might be reduced by undergrounding near the park.

The basic park layout selected for this study is shown in drawing M107. The "Horseshoe" arrangement was chosen because this grouping: (1) Provides access to new construction areas and operating units simultaneously; (2) Minimizes distance between common park facilities and unit sites; (3) permits utilization of efficient on-site manufacturing and construction techniques; and (4) Affords ample rail, road, and canal access to park interior while maintaining adequate security. However, this is but one possible arrangement; the ultimate arrangement will require extensive further study, as well as consideration of the individual site.

The on-site manufacturing facility, as shown in drawing M107, would be used for fabrication of major subassemblies or materials; which would then be transported to the construction sites. As logistics are an important consideration, the on-site manufacturing area should be located as close as possible to the construction sites; while still maintaining (barge, rail, and/or road) accessibility to storage areas and the park exterior. One solution to this problem would be to utilize semi-permanent construction of the on-site manufacturing facilities, thus permitting the on-site manufacturing area to be relocated after completion of a predetermined number of units. For example, the on-site manufacturing area could be located to support the construction of several units located on a park side (as shown in drawing M107); then

moved to an adjacent side upon their completion. However, the utilization of on-site manufacturing facilities and other special construction techniques requires that there be ample space at construction sites for lay down of subassemblies, piping modules etc., so that there will be no interference with operating units.

A warehousing and storage area, to support new construction and maintenance of operating units, is shown in drawing M107 adjacent to the park access corridor. An overhead crane, designed to lift the largest modules shipped to the site for park construction, will be used to raise equipment and materials off the barge canal, which is shown terminating in the storage area. The equipment and materials would then be transported to the warehouse, storage area, on-site manufacturing area or construction site; via large, tracked transporters or railroad cars. An alternate arrangement would make use of a more extensive canal system, allowing large items to be taken directly to the on-site manufacturing area and/or construction sites by barge.

Equipment and subassemblies would be put into place using a second, larger (1000 ton) overhead crane, located as shown in drawing M107. The crane would be designed to lift the largest unit modules, and would be sized to operate over the unit under construction. The overhead crane would not, however, be allowed to operate over a unit that is in service; but rather would be relocated as necessary.

Due to the large number of items required for the construction and maintenance of the many units is an energy park, a computerized storage and retrieval system would probably be utilized in the warehousing facility. For further discussion of possible energy park construction techniques, see Sections 4.11 and 1/2.6.

Natural draft (hyperbolic) cooling towers with supplemental cooling ponds were chosen as the primary cooling mode for this study, because this system offers flexibility of operation; low operating costs; is environmentally acceptable; and requires less acreage than cooling ponds.

The main alternate cooling system considered in this report, cooling ponds, is shown in drawings M103, M104, M105 and M106. Cooling ponds require extremely large land areas, but womewhat less make-up than cooling towers with supplemental cooling ponds. Cooling ponds are also site dependent as site topography determines pond depth, shape, surface area and number of ponds required.

Dikes are used with cooling ponds to maximize the time allowed for cooling, before reintroducing discharge (warm) water back into the circulating water system. In this scheme, the warm water is discharged on the far side of the dike (see drawings M104 and M106), and is forced to circulate around dike before reentering the intake structures. The number and location of dikes, if required, would be determined by site physical and atmospheric characteristics. A more complete discussion of cooling modes may be found in Section 1/2.8.

The electrical distribution system, shown in site arrangement drawings M107 and M108, is based on 5200MW per switchyard. All switchyards are electrically connected and each is shown with two 765KV transmission lines. A 200 foot wide right-of-way was specified for each transmission line. Electrical considerations are discussed in further detail in Task 3.

The park administrative complex is located adjacent to the main access corridor; either inside the main park perimeter as shown in figure M107; or outside the main perimeter as shown in figure M105. The location and size of administration complexes in individual parks will be determined by site functional and security requirements.

In addition to fulfilling park administrative requirements, the administrative facility may also serve as a public relations center (complete with appropriate displays), and as a visitor reception center, performing the initial screening and routing of park visitors.

The park training center could also be located in the administrative complex, as this would facilitate the use of the training center for training personnel from dispersed sites; as well as park employees. As the training center includes classrooms, control room simulators and laboratories to train technicians in radio-chemistry, welding, etc; the center would be able to offer a more complete training program than is typically available to dispersed site employees. The dollars collected for this service would also help offset the initial capital investment.

One or more employee service buildings could be located convenient to operating units and construction

areas. The service centers would typically contain maintenance shops; radiation safety, water sampling and other laboratories; hospital/clinical services; employee benefit offices such as the insurance department and credit union; cafeterias; lounges; showers, locker rooms and change areas; as well as employee recreational facilities.

To improve employee access to employee service centers and other park areas; an on-site employee transportation system could be developed. This system could utilize shuttle buses and/or railed vehicles; and would simplify park security and logistics, especially if employee vehicles are all parked in a parking area external to the main security perimeter.

Colocated industries are shown located on the park boundaries as users of park-produced steam and/or electricity. To maximize the benefits from this arrangement, industrial complexes should be located to minimize steam piping costs and losses; and to reduce electrical transmission distances. Industrial complexes should also be located reasonably close to transportation facilities, such as major highways, to simplify employee commutation and distribution of produced goods. For additional discussion of colocated industries, the reader is referred to Task 5.

1/2.4.2 Nuclear Park Arrangements

Space has been allocated in each nuclear park arrangement for a fuel reprocessing and fabrication area. This facility would improve park fuel and waste materials management, and would minimize off-site transportation of radioactive substances. A detailed discussion concerning on-site fuel reprocessing facilities may be found in Task 4.

Nuclear parks generate tremendous amounts of power, have large quantities of radioactive materials, and cover vast land areas. The parks also have a prolonged construction cycle which requires a large and varied work force. These conditions create a security problem in and around the park which requires a security system which is both large and efficient. To assist in maintaining perimeter security; the park could be encircled by cooling water, as shown in drawing M107. This "moat" would require all traffic to enter and leave the park interior via the main access corridor; which could be secured using fences,

armed guards and/or other methods. Security badges, or other means, could be used to identify park employees; while park visitors could be confined to the administrative complex or assigned an escort. Cooling water dikes, when utilized, could be used to form an outer security perimeter and also serve to exclude boaters from the energy park plant area if the cooling pond is used for recreational purposes.

Once inside the park, employees will have to be further identified by function and location. Construction forces will have to be excluded from operational areas; Operations personnel will have to be excluded from construction areas; and all but essential personnel will have to be excluded from entering the fuel reprocessing and fabrication facility. Segregation by general area could be accomplished by such methods as color coded badges or electronic identification; however, redundant security systems having the highest available reliability would be required at the fuel processing area.

Table 1/2.4-1 summarizes land requirements for each of the arrangements that are discussed below (land quantities for each site may also be scaled directly from the drawings). These representative land quantities may be increased dependent on specific site characteristics and/or on the area deemed necessary for separating units to prevent a common disaster from affecting several units.

Drawing M101 depicts a dispersed site having two 1300MW nuclear units. As this drawing is included for purposes of comparision, some minor equipment systems are not shown. In compliance with standard practice, some facilities, such as the radwaste building and control room, are shared; and three transmission lines are indicated in the distribution system.

Drawing M107 presents one possible arrangement for a nuclear park having twenty 1300MW units. (The reactors shown are representative and are not intended to delineate any specific type or system). Each switchyard is sized and located to service four of the twenty units; and occupies approximately 23 acres. The distribution system consists of two 765KV transmission lines per switchyard, with the transmission line directions shown arbitrarily.

The reactor/turbine building are shown in-line to facilitate the use of modular construction techniques.

TABLE 1/2.4-1

LAND REQUIREMENTS*

ACRES

CATEGORY	FOSSIL DISPERSED 2 UNITS	FOSSIL 24 UNIT PARK	NUCLEAR DISPERSED 2 UNITS	NUCLEAR MINI PARK 4 UNITS	NUCLEAR 20 UNIT PARK
MW Rating/Site	2150	26240	2600	5200	26000
Plant	500	1600	500	700	1600
Towers & Make-up Pond	180	2150	400	800	4000
Sludge/Ash Disposal	1120	13400	---	---	---
Construction Area	---	300	---	---	300
Total With Towers	1800	17450	900	1500	6000
Increment For Full Cooling Pond	1990	23850	3500	7000	35000
Total With Pond	3790	41300	4400	8500	41000

Land required for transmission right of way has not been included in this table. This subject is discussed in Task 3.

*These land requirements are thought to be representative quantities. The actual amount depends on the specific site and the land required for sludge deposits.

The on-site manufacturing area and the overhead crane, used for final positioning of the construction modules; are shown situated to support construction of the end row of units. As noted earlier, the on-site manufacturing area and overhead construction crane may be relocated as necessary during the construction cycle and space is shown provided on the two side rows of units to indicate two other potential locations.

Natural draft (hyperbolic) cooling towers, with a supplemental pond; are shown as the cooling mode in this drawing. It should be noted that although the cooling pond has been extended to the park access corridor, the overall pond configuration would be determined by site topography. In addition, further study is needed to determine the final arrangement and location of the cooling towers to minimize park exposure to drift, fogging etc; and to prevent undesirable atmospheric disturbances.

The final configuration and location of the fuel reprocessing area; the storage and marshalling area; the manufacturing area; and the employee service buildings will probably require adjustment with further study and consideration of individual sites. For example, the employee service buildings may require relocation to be convenient to the greatest number of employees; and the parking lot shown in the fuel reprocessing area may be reduced or expanded in proportion with the number of park owned vehicles. No attempt was made to indicate all required roads, railways, parking lots or other park support systems, as these systems are site dependent and will vary with such considerations as on-site employee transportation systems and construction techniques.

The areas assigned to colocated industries are considered to be suitable for a good mix of appropriate industries, but the assigned areas may be relocated in whole or in part to other locations on the park perimeter.

Drawings M104 and M103 depicts a nuclear park arrangement with cooling pond (drawing M103 shows an enlarged portion of drawing M104). Approximately 39,000 acres has been allotted for the cooling pond, which may be distributed into smaller ponds as dictated by the individual site. An earthen dike has been provided to prevent discharged (warm) cooling water from reentering the intake structure, and to increase the water cooling period. Further, cooling water discharge lines have been staggered and lengthened to increase the effective area of the pond cooling surface. Of

course, additional detailed analysis will be required to optimize use of such a large cooling pond system. The possibilities for recreation, aquatic farming, etc. using this type cooling mode, are obviously an important consideration.

The reactor building arrangement, as shown in drawings M103 and M104, is not structured to optimize the benefits achieved with modular construction techniques. The alternate configuration shown in drawing M104 could, however, easily be arranged to match the grouping shown in drawings M107.

Although many of the comments made relative to drawing M107 are applicable to drawings M103 and M104; there are two notable exceptions. Firstly, the size of cooling pond becomes an important consideration in the placement of the colocated industries, as steam and electrical transmission distances may become unacceptably long; and secondly, the switchyard and electrical distribution system shown between the groups of reactors is not the same as the arrangement as depicted in drawing M107.

1/2.4.3 Fossil Power Parks

The fossil power parks (shown in drawings M105, M106, and M108) are designed to utilize coal delivered in unit trains. The trains will have side dump and/or bottom dump coal cars which will unload into hoppers located around the periphery of the coal storage area. Tandem car rollover dumping is also possible. The coal is then transported by conveyor through various processing stations, to the live pile stand pipes. After further processing, the coal is conveyed to inplant handling systems; or is distributed over the storage piles using mobile equipment. Alternate methods, such as barge or slurry transportation, are discussed in detail in Section 1/2.9.

Each fossil park arrangement has a 600-700 acre coal storage area, which is sufficient for a ninety day reserve. The storage area is divided into several sub-piles to facilitate pile management and provide access to "Hot Spots." The sub-piles would be developed in compacted layers several feet thick, to an ultimate pile height of between 15' and 50'. Treatment of the storage piles to reduce air pollution resulting from coal dust is discussed in Section 1/2.7.3.

The waste and sludge area for energy parks was sized to accomodate unit effusions for the entire 40-year life of the park. However, it was assumed that the present level of waste accumulation from coal fired plants would be reduced by approximately one-third. This assumption is based on expected improved scrubber technology, recycling of scrubbing materials and utilization of some waste products for various purposes. For example, it has been determined that fly ash is an excellent fertilizer, filtering agent and building material. The waste and storage area will require provision, such as clay or plastic lining around its perimeter, to prevent sulphurous materials from leaching into adjacent areas.

Although fossil park security is of less concern than nuclear park security, an adequate security system will have to be developed. The fossil park security system will have to satisfy the same general requirements described in the preceding Section (1/2.4.2) for nuclear parks; but somewhat less rigorously, and with fewer external requirements.

Table 1/2.4-1 summarizes land requirements for each of the arrangements that are discussed below (land quantities for each site may also be scaled directly from the drawings).

Drawing M102 depicts a dispersed site including two fossil-fired units, and appropriately sized cooling pond. The waste and sludge area is adequate for a twenty year operating life, based on today's technology.

Drawing M108 depicts a power park having twenty-four fossil fueled units, yielding a total park capacity of 26,240MWe. The units are arranged so that each switchyard manages approximately 5200MWe; therefore, a single switchyard will service six, five, or four units, depending on its position in the construction sequence. Electric distribution is via two 765KV transmission lines per switchyard, and a tie to the neighboring switchyards.

The unit configuration shown in drawing M108 is not arranged to optimize modular construction techniques, however, the concepts presented in drawing M107 (nuclear power park) are equally applicable to fossil fueled parks. The waste and sludge area size (approximately 13,000 acres), is based on a 40-year park life; assuming a 33% reduction in waste

generation as discussed earlier. A general discussion concerning the park cooling mode and colocated industries may be found in Section 1/2.4.2.

Drawings M106 and M105 depict a fossil fuel power park with cooling pond. The cooling pond covers a total of 26,000 acres, which would be distributed as dictated by the individual site. The placement of the cooling pond dike and cooling water discharge lines is arbitrary. The units as shown are not arranged to facilitate modular construction and are not grouped to yield 5200MWe per switchyard, as described earlier. In addition, the area allotted for waste and sludge storage is based on current technology, requiring 20,000 acres for the 40-year life of the park. For general comments on the cooling pond and other functional areas, the reader is referred to Sections 1/2.4.1 and 1/2.4.2.

1/2.4.4 Arrangement Drawings

This section contains eight conceptual site arrangement drawings; generated during, and incorporated into this study. The titles and reference numbers of the included drawings are as follows:

Title	Reference Number
Nuclear Fuel Dispersed Site Plot Plan	X03-74F-M101
Nuclear Power Park Modular Arrangement With Cooling Towers	-M107
Nuclear Fuel Power Park Site Plot Plan	-M104
Nuclear Fuel Power Park Partial Plot Plan	-M103
Fossil Fuel Dispersed Site Plot Plan	-M102
Fossil Fuel Power Park Site Plot Plan With Natural Draft Cooling Towers	-M108
Fossil Fuel Power Park Plot Plan	-M106
Fossil Fuel Power Park Partial Plot Plan	-M105

X03-74F-M101

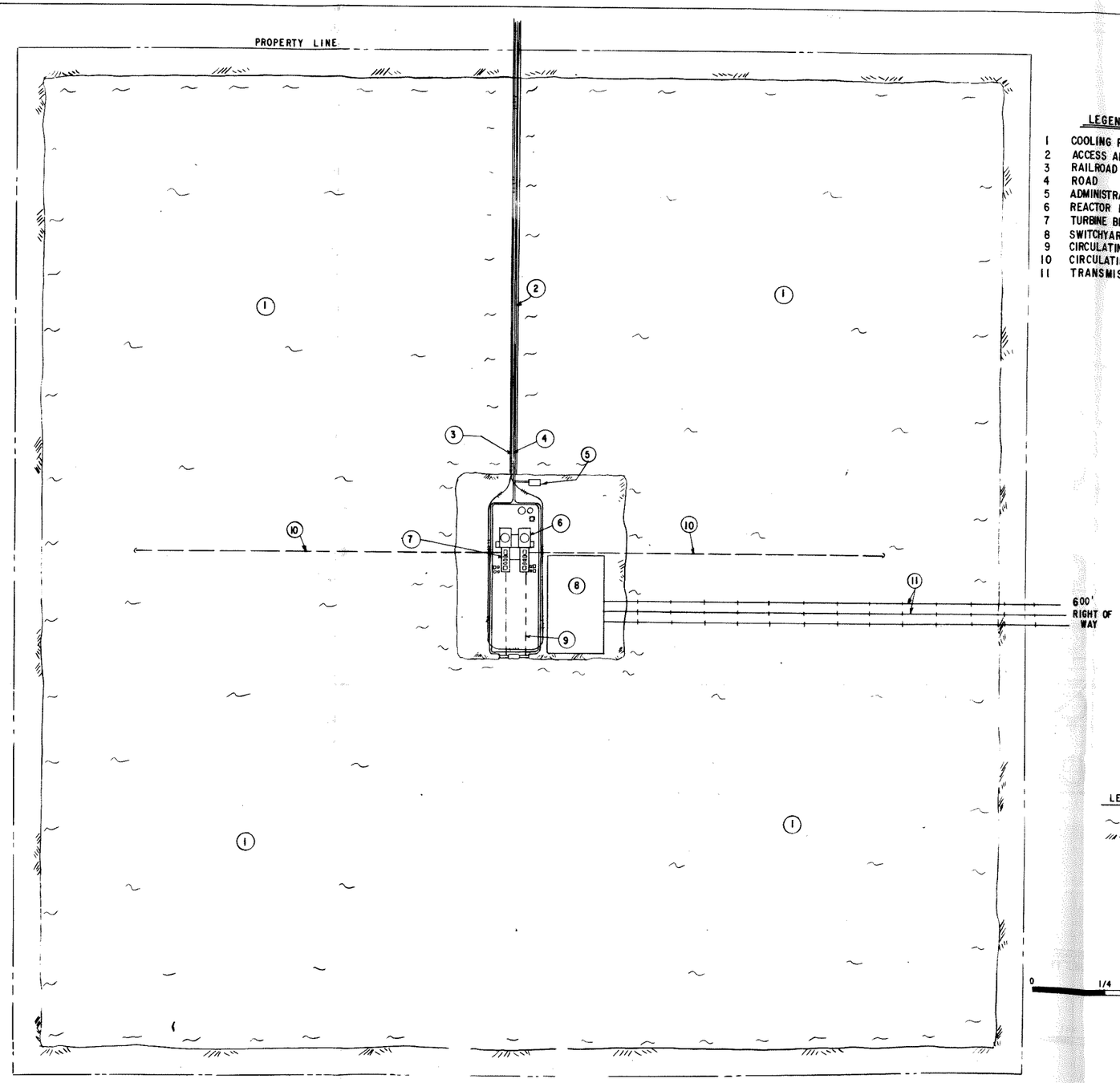

LEGEND

1 COOLING POND AREA
2 ACCESS AREA
3 RAILROAD
4 ROAD
5 ADMINISTRATION BLDG
6 REACTOR BLDG
7 TURBINE BLDG
8 SWITCHYARD
9 CIRCULATING WATER INTAKE
10 CIRCULATING WATER DISCHARGE
11 TRANSMISSION LINES

LEGEND

WATER
LAND

0 1/4 1/2 3/4 1
MILE

F05

TITLE NUCLEAR FUEL DISPERSED SITE PLOT PLAN	GENERAL ELECTRIC — PROJECTS ENGINEERING OPERATION — INSTALLATION AND SERVICE ENGINEERING DEPT SCHENECTADY, N.Y. U.S.A.
MADE FOR NSF ENERGY PARK STUDY	
REQ	FILE NO X03-76 · DRAWN BY · SCALE 1" = 600' · DRAWING NO X03-74F-M101 · REV 0

REVISION NO. BY DATE

X03-74F-M101

XO3-74F-M107

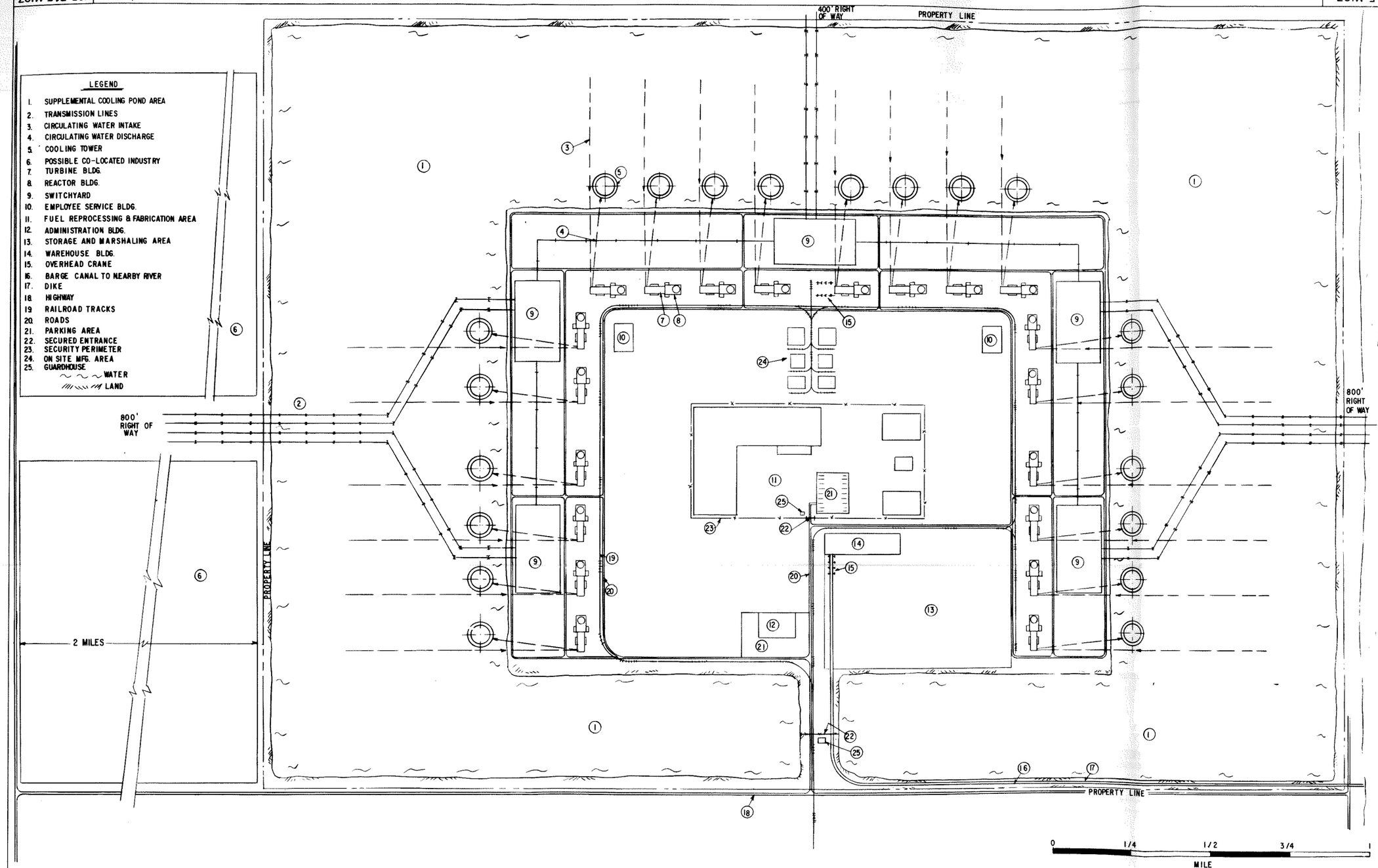

F06

TITLE: NUCLEAR POWER PARK MODULAR ARRANGEMENT WITH COOLING TOWERS	GENERAL ELECTRIC — PROJECTS ENGINEERING OPERATION, INSTALLATION AND SERVICE ENGINEERING DEPT, SCHENECTADY, N.Y. U.S.A.
MADE FOR: NSF ENERGY PARK STUDY	
REQ	FILE NO: XO3-74 · DRAWN BY: Renee Lapczynski · SCALE: 1" = 600' · DRAWING NO: XO3-74 F-M107 · REV: 0

REVISION

NO.	DATE	BY
0	1/1/75	

XO3-74F-M107

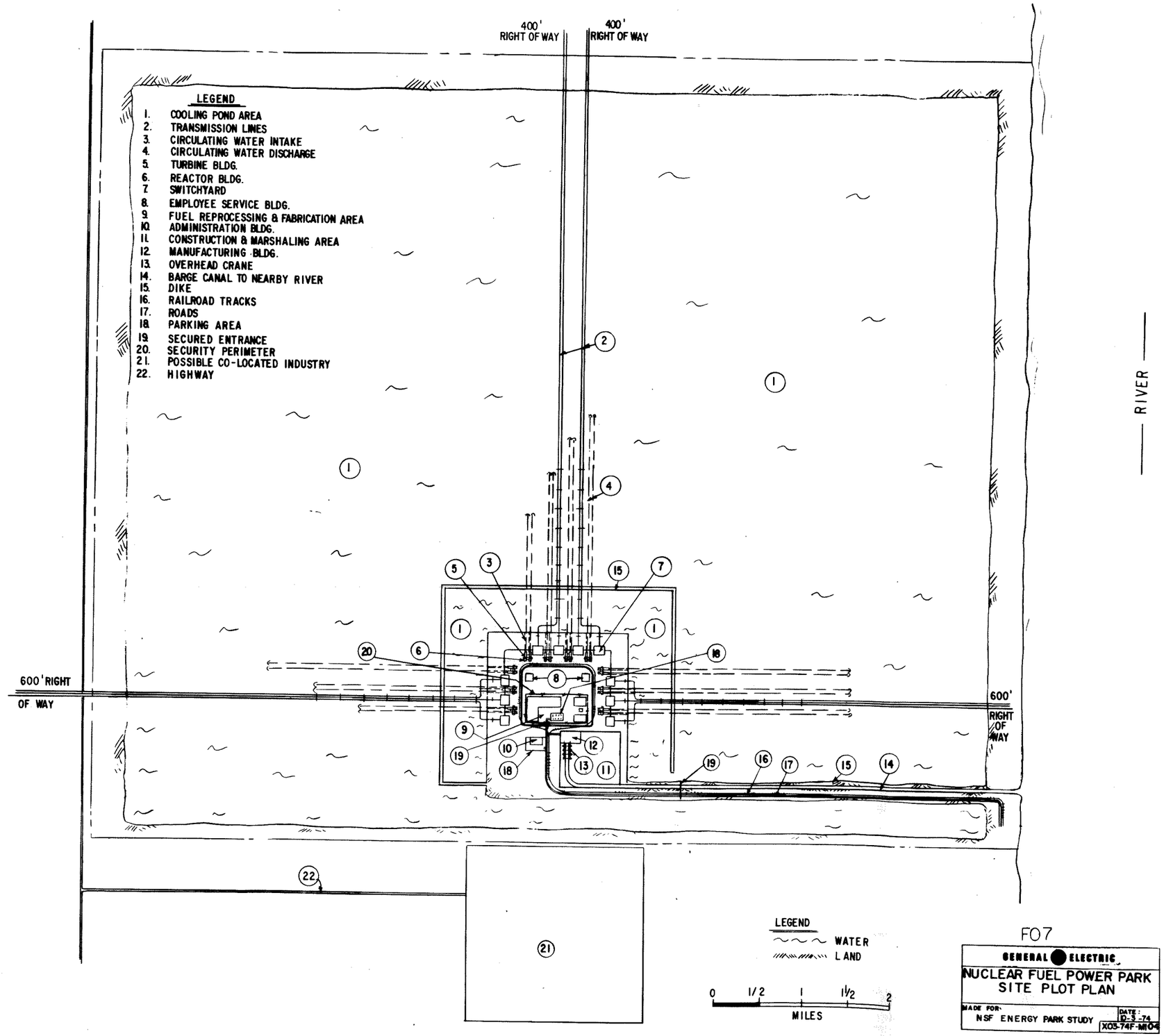

F07

GENERAL ELECTRIC

NUCLEAR FUEL POWER PARK
SITE PLOT PLAN

MADE FOR: NSF ENERGY PARK STUDY

DATE: 10-3-74

X03-74F-MI04

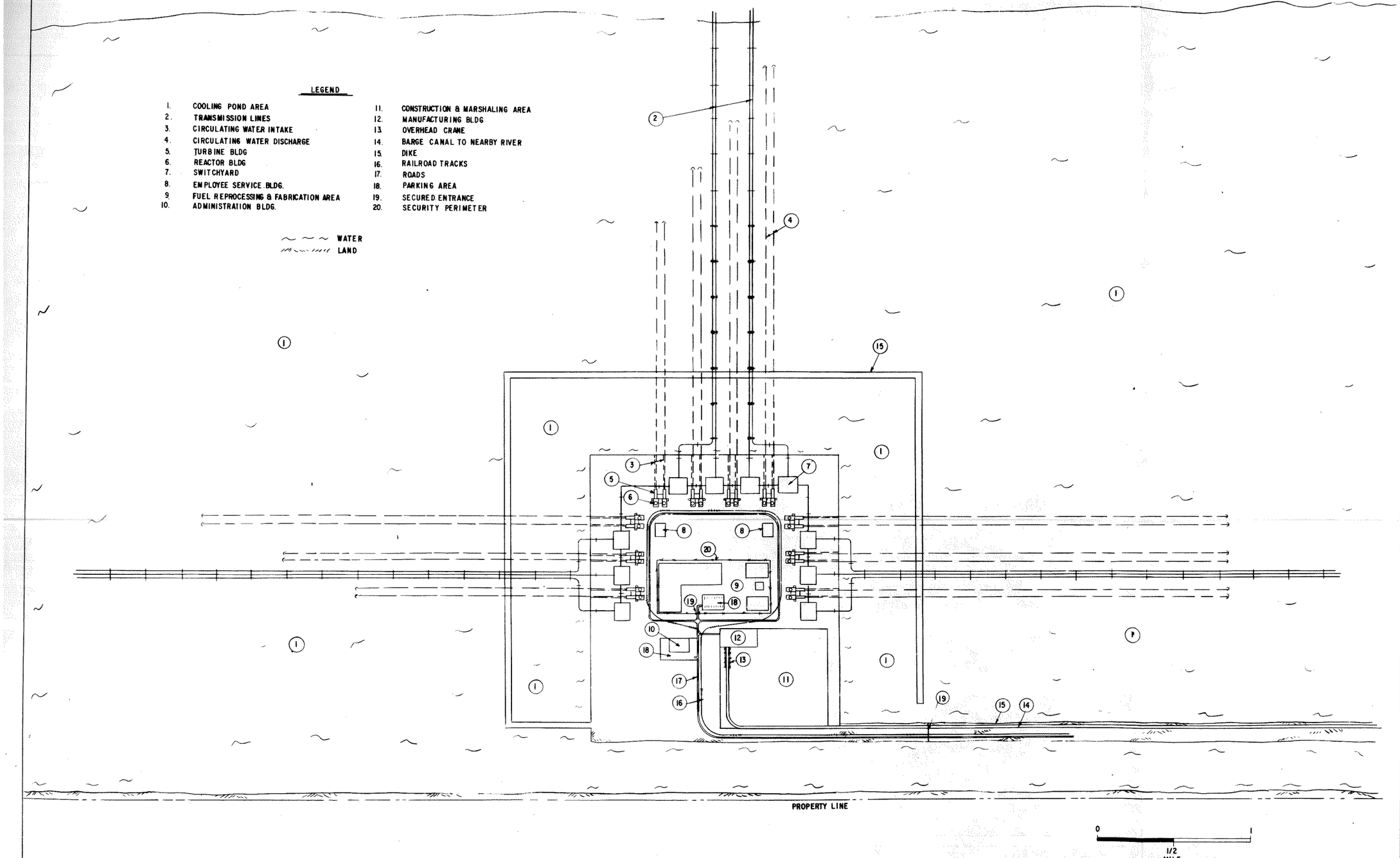

F08

TITLE NUCLEAR FUEL POWER PARK PARTIAL PLOT PLAN	GENERAL ELECTRIC — PROJECTS ENGINEERING OPERATION — INSTALLATION AND SERVICE ENGINEERING DEPT SCHENECTADY, N.Y. U.S.A.
MADE FOR: NSF ENERGY PARK STUDY	
REQ	FILE NO. X03-74 · DRAWN BY · SCALE 1"=1200' · DRAWING NO. X03-74F-M103 · REV. 0

REVISION NO. BY DATE

X03-74F-M103

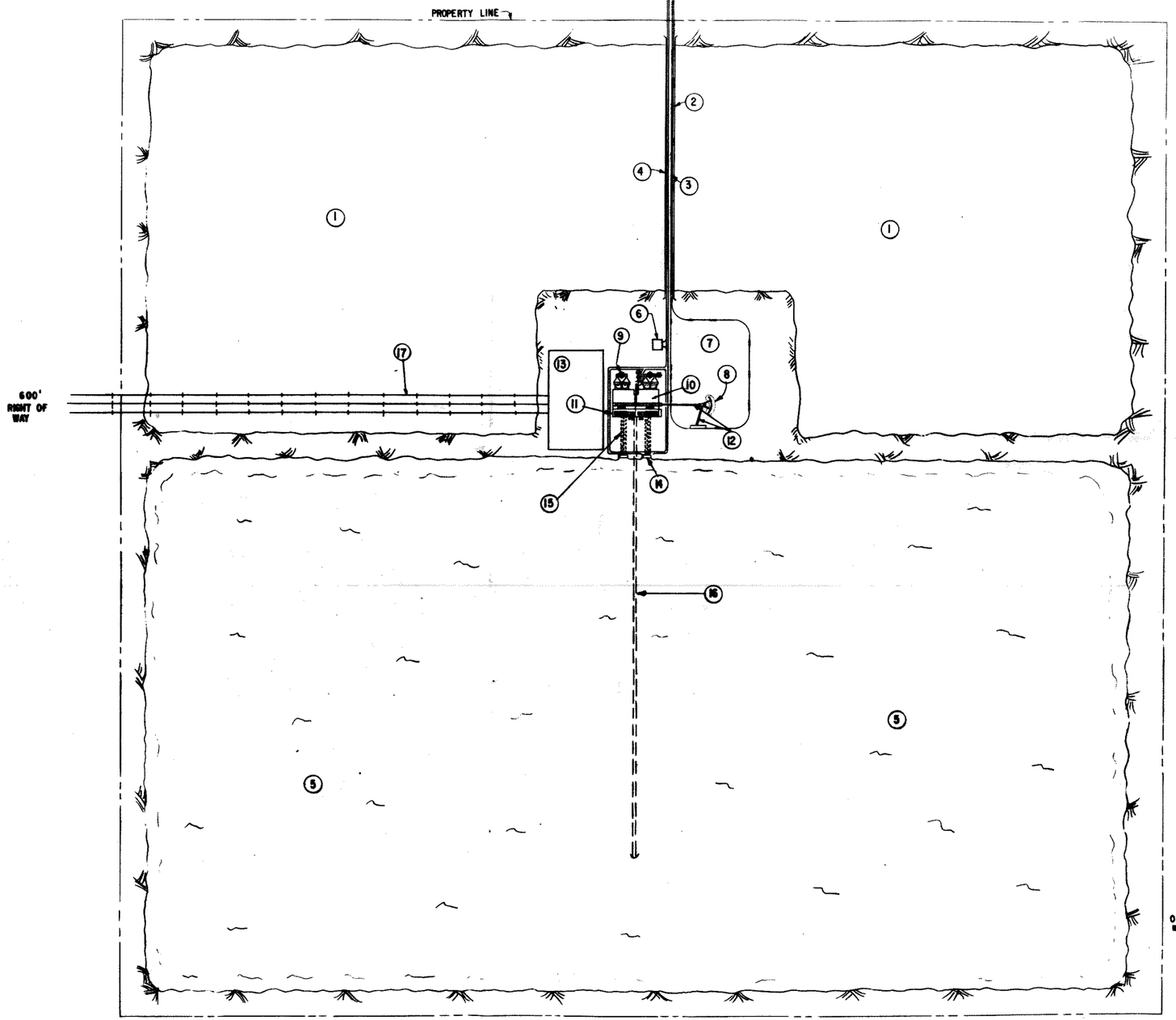

LEGEND

1 WASTE & SLUDGE AREA
2 ACCESS AREA
3 RAILROAD
4 ROAD
5 COOLING POND AREA
6 ADMINISTRATION BLDG
7 UNCRUSHED COAL STORAGE
8 LIVE COAL STORAGE AREA
9 STACK
10 BOILER
11 TURBINE BAY
12 CONVEYORS
13 SWITCHGEAR
14 INTAKE STRUCTURE
15 CIRCULATING WATER INTAKE
16 CIRCULATING WATER DISCHARGE
17 TRANSMISSION LINE

LEGEND

WATER

LAND

0 1/4 1/2 3/4 1
MILE

F09

REVISION		
NO	BY	DATE

TITLE: FOSSIL FUEL DISPERSED SITE PLOT PLAN

SHOWN FOR: NSF ENERGY PARK STUDY

GENERAL ELECTRIC
PROJECTS ENGINEERING OPERATION
INSTALLATION AND SERVICE ENGINEERING DEPT.
SCHENECTADY, N.Y. U.S.A.

FILE NO. X03-74 | DRAWN BY Lorne Rentzepis | SCALE 1" = 600' | DRAWING NO. X03-74F-M102 | REV. 0

X03-74F-M102

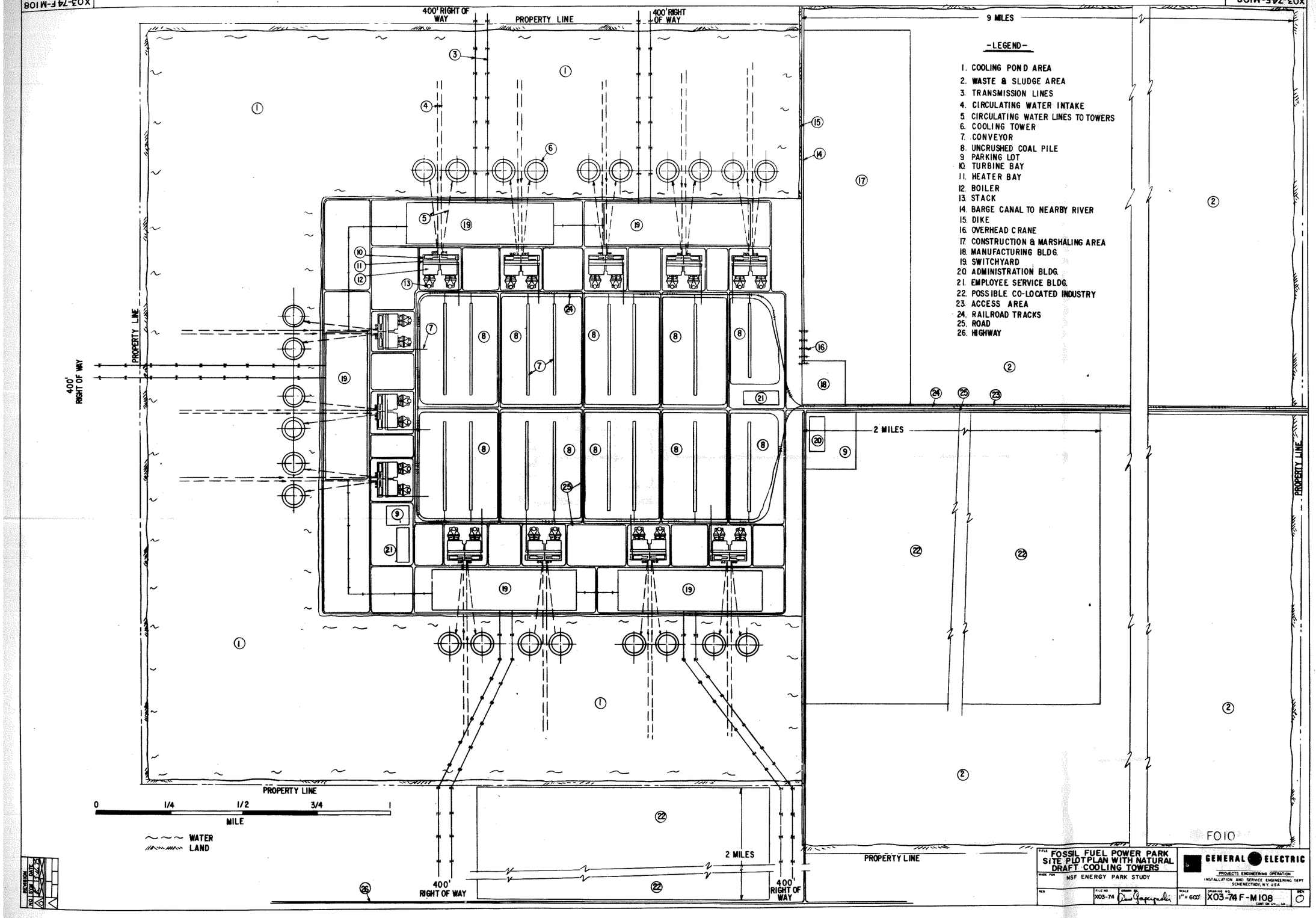
400' RIGHT OF WAY
PROPERTY LINE
400' RIGHT OF WAY
9 MILES
-LEGEND-
1. COOLING POND AREA
2. WASTE & SLUDGE AREA
3. TRANSMISSION LINES
4. CIRCULATING WATER INTAKE
5. CIRCULATING WATER LINES TO TOWERS
6. COOLING TOWER
7. CONVEYOR
8. UNCRUSHED COAL PILE
9. PARKING LOT
10. TURBINE BAY
11. HEATER BAY
12. BOILER
13. STACK
14. BARGE CANAL TO NEARBY RIVER
15. DIKE
16. OVERHEAD CRANE
17. CONSTRUCTION & MARSHALING AREA
18. MANUFACTURING BLDG.
19. SWITCHYARD
20. ADMINISTRATION BLDG.
21. EMPLOYEE SERVICE BLDG.
22. POSSIBLE CO-LOCATED INDUSTRY
23. ACCESS AREA
24. RAILROAD TRACKS
25. ROAD
26. HIGHWAY
PROPERTY LINE
400' RIGHT OF WAY
2 MILES
PROPERTY LINE
0 1/4 1/2 3/4 1
MILE
WATER
LAND
2 MILES
400' RIGHT OF WAY
400' RIGHT OF WAY
PROPERTY LINE
F010
REVISION
NO. DATE
TITLE FOSSIL FUEL POWER PARK SITE PLOTPLAN WITH NATURAL DRAFT COOLING TOWERS
MADE FOR NSF ENERGY PARK STUDY
GENERAL ELECTRIC
PROJECTS ENGINEERING OPERATION
INSTALLATION AND SERVICE ENGINEERING DEPT
SCHENECTADY, N.Y. U.S.A.
FILE NO X03-74
SCALE 1" = 600'
DRAWING NO. X03-74 F-M108
REV 0

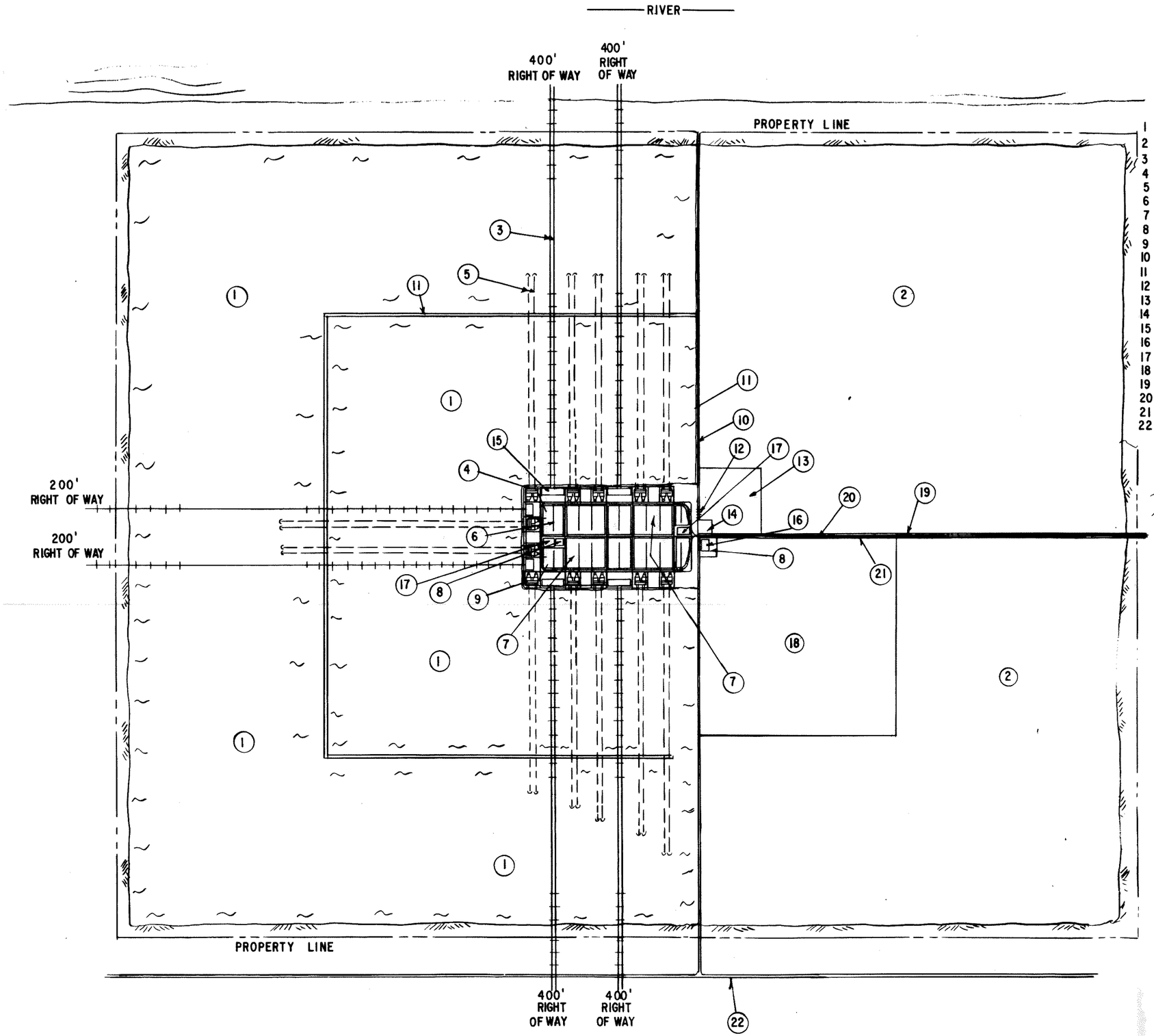

LEGEND

1 COOLING POND AREA
2 WASTE & SLUDGE AREA
3 TRANSMISSION LINES
4 CIRCULATING WATER INTAKE
5 CIRCULATING WATER DISCHARGE
6 CONVEYOR
7 UNCRUSHED COAL PILES
8 PARKING AREA
9 FOSSIL FUEL POWER PLANT
10 BARGE CANAL TO NEARBY RIVER
11 DIKE
12 OVERHEAD CRANE
13 CONSTRUCTION & MARSHALING AREA
14 MANUFACTURING BLDG
15 SWITCHYARD
16 ADMINISTRATION BLDG
17 EMPLOYEE SERVICE BLDG
18 POSSIBLE CO-LOCATED INDUSTRY
19 ACCESS AREA
20 RAILROAD TRACKS
21 ROAD
22 HIGHWAY

WATER
LAND

0 1/2 1 1½ 2
MILES

F011

GENERAL ELECTRIC

FOSSIL FUEL POWER PARK
SITE PLOT PLAN

MADE FOR NSF ENERGY PARK STUDY

DATE 2-5-75

X03-74F-M106

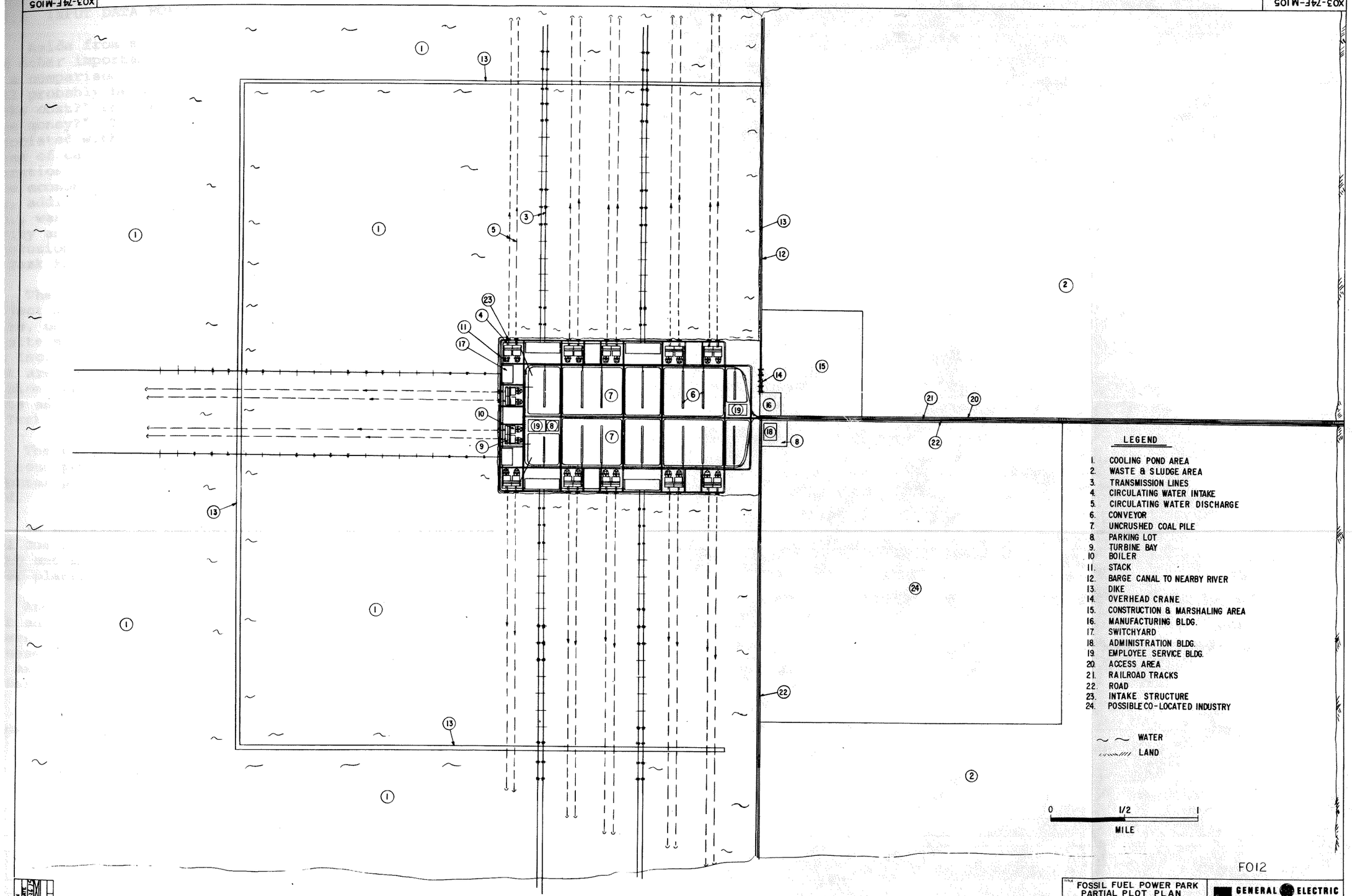

F012

REVISION		
NO.	DATE	
1	2-14-75	

TITLE: FOSSIL FUEL POWER PARK PARTIAL PLOT PLAN			GENERAL ELECTRIC	
MADE FOR: NSF ENERGY PARK STUDY			PROJECTS ENGINEERING OPERATION INSTALLATION AND SERVICE ENGINEERING DEPT SCHENECTADY, N.Y. U.S.A.	
NES	FILE NO. X03-74	DRAWN BY	SCALE 1" = 1200'	DRAWING NO. X03-74F-M105	REV. 0

X03-74F-M105

1/2.5 INPUT DATA FOR COST BENEFIT AND SENSITIVITY ANALYSIS

Aside from sociological, environmental, institutional and other important aspects of energy parks to be considered in a comparison to dispersed sites, the one question which will probably be asked the most is, "What will energy parks cost?" followed by the question, "Will energy parks save money?" To address the task of comparing the costs associated with energy parks and dispersed sites in the areas of capital costs, construction economies, fuel costs, operation and maintenance costs and operation and maintenance economies a computer program for handling the bookkeeping, adding interest during construction and escalation, etc., was written in order to perform cost-benefit sensitivity analyses. The program, its output and the cost conclusions to be drawn from this study are the contents of Task 9.

The input data for the computer program is the main subject of Section 1/2.5. The capital costs for generating units, on-site fuel fabrication and reprocessing facilities, on-site manufacturing facilities, and other common facilities are included in Section 1/2.5.1. The only capital costs that are not included are those related to power transmission away from the dispersed sites and parks. These costs and the associated land requirements are the subject of Task 3.

The capital costs associated with the purchase of land for both park and dispersed sites are handled by the computer program in Task 9 by assuming a per acre cost for land.

In addition to capital costs this section contains fuel costs, fossil and nuclear, and representative operating and maintenance costs for both fossil and nuclear power plants. These are contained in Section 1/2.5.2.

Another category of important inputs for the cost benefit and sensitivity analysis are the multiple unit (learning) factors that are used by the computer program to assess the potential savings in capital and operation and maintenance costs attributable to energy parks. These factors are reported in Sections 1/2.5 - 1/2.7.

Aside from dollar cost inputs for energy parks and dispersed sites there are other quantitative inputs for

which data are provided in Task 1/2. These inputs include land requirements given in Section 1/2.4, water requirements in Section 1/2.8 and estimates of labor requirements discussed in Section 1/2.5.9. Regional variations in capital costs are discussed in Section 1/2.5.8.

Sections 1/2.5.3 and 1/2.5.4 deal with the rationale and supporting information for the costs and other quantities provided as inputs to the computer program.

1/2.5.1 Capital Costs

This section contains capital cost input data used for the cost-benefit and sensitivity analysis the results of which are reported in Task 9. Most of the data is presented in tabular form.

The costs are in January 1, 1975 dollars. The computer program used in connection with Task 9 will escalate these costs and add interest during construction to the time of start-up for commercial operation of each of the units. The costs are developed on a consistent basis for both fossil and nuclear units and while the costs could vary to some degree based on the geographic region (to be discussed later) and on the work scope chosen for any other estimate, it should be recognized that the primary use of these capital costs is to make a comparison between fossil energy parks and fossil dispersed siting and between nuclear dispersed sites and nuclear energy parks, as was the stated goal of this study. With this in mind it is important to consider differences between capital costs of power generating facilities located on the two types of sites.

A discussion of the basis for establishing these capital costs will be included in Sections 1/2.5.3 and 1/2.5.4.

1/2.5.1.1 CAPITAL COSTS - NUCLEAR UNITS. Capital cost estimates for dispersed site and energy park nuclear units are based on the General Electric Company's 238-732, BWR-6, Mark III Boiling Water Reactor.

The turbine-generator selected for this application is a General Electric 6-flow 43" last-stage-blades, single reheat unit rated at 1220MW (1480 Mva, 0.9PF). This plant configuration was selected because it is representative of the unit size most commonly selected by utilities in recent months. Further, the BWR design was chosen for this study

because it is considered to be representative of current LWR construction in the United States.

For the dispersed site case, a construction cycle of 66 months following receipt of a construction permit has been selected. This appears to be most representative of current industry planning. For the 20-unit energy park, a construction cycle of 50 months following start of construction work on the nuclear unit has been selected based on the C.F. Braun and Company study appearing as an appendix to Task 4 of this report.

The capital cost estimate for the first unit at a dispersed site, and the corresponding pattern of expenditures, is presented in Table 1/2.5-1. The capital cost estimate for the first unit at a 20-unit nuclear energy park is shown in Table 1/2.5-2.

Cost data in these tables are in terms of January 1975 dollars, exclusive of escalation-to-completion costs and interest during construction.

The capital cost estimates of Tables 1/2.5-1 and 1/2.5-2 also include customer site preparation. Site conditions can, and often do, differ widely, even within small geographical areas. For this reason, it has been assumed in each case that the terrain is topographically amenable to power plant construction and that sites are located in close proximity to existing highways and rail lines. Further, it is assumed that all of the energy park and dispersed sites are fully barge-accessible. This will permit direct-to-site shipment of factory assembled reactor pressure vessels and other heavy components.

The capital costs for the 1220MW unit were ratioed up to the 1300MW size before being input into the cost-benefit sensitivity analysis program, Task 9.

1/2.5.1.2 NUCLEAR FUEL REPROCESSING AND REFABRICATION PLANT COST DATA. Plant project costs and expenditure schedules for spent fuel reprocessing and mixed-oxide fuel fabrication facilities for a 4-unit mini-park and a 20-unit energy park are summarized in Tables 1/2.5-3 to 1/2.5-8. These data were developed from the general cost relationships as a function of plant capacities to be discussed in Task 4. It is assumed that project scheduling would be based on completing facilities no sooner than needed. It should be feasible to use the spent fuel storage facilities while the remainder of the plant is being completed.

TABLE 1/2.5-1

PATTERN OF EXPENDITURES
FIRST UNIT OF DUAL PLANT
238-732, BWR-6, MARK III - 1220 MWe
(In $1000)

Year Following C.P. Award	1	2	3	4	5	6	Total
DIRECT COST							
Civil & Structural							
Labor	10,120	16,106	7,822	5,747	1,135	-	
Materials	10,702	20,104	8,323	7,008	1,078	-	
Generation Turbine & Elec. Plt. Equip't							
Labor	86	759	13,182	16,326	6,251	453	
Materials	3,415	9,638	25,499	22,933	6,832	-	
Heat Rejection System							
Labor	-	745	2,234	2,678	1,633	144	
Materials	-	2,450	6,941	6,941	3,674	408	
Nuclear Steam Supply System	9,400	15,100	26,500	9,400	3,200	-	
Turbine-Generator	8,600	15,800	22,600	1,000	-	-	
SUBTOTAL: DIRECT	42,323	80,702	113,101	72,033	23,803	1,005	332,967
INDIRECT COSTS							
Labor	19,645	30,695	39,991	46,130	26,749	13,506	
Materials	2,755	4,305	5,609	6,470	3,751	1,894	
SUBTOTAL: INDIRECT	22,400	35,000	45,600	52,600	30,500	15,400	201,500
Expended Prior to Construction Permit*							24,000
TOTAL COST - FIRST UNIT	64,723	115,702	158,701	124,701	53,303	16,405	558,467

* Includes Engineering and NSSS costs incurred prior to award of construction permit:
First Year Before C.P. - 12,800
Second Year Before C.P. -11,200

TABLE 1/2.5-2
PATTERN OF EXPENDITURES
FIRST UNIT OF 20-UNIT ENERGY PARK
238-732, BWR-6, MARK III - 1220 MWe
(In $1000)

Year Following C.P. Award	1	2	3	4	5	Total
DIRECT COST						
Civil & Structural						
Labor	12,117	12,988	4,309	587		
Materials	20,588	22,936	4,002	445		
Generation Turbine & Elec. Plt. Equip't						
Labor	60	5,847	16,153	3,445	436	
Materials	6,222	19,276	36,501	6,318	-	
Heat Rejection Sys.						
Labor	-	1,041	2,082	1,977	104	
Materials	1,021	4,491	8,778	5,920	204	
Nuclear Steam Supply System	9,400	15,100	26,500	9,400	3,200	
Turbine-Generator	8,600	15,800	22,600	1,000	-	
SUBTOTAL: DIRECT	58,008	97,479	120,925	29,092	3,944	309,448
INDIRECT COSTS						
Labor	25,163	25,163	30,787	25,307	7,426	
Materials	9,737	9,737	11,913	9,793	2,874	
SUBTOTAL: INDIRECT	34,900	34,900	42,700	35,100	10,300	157,900
Expended Prior to Construction Permit*						24,600
TOTAL COST - FIRST UNIT	92,908	132,379	163,625	64,192	14,244	491,948

* Includes Engineering and NSSS costs incurred prior to award of construction permit:
First Year Before C.P. - 13,900
Second Year Before C.P. - 10,700

TABLE 1/2.5-3
DEDICATED (NUCLEAR PARK)
REPROCESSING PLANT CAPITAL COSTS

(1975 Dollars in Millions)

	4 unit Mini Park 160 MTU/Year		20 unit Park 800 MTU/Year	
	M&E **	Labor	M&E	Labor
Land				
Acreage*	7		7	
Permits & Licenses	--	3.7	--	3.9
Site Structures & Facilities	10.0	6.7	25.0	13.0
Plant Equipment	37.7	24.2	82.0	51.0
Indirect Costs	2.0	29.0	3.0	50.0
Contingency Costs	15.3	19.4	33.0	35.1
	66.0	83.0	143.0	153.0
Totals	149.0		296.0	

* Requirements for location of reprocessing and support facilities assuming that controlled access area and isolation distance requirements are within those for the multiple reactor installations; also that there will be centralized park potable water supply and sanitary/non-process sewage disposal systems rather than separate facilities and associated area requirements for the re-processing plant. If not, 15 - 20 acres more would be required for sewage lagoons, evaporation pond, etc.

** Materials and Equipment

TABLE 1/2.5-4

PROJECTED EXPENDITURE SCHEDULE

4 UNIT MINI PARK CASE - 160 MTU/YR. DEDICATED (NUCLEAR PARK) REPROCESSING PLANT

(1975 Dollars in Millions)

		YEAR FOLLOWING CONSTRUCTION START OF FIRST REACTOR									
		4	5	6	7	8	9	10	11	12	13
Land											
Permits & Licenses	Labor	0.1	0.3	0.4	0.4	0.5	0.5	0.5	0.4	0.4	0.2
Structures & Facilities	M&E	0.0	0.0	0.0	1.2	4.5	3.1	1.0	0.2	0.0	0.0
	Labor	0.0	0.0	0.0	0.5	1.9	2.2	1.8	0.3	0.0	0.0
Plant Equipment	M&E	0.0	0.0	0.0	3.5	6.5	8.0	12.7	6.5	0.5	0.0
	Labor	0.0	0.0	0.0	0.2	3.0	3.8	5.8	10.0	1.4	0.0
Indirect Costs	M&E	0.0	0.0	0.0	0.5	1.0	0.5	0.0	0.0	0.0	0.0
	Labor	2.3	4.5	3.6	3.0	3.7	3.5	2.8	2.5	2.5	0.6
Contingency	M&E	0.0	0.0	0.0	1.5	3.5	3.6	3.9	2.6	0.2	0.0
	Labor	0.7	1.1	1.3	1.4	2.7	3.0	3.3	4.0	1.3	0.6

Based on reprocessing plant spent fuel storage facility availability in year 11 and start of reprocessing operations in year 13.

TABLE 1/2.5-5
PROJECTED EXPENDITURE SCHEDULE

20 UNIT PARK CASE - 800 MTU/YR. DEDICATED (NUCLEAR PARK) REPROCESSING PLANT

(1975 Dollars in Millions)

		YEAR FOLLOWING CONSTRUCTION START OF FIRST REACTOR														
		4	5	6	7	8	9	10	11	12	13	14	15	16	17	18
Land																
Permits & Licenses	Labor	0.1	0.3	0.4	0.3	0.3	0.3	0.2	0.2	0.3	0.3	0.1	0.3	0.4	0.3	0.1
Struct. & Facil.	M&E	0.0	0.0	0.0	1.2	7.2	5.6	0.0	0.0	0.0	0.0	3.8	6.0	1.2	0.0	0.0
	Labor	0.0	0.0	0.0	0.6	3.0	3.8	0.6	0.0	0.0	0.0	1.5	2.5	1.0	0.0	0.0
Plant Equipment	M&E	0.0	0.0	0.0	4.0	10.5	8.0	0.5	0.0	0.0	0.0	9.0	30.0	18.0	2.0	0.0
	Labor	0.0	0.0	0.0	0.3	5.2	6.5	1.0	0.0	0.0	0.0	1.0	15.0	20.2	1.8	0.0
Indirect Costs	M&E	0.0	0.0	0.0	0.5	1.0	0.5	0.0	0.0	0.0	0.0	0.8	0.2	0.0	0.0	0.0
	Labor	2.5	5.0	4.0	3.0	3.0	4.0	2.0	3.0	4.5	4.0	3.0	4.0	4.0	3.0	1.0
Contingency	M&E	0.0	0.0	0.0	1.5	5.7	4.2	0.8	0.0	0.0	0.0	4.0	10.0	6.0	0.8	0.0
	Labor	0.7	1.1	1.3	1.5	3.3	4.5	1.3	1.1	1.3	1.3	1.4	6.5	7.7	1.6	0.5

Based on early completion and licensing of reprocessing plant spent fuel storage facilities but deferral of processing system completion until sufficient spent fuel backlog is accumulated to support start-up and operation at the full design rate, i.e. spent fuel storage capability available starting in year 11 and reprocessing system start-up in year 18.

TABLE 1/2.5-6
DEDICATED (NUCLEAR PARK)
MO_2 FUEL FAB. PLANT CAPITAL COSTS

(1975 Dollars in Millions)

	4 unit Mini Park 53 $MTMO_2$**/Year		20 unit Park 265 $MTMO_2$/Year	
	M&E	Labor	M&E	Labor
Land				
Acreage*	5		5	
Permits and Licenses	--	3.0	--	3.5
Site Structures & Facilities	5.7	3.2	13.0	7.4
Plant Equipment	9.7	2.3	22.5	5.3
Indirect Cost	0.4	8.8	0.9	16.3
Contingency	4.7	5.2	11.1	9.5
	20.5	22.5	47.5	42.0
	43.0		89.5	

* Requirements for location of MO_2 fuel fabrication and support facilities assuming integration with reprocessing plant (scrap recovery, waste treatment and packaging, etc.) and with overall park facilities (potable water supply, sanitary/non-process sewage, etc.)

** Metric Tons of Mixed Oxide Fuel

TABLE 1/2.5-7

PROJECTED EXPENDITURE SCHEDULE

4 UNIT MINI PARK - 53 $MTMO_2$/YR. DEDICATED (PARK) FUEL FABRICATION PLANT

(1975 Dollars in Millions)

		YEAR FOLLOWING CONSTRUCTION START OF FIRST REACTOR						
		7	8	9	10	11	12	13
Permits & Licenses	Labor	0.2	0.6	0.5	0.2	0.3	0.8	0.4
Structure & Facilities	M&E	0.0	0.0	0.0	1.6	2.3	1.6	0.2
	Labor	0.0	0.0	0.0	0.9	1.3	0.9	0.1
Plant Equipment	M&E	0.0	0.0	0.5	2.0	3.2	2.5	1.5
	Labor	0.0	0.0	0.0	0.3	0.5	0.8	0.7
Indirect Costs	M&E	0.0	0.0	0.0	0.3	0.1	0.0	0.0
	Labor	1.1	1.3	1.4	1.3	1.2	1.1	1.4
Contingency	M&E	0.0	0.0	0.1	1.1	1.7	1.3	0.5
	Labor	0.4	0.6	0.6	0.8	0.9	1.0	0.9

Based on start-up coinciding with that of 160 MTU*/yr. dedicated (park) reprocessing plant.

*Metric Tons of Uranium

TABLE 1/2.5-8

PROJECTED EXPENDITURE SCHEDULE

20 UNIT PARK CASE - 265 $MTMO_2$/YR. DEDICATED (PARK) FUEL FABRICATION PLANT

(1975 Dollars in Millions)

		YEAR FOLLOWING CONSTRUCTION START OF FIRST REACTOR							
		11	12	13	14	15	16	17	18
Permits & Licenses	Labor	0.2	0.7	0.6	0.2	0.4	0.9	0.4	0.1
Struct. & Facilities	M&E	0.0	0.0	0.0	2.9	4.8	3.7	1.6	0.0
	Labor	0.0	0.0	0.0	1.6	2.3	2.1	1.2	0.2
Plant Equipment	M&E	0.0	0.0	0.9	4.7	6.5	6.1	4.2	0.1
	Labor	0.0	0.0	0.0	0.5	1.4	1.7	1.5	0.2
Indirect Costs	M&E	0.0	0.0	0.4	0.5	0.0	0.0	0.0	0.0
	Labor	1.8	2.2	2.4	2.2	2.0	2.0	2.3	1.4
Contingency	M&E	0.0	0.0	0.3	2.4	3.4	2.9	2.1	0.0
	Labor	0.6	0.9	1.0	1.2	1.6	1.9	1.7	0.6

Based on start-up coinciding with that of 800 MTU/yr. dedicated (Park) reprocessing plant.

1/2.5.1.3 ON-SITE FACTORY COSTS FOR NUCLEAR ENERGY PARKS A comparison of the total plant estimates in Tables 1/2.5-1 and 1/2.5-2 indicate that, in terms of 1975 dollars, the first unit at a 20-unit energy park costs $66,519,000 less than the first unit at a 2-unit dispersed site or a 4-unit mini-park site. This savings in nuclear unit construction cost has been made possible by the application of modular construction techniques at the 20-unit nuclear energy park. These modular construction techniques are described in Sections 4.11.5 - 4.11.7 of this report.

The modular construction techniques require the construction, on the site, of a module-assembly plant. The basic objective of this approach is to transfer construction labor away from the actual plant location (where working conditions are relatively unfavorable due to weather and congestion effects) to the controlled working environment of a construction facility (the module assembly plant). This transfer of construction labor results in improved labor productivity, both within the module assembly facility and with respect to the construction labor remaining at the reactor plant site proper.

The estimated cost of the modular assembly plant in terms of 1975 cost levels is $64,500,000 exclusive of escalation-to-completion costs and interest during construction. These costs are distributed as shown in Table 1/2.5-9.

While the initial capital cost of the module assembly plant largely offsets the savings anticipated with respect to the first energy park unit, the continuing availability of the module assembly plant should make possible substantial savings on all successive energy park nuclear units.

The module assembly plant can service up to eight nuclear units from a single location. As a result, it will be necessary to relocate the facility at least twice during the construction of the 20-unit nuclear energy park. The cost of each such relocation is estimated at $21,500,000. This cost element has been incorporated into the total nuclear energy park cost data presented in Task 9.

1/2.5.1.4 TRAINING CENTER COSTS. Another cost element for a 20-unit energy park that has been incorporated into the input cost data for cost-benefit-sensitivity analysis of Task 9 is the cost of an on-site training center which would include laboratories, classrooms, training simulators, etc. The costs assumed for this facility are

TABLE 1/2.5-9

MODULE - ASSEMBLY PLANT COSTS

FOR 20 UNIT NUCLEAR PARK

Year After Award	Millions (1975)	Expenditure
0 - 1	.5	Engineering
1 - 2	1.5	Engineering
2 - 3	2.0	Engineering
3 - 3.5	1.0	Engineering
3 - 3.5	10.0	Construction
Labor	(4.1)	
Material	(5.9)	
3.5 - 4	30.0	Construction
Labor	(12.3)	
Material	(17.7)	
4 - 5	19.5	Construction
Labor	(8.0)	
Material	(11.5)	
TOTAL COST	64.5	

Relocation costs for module assembly plant equals 21,500,000 in 1975 dollars.

Assembly plant would be moved a minimum of two times.

TABLE 1/2.5-10

TRAINING CENTER COSTS

ASSUMED FOR ENERGY PARKS

NUCLEAR

	COSTS 1975 MILLIONS
2 Nuclenet* Simulators	7.0
50,000 Ft^2 Facility	5.0
Furnishings	1.0
TOTAL	13.0

Training center would be completed 2 1/2 years prior to initial fuel loading of first reactor. These costs are included as park site front end costs.

FOSSIL

	COSTS 1975 MILLIONS
3 Simulators	5.3
40,000 Ft^2 Facility	4.0
Furnishings	.7
TOTAL	10.0

These training center costs are also included as fossil park site front end costs.

*GE Trademark

tabulated in Table 1/2.5-10. The training center is to be be built so that operator training can begin at least 2 1/2 years prior to start-up of unit 1 in the energy park. The costs for a similar facility to be built in a fossil fueled energy park are also included in this table and will not be repeated elsewhere.

1/2.5.1.5 CAPITAL COSTS - FOSSIL UNITS. Capital cost estimates for dispersed site and energy park fossil fired units are based on three different capacity steam turbine-generator units which are described in Section 1/2.3. The rationale for selecting units with ratings of 885MW, 1075MW and 1320MW is fully outlined in that section.

For the dispersed site case, a 51 month construction cycle following receipt of construction permit was selected. This appears to be the most representative of current industry planning. For the 24-unit fossil-fueled energy park case, a construction cycle of 48 months following start of construction has been selected based on the discussion of modularization for fossil energy parks found in Section 1/2.6.

The capital cost estimates and corresponding patterns of expenditures for the first 885MW, first 1075MW, and first 1320MW unit at dual unit dispersed sites are presented in Tables 1/2.5-11, 1/2.5-12 and 1/2.5-13, respectively. The capital cost estimates, and patterns of expenditure for the first unit of each of the size ratings to be installed in a 24-unit fossil-fueled energy park are shown in Tables 1/2.5-14, 1/2.5-15 and 1/2.5-16, respectively.

Cost data in these tables are in terms of January 1975 dollars exclusive of escalation to completion costs and interest during construction.

As in the nuclear case, the capital costs shown in these six tables include customer site preparation charges.

1/2.5.1.6 ON-SITE FACTORY COSTS FOR FOSSIL ENERGY PARK The savings in fossil unit construction cost is made possible in part by an on-site module assembly facility. The capital costs assumed for this facility were $9.8 million dollars. A description of this facility is contained in Section 1/2.6. The estimate of training center costs for a fossil energy park is shown in Table 1/2.5-10.

TABLE 1/2.5-11
PATTERN OF EXPENDITURES
FIRST UNIT OF A DUAL UNIT PLANT
885 MW FOSSIL FIRED UNITS
(Millions of Dollars)

Year Following C.P. Award	1	2	3	4	5	Total
DIRECT COST						
Structures & Facilities						
Labor	7.2	7.2	4.9	2.1	.1	
Materials	6.1	6.3	4.0	1.9	.1	
Generation Turbine & Electric Plant Equip.						
Labor	15.5	15.9	20.0	5.9	.5	
Materials	26.5	28.0	34.8	10.3	.9	
Heat Rejection System						
Labor	--	--	4.6	4.7	2.0	
Materials	--	--	6.0	5.9	1.7	
Environmental Prot. Sys.						
Labor	--	4.2	10.6	10.7	3.0	
Materials	--	8.8	21.5	22.1	5.8	
Turbine Generator	4.3	7.9	11.2	.5	--	
SUBTOTAL: DIRECT	59.6	78.3	117.6	64.1	14.1	
INDIRECT COSTS						
Labor	13.4	10.9	8.2	7.9	1.5	
Materials	5.2	6.8	6.8	5.5	.9	
SUBTOTAL: INDIRECT	18.6	17.7	15.0	13.4	2.4	
Expended Prior to Construction Permit*						18.1
TOTAL COST - FIRST UNIT	78.2	96.0	132.6	77.5	16.5	418.9

* Includes Engineering and site survey costs prior to award of construction permit:
First Year Before C.P. - 9.6
Second Year Before C.P. - 8.5

TABLE 1/2.5-12
PATTERN OF EXPENDITURES

First Year Before C.P. - [illegible]
Second Year Before C.P. - 8.5

TABLE 1/2.5-12
PATTERN OF EXPENDITURES
FIRST UNIT OF A DUAL UNIT PLANT
1075MW FOSSIL FIRED UNITS
(Millions of Dollars)

Year Following C.P. Award	1	2	3	4	5	Total
DIRECT COST						
Structures & Facilities						
Labor	8.2	8.2	5.5	2.4	.1	
Materials	7.0	7.2	4.5	2.2	.1	
Generation Turbine & Electric Plant Equip.						
Labor	17.7	18.1	22.9	6.7	.6	
Materials	29.9	31.7	39.2	11.6	.9	
Heat Rejection System						
Labor	--	--	5.6	5.6	1.3	
Materials	--	--	6.9	6.9	2.0	
Environmental Prot. Sys.						
Labor	--	4.9	11.8	12.3	3.5	
Materials	--	10.0	24.5	25.3	6.7	
Turbine Generator	5.2	9.5	13.5	.6	--	
SUBTOTAL: DIRECT	68.0	89.6	134.4	73.6	15.2	
INDIRECT COSTS						
Labor	15.3	12.5	9.2	9.0	1.9	
Materials	5.8	7.8	7.6	6.3	1.2	
SUBTOTAL: INDIRECT	21.1	20.3	16.8	15.3	3.1	
Expended Prior to Construction Permit*						20.7
TOTAL COST - FIRST UNIT	89.1	109.9	151.2	88.9	18.3	478.1

* Includes Engineering and site survey costs prior to award of construction permit:
First Year Before C.P. - 11.0
Second Year Before C.P. - 9.7

TABLE 1/2.5-13
PATTERN OF EXPENDITURES
FIRST UNIT OF A DUAL UNIT PLANT
1320 MW FOSSIL FIRED UNITS
(Millions of Dollars)

Year Following C.P. Award	1	2	3	4	5	Total
DIRECT COST						
Structures & Facilities						
Labor	8.9	8.9	6.0	2.5	.1	
Materials	7.6	7.8	4.9	2.4	.1	
Generation Turbine & Electric Plant Equip.						
Labor	19.2	19.7	24.8	7.3	.5	
Materials	31.6	33.4	41.5	12.3	.9	
Heat Rejection System						
Labor	-	-	6.1	6.1	1.8	
Materials	-	-	7.5	7.5	2.1	
Environmental Prot. Sys.						
Labor	-	5.2	13.0	13.2	3.8	
Materials	-	10.8	26.4	27.1	7.7	
Turbine Generator	6.1	11.2	16.0	.7	-	
SUBTOTAL: DIRECT	73.4	97.0	146.2	79.1	17.0	
INDIRECT COSTS						
Labor	16.6	13.4	9.8	9.8	2.2	
Materials	6.3	8.6	8.3	7.0	1.0	
SUBTOTAL: INDIRECT	22.9	22.0	18.1	16.8	3.2	
Expended Prior to Construction Permit*						22.3
TOTAL COST - FIRST UNIT	96.3	119.0	164.3	95.9	20.2	518.0

* Includes Engineering and site survey costs prior to award of construction permit:
First Year Before C.P. - 11.7
Second Year Before C.P. - 10.6

TABLE 1/2.5-14
PATTERN OF EXPENDITURES
FIRST UNIT OF A SERIES OF EIGHT

TABLE 1/2.5-14
PATTERN OF EXPENDITURES
FIRST UNIT OF A SERIES OF EIGHT
885 MW FOSSIL UNITS TO BE BUILT IN 24 UNIT ENERGY PARK
(Millions of Dollars)

Year Following C.P. Award	1	2	3	4	Total
DIRECT COST					
Structures & Facilities					
Labor	6.8	6.8	4.6	2.0	
Materials	6.3	6.5	4.2	2.0	
Generation Turbine & Electric Plant Equip.					
Labor	14.7	15.1	19.3	5.8	
Materials	26.5	28.0	34.8	11.3	
Heat Rejection System					
Labor	--	2.6	4.8	3.3	
Materials	3.0	4.0	6.0	1.0	
Environmental Prot. Sys.					
Labor	2.8	3.9	10.0	10.1	
Materials	5.8	9.0	21.6	22.2	
Turbine Generator	4.3	7.9	11.2	.5	
SUBTOTAL: DIRECT	70.2	83.8	116.5	58.2	
INDIRECT COSTS					
Labor	12.8	10.5	7.7	8.6	
Materials	5.8	7.4	7.4	6.6	
SUBTOTAL: INDIRECT	18.6	17.9	15.1	15.2	
Expended Prior to Construction Permit*	—	—	—	—	16.9
TOTAL COST - FIRST UNIT	88.8	101.7	131.6	73.4	412.4

* Includes Engineering and site survey costs prior to award of construction permit:
First Year Before C.P. - 9.5
Second Year Before C.P. - 7.4

TABLE 1/2.5-15
PATTERN OF EXPENDITURES
FIRST UNIT OF A SERIES OF EIGHT
1075 MW FOSSIL UNITS TO BE BUILT IN 24 UNIT ENERGY PARK
(Millions of Dollars)

Year Following C.P. Award	1	2	3	4	Total
DIRECT COST					
Structures & Facilities					
Labor	7.3	7.3	4.9	2.3	
Materials	7.2	7.5	4.9	2.6	
Generation Turbine & Electric Plant Equip.					
Labor	15.8	16.2	20.5	6.3	
Materials	30.0	31.8	39.4	12.8	
Heat Rejection System					
Labor	--	2.8	5.2	3.6	
Materials	3.5	4.6	6.9	1.2	
Environmental Prot. Sys.					
Labor	3.1	4.4	10.6	11.1	
Materials	6.6	10.0	24.6	25.3	
Turbine Generator	5.2	9.5	13.5	.6	
SUBTOTAL: DIRECT	78.7	94.1	130.5	65.8	
INDIRECT COSTS					
Labor	13.8	11.4	8.4	9.0	
Materials	6.6	9.1	8.8	8.3	
SUBTOTAL: INDIRECT	20.4	20.5	17.2	17.3	
Expended Prior to Construction Permit*	—	—	—	—	18.5
TOTAL COST - FIRST UNIT	99.1	114.6	147.7	83.1	463.0

* Includes Engineering and site survey costs prior to award of construction permit:
First Year Before C.P. - 10.6
Second Year Before C.P. - 7.9

TABLE 1/2.5-16
PATTERN OF EXPENDITURES
FIRST UNIT OF A SERIES OF EIGHT

TABLE 1/2.5-16
PATTERN OF EXPENDITURES
FIRST UNIT OF A SERIES OF EIGHT
1320 MW FOSSIL UNITS TO BE BUILT IN 24 UNIT ENERGY PARK
(Millions of Dollars)

Year Following C.P. Award	1	2	3	4	Total
DIRECT COST					
Structures & Facilities					
Labor	7.5	7.5	5.0	2.2	
Materials	8.2	8.5	5.3	2.7	
Generation Turbine & Electric Plant Equip.					
Labor	16.2	16.7	21.0	6.3	
Materials	31.8	33.6	41.6	13.5	
Heat Rejection System					
Labor	--	2.9	5.3	3.7	
Materials	3.8	5.1	7.6	1.3	
Environmental Prot. Sys.					
Labor	3.2	4.4	10.9	11.1	
Materials	7.8	10.9	26.6	27.3	
Turbine Generator	6.1	11.2	16.0	.7	
SUBTOTAL: DIRECT	84.6	100.8	139.3	68.8	
INDIRECT COSTS					
Labor	13.9	11.4	9.1	9.1	
Materials	7.7	10.5	10.1	9.7	
SUBTOTAL: INDIRECT	21.6	21.9	19.2	18.8	
Expended Prior to Construction Permit*					18.8
TOTAL COST - FIRST UNIT	106.2	122.7	158.5	87.6	493.8

* Includes Engineering and site survey costs prior to award of construction permit:
First Year Before C.P. - 10.6
Second Year Before C.P. - 8.2

1/2.5.2 Operation and Maintenance Costs

Three types of costs make up operation and maintenance costs. These are fixed charges, maintenance and operating, and fuel costs. Fixed charges are handled in this study by applying a fixed percentage (fixed charge rate) to the total capital investment in power generation equipment. Fixed charge rate is one of the parameters varied for sensitivity analysis in Task 9.

Operating and maintenance costs for operators and maintenance men and necessary expendable materials for both fossil and nuclear units which have been assumed for this study are summarized in Table 1/2.5-17. In the fossil case some discussion of these costs can be found in Section 1/2.7.5 where environmental protection systems are considered.

The operation and maintenance costs apply to the first unit at a dual unit dispersed site and the first unit of each output rating at an energy park. Successive units will benefit from operator experience, maintenance experience, better spare parts inventory, and the operation and maintenance costs on these successive units will be reduced by operation and maintenance multiple unit relative cost factors discussed subsequently.

Fuel costs are discussed in two places in this report. Nuclear fuel cycle costs are the subject of substantial study in Task 4 and fossil fuel cycle costs are covered in Section 1/2.9. Two tables summarizing the fuel costs used in the Task 9 cost-benefit study are included here for completeness of this cost section. These are Tables 1/2.5-18, nuclear and 1/2.5-19, fossil.

In Task 9, additional generating capacity is required to make up for the predicted difference in transmission losses for a park compared to dispersed sites so that both parks and dispersed sites will be generating exactly the same output in the cost comparison of the two types of sites.

This make-up capacity was assumed to be provided by simple cycle gas turbines. Data for these gas turbines is reported in Table 1/2.5-20.

Other ways to provide this additional generating capacity are discussed in Task 9.

TABLE 1/2.5-17

OPERATION AND MAINTENANCE COSTS

FOSSIL UNITS

Unit Size	Mills/Kwhr	10^6 $/Year
885 MW		
Labor	1.34	7.79
Materials	1.66	9.65
Total	3.00	17.44*
1075 MW		
Labor	1.27	8.97
Materials	1.63	11.51
Total	2.90	20.48*
1320 MW		
Labor	1.21	10.49
Materials	1.59	13.79
Total	2.80	24.28*

*Based on a 75% capacity factor includes cost to maintain SO_2 Scrubbing equipment.

NUCLEAR UNITS

1300 MW		
Labor	.50	4.52
Material	.59	5.41
Total	1.09	9.93**

**Based on an 80% capacity factor

GAS TURBINES

Maintenance assumed to be 2.0 mills/Kwhr

1/2.5.3 Discussion of Capital Costs - Nuclear Units

Dispersed Sites - The cost estimates of Table 1/2.5-1 reflect the best judgement of the total cost of constructing the first nuclear power plant unit at a 2- or 4-unit site. Since no such unit of this design has yet been completed, cost elements have been extrapolated from historic data on earlier nuclear units and adjusted for current design, code, licensing and quality assurance requirements.

For purposes of this study, total plant estimates were broken down into the following components:

.... Civil and structural facilities
.... Steam generation, turbine, and electrical plant equipment (exclusive of nuclear steam supply system/turbine-generator equipment)
.... Heat rejection system including condenser cooling water pump/motors and piping, cooling towers, and cooling tower supply, discharge and make-up piping and pump/motors, but excluding the condenser proper.
.... Nuclear steam supply system, at current market price
.... Turbine-generator, at current market price
.... Indirect costs, including temporary construction, construction equipment, construction services, design engineering and procurement, construction management, preliminary operation/testing, contingency, and other indirect costs

The overall schedule for the first unit at a dispersed site requires 96 months, or eight years. From the date of contract award to the nuclear steam supply system vendor to the receipt of a Construction Permit is assumed to require 30 months. (Some limited site work may be initiated prior to the Construction Permit.) A cycle of 66 months is assumed for construction of the first unit -- from Construction Permit to Commercial Operation. For succeeding units at a dispersed site, it is assumed that construction is initiated 66 months prior to the required Commercial Operation date. A summary of the construction schedule assumptions for all of the units considered in this study is shown in Table 1/2.5-21.

The pattern of expenditures for field construction work has been developed on the basis of the 30/66 month schedule. Work performed prior to the Construction Permit consists almost exclusively of engineering, procurement, and construction management services performed by equipment suppliers, architect/engineer firms, and by the utility.

TABLE 1/2.5-18
NUCLEAR FUEL CYCLE COSTS
FOR COST BENEFIT AND SENSITIVITY ANALYSIS

Example Breakdown of Principal Fuel Costs:

	¢/MBTU
Ore and losses in conversion	10
Conversion	1
Separative Work (Enrichment)	7
Plutonium Feed (Pu Substitute for U-235)	1
Fabrication (Pu and U) and losses	8
U Recovered (Credit)	-4
Pu Recovered (Credit)	-3
Reprocessing	8
Interest	7
TOTAL	35

Fuel Cycle Cost Inputs To Computer Program As A Function of Escalation Rate:

Escalation Rate			Nuclear Fuel Cycle Costs Mills/Kwhr					
			YEAR					
Case	Mat'l	Labor	1975	1980	1985	1990	1994	2020
1	5%/yr	6%/yr	3.20	4.18	5.43	6.87	8.24	27.46
2	8%/yr	10%/yr	3.20	4.92	7.52	11.20	15.31	140.90

Fuel cycle cost variations with Fixed Charge Rate, Present Worth Factor, and Capacity Factor are not shown.

More Discussion of nuclear fuel cycle costs is contained in Chapter 4.

TABLE 1/2.5-19

FOSSIL FUEL COSTS USED FOR

COST BENEFIT SENSITIVITY ANALYSIS

COAL - (Eastern, 12000 BTU/lb)
Cost at Mine Mouth (1975 dollars) - $12.75/Ton

Representative Transportation Costs by Unit Train

DISTANCE	$/TON
350 miles	6.69
700 miles	9.21

Total Cost For Coal:

DISTANCE	$/TON	¢/10^6BTU
350 miles	19.44	81.
700 miles	21.96	91.5

For Computer Runs with Inflation Coal Costs will BE Inflated As Follows:

ESCALATION

Labor	Material	Fuel
6%/yr.	5%/yr.	5.5%/yr.
10%.yr.	8%/yr.	9%/yr.

Increasing coal costs due to depletion of supply are not accounted for in this representative data.

TABLE 1/2.5-20

GAS TURBINE DATA

When the Cost Benefit - Sensitivity Analysis Computer Program calls for the installation of gas turbines to make up for differences in power delivered due to transmission loss differences between an energy park and a dispersed site, the following data is used:

Capital Cost Installed	$115/KW
Operation & Maintenance Costs	2.0 mills/Kwhr
Fuel Cost based on: $\$1.89/10^6$ BTU, $11.5/BBL 6.1×10^6 BTU/BBL Oil	19.8 mills/Kwhr

Escalation Rate Used

	Labor	Material	Oil
Case 1	6%/yr.	5%/yr.	5.5%/yr.
Case 2	10%/yr.	8%/yr.	9.0%/yr.

Energy Park - The cost estimates of Table 1/2.5-2 reflect the total cost of constructing the first nuclear power plant unit at a 20-unit site. Since this unit is of identical design to that of the first unit at the dispersed site, the same design, code, licensing, and quality assurance requirements are applicable.

Schedule Considerations - In the case of the first unit of the energy park, it is assumed that modules will be available from the module-assembly plant described in Section 4.11.6. Thus, construction work on the first unit must necessarily be initiated somewhat later after the date of contract award than would be the case at a dispersed site. Further, it seems likely that it will take longer (12 months) to secure a construction permit for a 20-unit site than for a 4- or 8-unit site because of the added impact of such a large concentration of power generation facilities.

Nevertheless, there are significant schedule savings available through application of the module assembly plant concept. Actual nuclear unit construction time is reduced to 50 months, rather than the 66 months estimated for the dispersed site units.

For these reasons, the following schedule assumptions have been made with respect to the first unit at a 20-unit nuclear energy park:

Start module assembly plant const.	-36 months after award
Construction Permit	-42 months after award
Start first unit construction	-48 months after award
First (concrete) modules available From module assembly plant	-48 months after award
Complete construction of module assembly plant	-60 months after award
First unit commercial operation	-98 months after award

In spite of the one-year delay in the start of first unit construction for the energy park with respect to the dispersed site case, the estimated commercial operation date for the energy park first unit is only two (2) months later than the projected commercial operation date for the first unit at a dispersed site.

The second and all subsequent units, the energy park can match (or improve upon) the scheduled commercial operation dates for the dispersed site units.

TABLE 1/2.5-21

CONSTRUCTION SCHEDULE

ASSUMPTIONS FOR ENERGY PARK STUDY

TYPE OF PLANT	AWARD TO CONST. PERMIT	PERMIT TO COMM. OP.	TOTAL
	(MONTHS)		
Fossil Dispersed	18	51	69
Fossil Park	18	48	66
Nuclear Dispersed and 4 Unit Mini Park	30	66	96

NUCLEAR PARK (20 UNITS) Schedule - Months After Award

Start "Factory" (Module Assembly Plant Const)	36		
Construction Permit	42		
Start First Unit Using Modules	48		
Complete Factory	60		
First Unit Commercial Oper.	98		
Nuclear Park Summary	48	50	98

Capital Cost Reductions - As discussed in Section 1/2.5.1.3, a basic objective of the modular construction approach is to transfer construction labor away from the actual plant construction location and into the controlled working environment of a module assembly plant. Such a transfer results in improved labor productivity, both within the module assembly facility and with respect to the construction labor remaining at the reactor plant site proper.

The productivity improvement which can be achieved, varies widely from craft to craft, and depends on the specific construction task being analyzed. Although productivity improvements of up to a factor of "4" appeared attainable in selected cases of repetitive tasks, a conservative overall productivity improvement factor of "2" was used for labor transferred to the module assembly plant.

This productivity improvement factor is based on studies carried out by C.F. Braun and Company in connection with an actual refinery construction project. Work measurement units were carefully developed for construction operations carried out in a module assembly facility and compared with work measurement units for comparable construction operations performed in the field. Productivity improvement factors ranged from "1.5" to "4.0". An overall factor of "2" appears to be a conservative and realistic choice.

A corollary benefit of the transfer of construction labor to the module assembly plant is an improvement in the productivity of labor manhours remaining at the reactor plant location due to reduced congestion.

It is difficult to establish with certainty the extent to which specific field construction tasks are amenable to transfer to the module assembly plant. Basic assumptions have been made with respect to the principal tasks to be transferred. Nevertheless, the performance location of a significant portion of the construction work remains in question. Resolution must await the finalization of detailed construction plans and schedules for both the reactor site and the module assembly plant locations.

For this reason, two cases have been analyzed, reflecting different portions of plant construction labor transferred to the module assembly plant.

The first, or reference, case assumes the transfer of 53.6% of conventional direct manhours to the module assembly plant. It is based on a craft-by-craft estimate of amenability to such transfer. A productivity multiplier of 0.5 was assumed for that portion of the labor transferred to the module assembly plant. For the portion of the labor remaining at the reactor site, a productivity multiplier of 0.93 was assumed, resulting from the reduced congestion at the site.

The combined effects of these improvements in productivity is a reduction of 30% in direct construction manhours.

Construction Labor Reduction

REFERENCE CASE

	Conventional Construction	Productivity Multiplier	Modular Construction
% Transferred	53.6	0.50	26.8
% Remaining	46.4	0.93	43.2
TOTAL	100.0%		70.0%
Reduction	Base		30.0%

This reference case served as the basis for the cost data presented in Table 1/2.5-2, "Pattern of Expenditures - First Unit of a 20-Unit Energy Park."

To evaluate the impact of a less extensive transfer of field construction labor to the module assembly plant, a second, or alternate, case was developed.

This alternate case utilizes the percentages of labor transfer to the module assembly plant contained in Table 4-5

of the C. F. Braun study, which appears as an appendix to Task 4 of this report. Additional assumptions were made with respect to those structures and locations not included in the Braun table (e.g., Diesel/Generator Building, intake/discharge structures, switchyard).

A productivity multiplier of 0.5 was again assumed for that portion of the labor transferred to the module assembly plant. For the portion of the labor remaining at the reactor site, however, a somewhat higher productivity multiplier of 0.96 was assumed than for the reference case. Since a smaller proportion of plant construction labor is transferred to the module assembly plant in this case, the congestion problem at the reactor site will not be improved to the same degree as in the reference case.

Construction Labor Reduction

ALTERNATE CASE

	Conventional Construction	Productivity Multiplier	Modular Construction
% Transferred	38.5	0.50	19.3
% Remaining	61.5	0.96	59.1
TOTAL	100.0%		78.4%
Reduction	Base		21.6%

In terms of cost (1975 dollars), the alternate case is $12,496,000 more costly than the reference case, reflecting the reduced savings in direct construction labor (21.6% vs. 30.0%) and associated indirect costs.

The net impact of this cost increase is to reduce the capital cost savings of the first unit at a 20-unit energy park as compared to the first unit at a 2- or 4-unit dispersed site from the $66,519,000 for the reference case to $54,023,000 for the alternate case.

Cost estimates in this report are consistent with the assumption that commerical operation dates are scheduled at one-year intervals to conform with system load growth requirements.

Beyond this there remains a substantial potential savings in both time and cost inherent in the energy park - module assembly plant concept for a hypothetical case where generating capacity equivalent to the output of many units is critically needed as rapidly as possible. This is a consequence of the shortened construction schedule for each nuclear energy park unit. No attempt has been made to quantify the potential savings available through such cumulative schedule shortening.

1/2.5.4 Discussion of Capital Costs - Fossil Units

Dispersed Sites - The cost estimates of Tables 1/2.5-11 to 1/2.5-13 are based partly on the cost estimate for a 1000MW coal fired plant contained in WASH 1230,* Reference 1 and on an update of that estimate found in WASH 1345, Reference 2.

The process for preparing the estimates was to take the January 1, 1971 cost from WASH 1230, add the $10 million caused by design changes and the $50 million for a flue gas desulfurization system in 1971 dollars as specified by WASH 1345. These 1971 costs were then escalated to January 1975 assuming that labor had risen 25% during this time span and that materials had increased by 75%. To these 1975 costs an increment was added to change from once-through cooling to an evaporative natural draft cooling tower. Additional environmental protection features and contingency costs were also accounted for before arriving at the final January 1975 costs for a 1000MW coal fired unit. Scale factors contained in WASH 1345 were applied to the 1000MW costs to arrive at the capital costs for the first 885MW, 1075MW and 1320MW units at dual unit sites.

The costs were then distributed into the various categories shown in the tables, split into material and labor components and then allocated over the 51 month construction cycle discussed previously according to expenditure patterns consistent with those found in industry practice.[3]

*WASH numbers refer to Atomic Energy Commission Reports listed in the References, Section 1/2.12.

Energy Park - The cost estimates for the first units of each size, 885, 1075 and 1320MW, to be constructed in a 24-unit fossil energy park shown in Tables 1/2.5-14 to 1/2.5-16 are based on the estimates for dispersed sites discussed above. The direct labor portions of those estimates for first units were reduced to reflect savings on the construction costs by using some of the modular concepts for fossil units discussed in Section 1/2.6 where the specifics of this reduction are reported.

The costs were then allocated over the 48 month construction cycle assumed for the fossil energy park.

The successive units will come on line at one year intervals and their costs will be discussed in Sections 1/2.5.5 and 1/2.5.6 on multiple unit relative cost factors, which follow.

1/2.5.5 Multiple Unit Relative Cost Factors - Nuclear Units

In evaluating the economies inherent in repetitive construction of nuclear units of identical design, costs were divided into five categories:

... Direct construction labor
... Direct material and equipment
... Nuclear steam supply system
... Turbine-generator
... Indirect costs

For each of these cost elements, estimates were developed for the relative cost on succeeding units with respect to the corresponding cost for the first unit. This approach was followed for both the dispersed site and energy park cases.

Dispersed Site - Following is a summary of multiple unit relative cost factors for the 2-unit dispersed site and 4-unit mini-park cases:

Unit No.	Direct Labor	Direct Mat'l & Equipment	NSSS*	T-G**	Indirect Costs
1	1.00	1.00	1.00	1.00	1.00
2	0.94	0.95	0.97	1.00	0.72
3	0.93	0.95	0.95	1.00	0.60
4	0.88	0.92	0.95	1.00	0.55

* Nuclear Steam Supply System
** Turbine-Generator

These relative cost factors reflect two categories of savings:

--Reduction in certain structural and equipment requirements associated with the second-of-a-pair nuclear unit, principally civil/structural aspects (about 75%). Specifically, significant reductions are estimated for such items as circulating water facilities, and such shared structures as the administration, service, and water treatment buildings. With respect to plant equipment proper, the urgency of achieving standardized nuclear plant design, precluded the inclusion of shared nuclear facilities except for the radwaste system/building and the control building. In these cases, the relatively minor incremental cost of expanding first-unit facilities to accept a second unit appeared to justify the extremely minor second-unit modifications to the standardized design assumed for all other components of the nuclear plant.

These considerations do not apply to the third unit of a four-unit mini-park. We have assumed that shared facilities would not be extended beyond two units. Hence, the third unit would be essentially identical to the first unit.

--"Learning Curve", Multiple-Buy and Standardized Design effects are responsible for the largest share of succeeding unit cost reductions.

The magnitude of construction labor productivity improvement on repetitive nuclear plant construction will depend primarily on the stability of the work force. This will depend, in turn, on the state of the economy generally, and competitive demands for the crafts involved from other construction activity in the same geographical area. It is assumed that these factors will be less disruptive in the future than they have been in the past and that a more stable and responsive labor force will be recruited and deployed.

"Multiple Buy" effects reflect cost reductions available through the simultaneous purchase of material and equipment for two or four units. The nature of these markets is such that major price concessions are generally available for two and four unit purchases. Rarely do such price reductions exceed 10% and are often below this.

Of critical importance to the realization of succeeding unit cost reductions is the achievement of a standardized plant design for all nuclear units. The assumption of such a standardized plant design underlies all cost estimates appearing in this work, and is responsible, in large measure, for the expected economies associated with multiple-unit construction at both the dispersed site and energy park.

For the dispersed site and mini park cases, we have estimated that design engineering costs for the second unit will be 50% of the first unit's cost; for the third unit, 30% of first unit cost; and for the fourth unit, 20% of the first unit cost.

Design Engineering costs are included in "Indirect Costs" in the tabulation of multiple unit relative cost factors.

Any significant modification to the standardized design of the nuclear units will not only erase most of the potential savings in design engineering, but will have significant impact on other nuclear unit cost components. In addition to extending the overall construction schedule with consequent increases in escalation and interest during construction costs, "learning curve," multiple-buy and other cost reduction opportunities will be severely diminished.

Energy Park - Following is a summary of multiple unit relative cost factors for the energy park reference case:

Unit No.	Direct Labor	Direct Mat'l & Equipment	NSSS	T - G	Indirect Costs
1	1.00*	1.00*	1.00*	1.00*	1.00*
2	0.96	0.93	0.97	1.00	0.72
3	0.94	0.91	0.95	1.00	0.65
4	0.93	0.90	0.95	1.00	0.61
5	0.93	0.90	0.95	1.00	0.61
6	0.93	0.90	0.95	1.00	0.61
7	0.93	0.90	0.95	1.00	0.61
8	0.93	0.90	0.95	1.00	0.61
9	0.93	0.90	0.95	1.00	0.73**
10	0.93	0.90	0.95	1.00	0.61

Unit No.	Direct Labor	Direct Mat'l & Equipment	NSSS	T - G	Indirect Costs
11	0.93	0.90	0.95	1.00	0.61
12	0.93	0.90	0.95	1.00	0.61
13	0.93	0.90	0.95	1.00	0.61
14	0.93	0.90	0.95	1.00	0.61
15	0.93	0.90	0.95	1.00	0.73**
16	0.93	0.90	0.95	1.00	0.61
17	0.93	0.90	0.95	1.00	0.61
18	0.93	0.90	0.95	1.00	0.61
19	0.93	0.90	0.95	1.00	0.61
20	0.97	0.90	0.95	1.00	0.62

For the alternate energy park case described in Section 1/2.5.3., the "Direct Labor" and "Indirect Costs" multiple unit relative cost factors will differ somewhat from those listed above. Multiple unit relative cost factors for the other components --Direct Material & Equipment, NSSS, and T-G -- remain unchanged.

Following is a tabulation of "Direct Labor" and "Indirect Costs" multiple unit relative cost factors for the energy park Alternate case:

Unit No.	Direct Labor	Indirect Costs
1	1.11*	1.03*
2	1.06	0.75
3	1.04	0.68
4	1.02	0.64
5	1.00	0.63
6	1.00	0.63
7	1.00	0.63
8	1.00	0.63
9	1.00	0.76*
10	1.00	0.63
11	1.00	0.63
12	1.00	0.63
13	1.00	0.63
14	1.00	0.63
15	1.00	0.76**
16	1.00	0.63
17	1.00	0.63
18	1.00	0.63
19	1.00	0.63
20	1.07	0.64

* The relative cost factors used for Unit No. 1 refer to the Reference case first unit costs at the 20-unit energy park, as presented in Table 1/2.5-2.

** The increase in "Indirect Costs" factor for Units 9 and 15 is accounted for by the relocation of the module assembly plant after the 8th and 14th units.

Again, these relative cost factors reflect the two categories of savings as discussed in Section 1/2.5.5:

... Reduction in certain structural and equipment requirements associated with the second-of-a-pair nuclear unit, and,
... Learning Curve, Multiple Buy and Standardized Design Effects.

The pattern of savings from these effects differs significantly from that described for the dispersed site case (Section 1/2.5.5). Most of the construction labor productivity improvement results from transfer of labor from the reactor location to the module assembly plant. The controlled working environment of the module assembly plant makes possible much greater improvements in labor productivity than could be achieved by "learning curve" benefits through repetitive construction at the individual reactor sites.

The module assembly plant not only provides improved ambient conditions, but makes possible the effective utilization of special tools, jigs, and fixtures not practical at the reactor sites proper. These and other benefits are described in Section 4.11.5.

While the major reason for construction labor productivity improvement is the module assembly plant, some "learning curve" improvement is possible for field construction labor on units following the first. These will be somewhat reduced from those presented for the dispersed site case, since assembly operations will be more efficiently carried out for the first unit of the energy park through use of the module assembly plant.

The need for a standardized design is even more essential for the module-assembly plant energy park concept than for the dispersed site case. Significant design changes would not only disrupt construction schedules but could very well necessitate costly modifications to the design and construc-

tion of the module assembly plant. Consequences could be severe in terms of overall cost, and could very well negate the entire feasibility of the modular approach.

Multiple-buy effects will be little different from the dispersed site case.

1/2.5.6 Multiple Unit Relative Cost Factors - Fossil Units

In evaluating the economies in repetitive construction of fossil units of identical design, costs were divided into categories:

--Direct Construction Labor
- Structures
- Generation Plant Equipment
- Heat Rejection System
- Environmental Protection Systems

--Direct Material and Equipment
- Structures
- Generation Plant Equipment
- Heat Rejection System
- Environmental Protection Systems

--Indirect Costs
- Labor
- Materials

--Unit Costs Expended Prior to Receipt of Construction Permit

--Turbine Generator

For each of these cost elements, estimates were developed for the relative costs on succeeding units with respect to the corresponding cost for the first unit. This approach was followed for both the dispersed site and energy park cases.

Table 1/2.5-21 is a summary of the multiple unit relative cost factors for the fossil-fueled dispersed site case. These relative cost factors reflect two categories of savings.

--Reduction in certain structural and equipment requirements associated with the second-of-a-pair fossil unit, principally civil/structural aspects (about 75%). Specifically, significant reductions are estimated for such items as circulating water facilities, and such shared structures as the administration, service and water treatment buildings.

--"Learning Curve," Multiple-Buy and Standardized Design effects are responsible for the largest share of succeeding unit cost reductions.

The magnitude of construction labor productivity improvement on repetitive fossil plant construction will depend primarily on the stability of the work force. This will depend, in turn, on the state of the economy generally and competitive demands for the crafts involved from other construction activity in the same geographical area. It is assumed that these factors will be less disruptive in the future than they have been in the past and that a more stable and responsive labor force will be recruited and deployed.

As in the nuclear case, "Multiple Buy" effects apply to the fossil case. Standardized plant design is also critical for the fossil plants if succeeding unit cost reductions are to be achieved.

The basis for the dual unit savings factors of Table 1/2.5-22 is the dual unit estimate found in WASH 1345 for 1300MW coal fired units with SO_2 removal systems. These factors are assumed to hold for the 885MW, 1075MW, and 1320MW units.

For the 24 unit fossil energy park case multiple unit relative cost factors are shown in Table 1/2.5-23.

Since a large energy park with a large number of identical units has never been built up to this time, it is necessary to make estimates of the possible savings based on a rather limited data base. In this data base goes experience of other industries such as the C.F. Braun study in an appendix to Task 4, previous studies such as those found in Reference 4, 5, and 6 and the opinion of those experienced with construction projects. The multiple unit relative cost factors shown in Table 1/2.5-23 for the 24-unit energy park were chosen as a consequence of studying the aforementioned data base. In the sensitivity analysis to be reported in Task 9, a computer run was made in which the multiple unit cost factors were reduced so that only 50% of the estimated savings would occur to see how much this affects the overall comparison between 12 dual unit fossil dispersed sites and one 24-unit fossil energy park.

The multiple unit relative cost factors for fossil plants as shown in Table 1/2.5-23 appear to lead to a larger reduction of the first unit capital cost on successive units than those shown previously for the nuclear units in the nuclear energy park. This is due to the fact that the unit base cost for the first unit in the nuclear energy park was reduced significantly as a result of the estimated savings on that unit through modularization. While some reduction in first unit base cost for the first unit in a fossil energy park was assumed, the amount was relatively minor. For further discussion of this aspect of the fossil unit miltiple unit factors see Section 1/2.6.

1/2.5.7 Multiple Unit Relative Cost Factors - Operation and Maintenance

Another category of multiple unit relative cost factors remains. This is the set of factors assumed to estimate the cost savings potential in operating and maintaining the units in an energy park. These factors for both fossil and nuclear units reflect the savings which would occur through better operator and maintenance training and effectiveness, reduced parts replacement time due to a larger on-site supply of spare parts, better feedback from one unit to the next to permit inspection and preventitive measures this preventing identical problems on other units, and other factors.

The multiple unit relative cost factors for operation and maintenance are shown in Table 1/2.5-24. These factors when applied produce a labor cost which will pay for a labor force similar in size to the proposed staffing by utilities of multiple unit plants. Note that, as in the case of relative cost factors for capital costs, the materials (needed for maintenance purposes) are not drastically reduced by these factors. The only savings in materials will occur from discounts received upon large quantities of supplies, the potential for better storage and retrieval system for these supplies, and a well planned nonwasteful use of these supplies.

1/2.5.8 Regional Effects On Cost of Power Plant Construction

Wage Rate Differentials - the capital cost estimates for construction of the module-assembly plant and nuclear energy units are based on craft wage rates prevalent in the Chicago area.

TABLE 1/2.5-22
RELATIVE COST FACTORS FOR
TWO UNIT FOSSIL DISPERSED SITE

CATEGORY	UNIT NUMBER 1	UNIT NUMBER 2
DIRECT COSTS		
Labor		
Structures	1.0	.75
Generation Equipment	1.0	.80
Heat Rejection System	1.0	.91
Environmental Protection Systems	1.0	.91
Equipment & Materials		
Structures	1.0	.79
Generation Equipment	1.0	.92
Heat Rejection System	1.0	.95
Environmental Protection Systems	1.0	.95
INDIRECT COSTS		
Labor	1.0	.60
Materials	1.0	.88
UNIT FRONT END COSTS *	1.0	.47

* Money expended on each unit prior to receipt of construction permit.

TABLE 1/2.5-23

RELATIVE COST FACTORS FOR

SUCCESSIVE FOSSIL UNITS IN A 24 UNIT ENERGY PARK

UNIT SIZE	885 MW					1075 MW					1320 MW				
UNIT NUMBER	1	2	3	4	5-8	9	10	11	12	13-16	17	18	19	20	21-24
Direct Costs															
Direct Labor															
Structures	1.0	.88	.85	.8	.77	.95	.88	.85	.8	.77	.95	.88	.85	.8	.77
Env. Prot. & Heat Rejt.	1.0	.91	.85	.8	.77	.95	.9	.83	.77	.77	.95	.9	.83	.77	.77
General Equipment	1.0	.82	.79	.76	.76	.95	.82	.79	.76	.76	.95	.82	.79	.76	.76
Direct Equip. & Mat'l															
Structures	1.0	.91	.86	.82	.8	.98	.91	.86	.82	.8	.98	.91	.86	.82	.8
Env. Prot. Equipment	1.0	.93	.91	.89	.87	.98	.93	.91	.89	.87	.98	.93	.91	.89	.87
General Equipment	1.0	.94	.91	.9	.9	.98	.94	.91	.9	.9	.98	.94	.91	.9	.9
Heat Rej. Material	1.0	.95	.93	.91	.9	.98	.95	.93	.91	.9	.98	.95	.93	.91	.9
Indirect Costs															
Labor	1.0	.75	.65	.6	.6	.92	.75	.65	.6	.6	.92	.75	.65	.6	.6
Materials	1.0	.89	.78	.67	.6	.98	.89	.78	.67	.6	.98	.89	.78	.67	.6
Unit Front End Costs*	1.0	.47	.31	.25	.25	1.0	.47	.31	.25	.25	1.0	.47	.31	.25	.25

*Money expended on each unit prior to receipt of construction permit

TABLE 1/2.5-24

OPERATION AND MAINTENANCE RELATIVE COST FACTORS

FOR SUCCESSIVE UNITS

Type of Site	Unit Number 1	2	3	4	5 - 24
Nuclear					
Dispersed					
Labor	1.0	.8	X	X	X X X
Material	1.0	.95	X	X	X X X
4 Unit Mini Park					
Labor	1.0	.8	.7	.6	X X X
Material	1.0	.95	.93	.9	X X X
20 Unit Park					
Labor	1.0	.8	.7	.6	.5 ↔ .5
Material	1.0	.95	.93	.9 ←	→ .9

	1	2	3	4	5-8	9	10	11	12	13-16	17	18	19	20-24	
Fossil															
Dispersed															
Labor	1.0	.8	X	X	X	X	X	X	X	X	X	X	X	X	
Mat'ls	1.0	.95	X	X	X	X	X	X	X	X	X	X	X	X	
24 Unit Pk.															
Labor	1.0	.8	.7	.6	.5	.95	.8	.7	.6	.5	.95	.8	.7	.6	.5
Mat'ls	1.0	.95	.93	.9	.9	.98	.95	.93	.9	.9	.98	.95	.93	.9	.9

Weighted average labor rates have been calculated for a number of other metropolitan centers in the United States. These weightings are based on the relative percentages of total construction labor contributed by each of the crafts employed.

Using Chicago labor rates as a base of 1.000, equivalent weighted wage rates vary from 0.756 for a metropolitan center in the southeastern United States to 1.054 for a western United States location.

These factors are based on published wage rates in selected metropolitan centers, and may not be applicable to dispersed sites and energy park sites, which will be located at considerable distances from urban population centers.

A tabulation of relative nuclear unit construction labor wage levels for selected cities in the United States follows:

Chicago	1.000
Boston	0.982
Atlanta	0.819
St. Louis	0.980
Houston	0.770
Los Angeles	1.008
New Orleans	0.777

The capital cost estimates for the fossil units are based on WASH 1320's hypothetical Middletown, USA site which is assumed to have average craft wage rates. The variations in wage rates from city to city for fossil units are similar to those shown for nuclear units. References 2 and 7 contains some evaluation of the capital cost variations for building 1000 and 1300MW fossil units in each of 20 cities.

Productivity Differentials - There are important productivity differences among the different geographical areas of the United States with respect to construction labor on nuclear energy units. These are difficult to quantify because:

(a) There are no published data on nuclear plant construction labor productivity based on objective observations or measurements for the various geographical areas of the U.S.

(b) Plant design, as well as applicable code and quality assurance requirements, vary from one plant to another and from year to year. This effectively eliminates the feasibility of side-by-side comparisons of labor requirements for equivalent operations in different geographical areas.

Nevertheless, investigation of the limited data available leads to the conclusion that there probaly are significant differences in the number of manhours required for construction of identical nuclear energy units in different geographical areas.

Using Chicago-area manhour requirements as a base (1.00), it is estimated that construction labor requirements range from a factor of 1.25 in certain mid-Atlantic locations to a factor of 0.95 in selected areas of the Southwest.

There appears to be no direct correlation of wage rate levels and productivity levels. The region with the lowest productivity of those investigated, for example, has a higher wage rate than that prevalent in another region where the productivity appears to be significantly higher. (Wage rates and productivity might normally be expected to vary in direct proportion). Productivity levels can differ significantly even within a geographical area, depending on the labor policies of the employer and the level of other construction activity in the area at the time.

As a result, estimates of nuclear unit construction labor productivity are necessarily approximate and should be applied judiciously.

For fossil units productivity also varies in different geographical regions and with labor policies, etc. It should be recognized that these variations are significant and the capital cost for a new installation at a specific site should be estimated with these factors taken into account.

1/2.5.9 Labor Requirements - Nuclear Unit Construction

Dispersed Sites - The estimated manual labor requirement for construction of the first 1300MW unit of a 2- or 4-unit plant at a dispersed site is 11.1 million manhours. Of this total, 7.5 million manhours are direct labor, and 3.6 million manhours are indirect labor. These estimates do not include such major non-manual labor contributions as engineering and construction management.

The following tabulations summarize the average manual labor manpower requirements, by year, for the 2- and 4-unit plant.

Average Work Force - Two Units At Dispersed Site

Year*	1	2	3	4	5	6	7	8	9
Direct	316	1090	1855	2131	1432	411	26		
Indirect	531	767	582	547	460	294	96		
Total	847	1857	2437	2678	1892	705	122		

Average Work Force - Four Units At A Mini Park

Direct	316	1090	2149	3147	3163	2400	1363	384	23
Indirect	531	767	952	1107	889	700	451	240	84
Total	848	1857	3101	4254	4042	3100	1814	624	107

*year following start of construction on first unit.

Peak work force requirements may exceed the average work force estimate presented in the preceding tabulations by a significant percentage. There are two principal reasons for this difference:

(1) During the build-up phase of the first year, the work force at the end of the year will be substantially greater than the work force early in the year. How rapidly the work force builds up will depend on labor conditions in the area, and the management philosophy of the construction firms. Conversely, the reverse may occur during the final year of construction. Thus, peak work force comparisions are less leaningful than average work force comparisions as measures of actual labor requirements.

(2) A principal objective of construction planning and scheduling is to levelize short-term peaks in manpower demand, and thus reduce the number of construction workers required to accomplish the necessary construction operations. The ratio of peak-to-average work force is then a measure of construction management effectiveness and is likely to vary from project to project.

Energy Parks - As indicated in Section 1/2.5.1 energy park construction based on the modular construction concept results in a significant reduction (31.4%) in direct construction labor for the first unit over the corresponding dispersed site case.

The estimated manual labor requirement for construction of the first unit of a 20-unit nuclear energy park is 8.2 million manhours. Of this total, 5.1 million manhours are direct labor, and 3.1 million manhours are indirect labor. These estimates do not include the labor required for construction of the module-assembly plant, nor do they include non-manual labor required for construction of the nuclear unit itself.

The following tabulation summarizes the average manual labor requirements, by year, for the first four units of the 20-unit nuclear energy park.

	Average Work Force - Four Units At Energy Park*							
Year**	1	2	3	4	5	6	7	8
Direct Module-Assembly Plant Location	198	583	949	997	808	437	74	11
Reactor Location	236	694	1436	1535	1307	862	155	17
Subtotal-Direct	434	1277	2385	2533	2115	1299	229	28
Indirect	445	671	885	1093	865	717	456	55
TOTAL	879	1948	3270	3625	2980	2016	685	83

* Does not include construction of module-assembly plant.
** Year following start of construction on first nuclear unit.

The above tabulation reflects work force requirements for the first four units only at the energy park. This permits direct comparision with the "Average Work Force - Four Units At Dispersed Site" tabulation which appeared previously in this section. In both cases, work will be in progress on four units during the fourth year following the start of construction of the first unit. In the dispersed site case, the expected average work force for this year will be 4254; in the energy park case 3626, a reduction of about 15%.

This reduction in work force is achieved even though the construction schedule for each energy park unit is 16 months shorter than for each dispersed site unit.

In the energy park case, construction of units is initiated at one year intervals commencing 48 months after contract award. After the fourth year, work will be in progress on as many as five units during the fifth and all succeeding years until the twenty-first year.

Based on the 50-month construction schedule and the multiple unit relative cost factors presented in Section 1/2.5.5, the average work force at the energy park is expected to stabilize at 3793 manual construction workers. With the added flexibility made possible by the module assembly plant, the ratio of peak-to-average work force at the energy park should be held to lower levels than at the dispersed site.

1/2.4.10 Labor Requirements Fossil Unit Construction

The available data base for estimating the labor requirements on large fossil units with recent environmental protection additions such as scrubbers is not sufficient to give a detailed breakdown as was done for the nuclear units previously. The labor required for a single unit is in the range of 83 to 87% of that required on the nuclear unit of comparable size so that an order of magnitude approximation would indicate that the levelized work force would reach 3140 to 3300 men when the 1320MW units are under construction on a 48 month construction schedule. In the earlier years of the energy park when the 885 and 1075MW units are under construction the work force would be between 2000 and 2500 men. As in the nuclear case, no labor for building the on-site construction facility was included.

1/2.5.11 Total Labor Requirements

In addition to the construction labor force requirements for each type of energy park, there will be a need for a construction management force, crew of operators, maintenance men and an office staff. Should other industries colocate this would also require another labor force.

In the nuclear energy park additional labor will be required to build the fuel fabrication and reprocessing facilities. The on-site manufacturing facilities will also require construction labor. It is not hard to see that, while not enough details are known on some of these labor requirements at this time, by the time the working community

necessary to support all of this activity and all of the non-working wives and children are counted, a community in the size range of 40 to 60 thousand people could be established. More discussion of the park community development and its potential sociological impacts is found in Task 6.

1/2.6 MODULARIZATION FOR FOSSIL-FUELED ENERGY PARKS

While modular construction techniques have been considered in great detail for the nuclear fueled energy park in this study, Task 4, little consideration has been given to the economic benefits of modular construction that might be possible in a fossil fueled energy park. This section will discuss and try to assess the potential for savings and delineate areas of the fossil fueled units that lend themselves to modularized construction.

It is important that the reader understand the context of the term "module" as used in this section. A module is an assembled system, subsystem, or part of a system or subsystem that is larger than could be shipped to the energy park site by conventional transportation means such as rail shipment. While at some sites it will be possible to ship large parts by barge, it is not logical to assume that every site in the future can be reached by an extension of the country's inland waterway system. The large modules are assembled from smaller parts in an on-site manufacturing facility to be discussed later. Other modules may be merely cast-in-place concrete whose forms are built in the manufacturing facility and poured from the output of an on-site concrete batch plant. The site will be provided with adequate transporters and gantry cranes or pedestal cranes to lift and move the modules to the construction area for erection. Most of the savings associated with modularization is a labor productivity improvement which will be gained by moving much of the direct labor away from the construction site which is subject to the weather and people congestion, and replacing it with higher productivity labor in the on-site manufacturing facility. The result will be a labor savings and an associated construction cycle shortening.

The large size of an energy park and the long construction period will make it economically possible to have very complete on-site pre-fabrication and assembly facilities so that the application of these novel or modular construction techniques can be optimized.

The major requirement to enable this approach to "pay-off" is that a large number of units will be built to exactly the same specifications at the site; in other words, exact duplicates. The fossil-fueled energy park being considered by this study is to contain eight units of each MW rating. No attempt has been made to find the break-even point where the on-site factory approach begins to save money. It is undoubtedly much below the 24-unit, 26,240MW coal fired energy park level. The reader is again referred to Task 4 where lengthy discussion of the current mode of construction for power plants describes the process as basically a custom design for each unit and the advantages for standardized plants built by novel construction methods are expounded.

The following discussion of potential areas of the fossil plant that are suitable for modular construction is divided into three sections which are: the boiler, turbine building, and the balance of plant. Following these sections will be a section on the on-site factory and a discussion section on how the actual cost savings for modular construction was handled in the cost benefit and sensitivity analysis program reported in Task 9.

1/2.6.1 Boiler Modularization

The coal fired units being considered for construction in an energy park, 885 to 1320MW, have boilers that must produce from 6 to 10 million pounds of steam per hour. Boilers of this size are roughly 280 feet in height, 200 feet wide, and over 250 feet long. They are once-through boilers that produce 1000°F steam at 3500psi throttle pressure with one stage of 1000°F reheat. Most of the internals of the boiler consist of tubing which is structurally supported from the top of an external supporting structure. This permits thermal growth to be compensated for near grade level. Figure 1/2.6-1 shows a typical boiler of the type being considered.

Boiler manufacturers currently place emphasis on maximum shop fabrication. The end result being large water-wall panels and header sections, such as the one shown in Figure 1/2.6-2. Other completely assembled components include mixing circuits, assembled flue and duct sections, etc., limited in size only by rail and roadway shipping clearances. In the field, ground fabrication has generally been practiced to a maximum extent.

Smaller boilers are modularized to a much greater extent in the factory. Complete shop assembled boilers up to 500,000 lbs/hr. are currently produced.

For larger units in the 800MW range, 8 heat recovery modules 66' x 10' x 17' weighing 115 tons each are shipped to a site. Windbox and burner modules would also be shipped. There would be 5 modules approximately 50' x 16' x 15' each weighing 83 tons. The headers, coils, burner section and panels are assembled in as big sections as possible before shipment to the site.

Because of the current amount of modularization prevalent in the large boiler industry, duplicate units at the same site, and to a somewhat lesser extent at different sites, afford the advantages of accruing benefits, such as; cost savings for initial equipment, reduced spare parts inventory, construction savings, operator training savings and start-up and adjustment time savings. Reference 8 reporting on a series of 5 boilers purchased by AEP from Foster Wheeler points out the reduction of man-hours for each steam generator due to the construction crew learning. The five units were installed at two sites so the learning was not maximized and the labor productivity at the two sites was not equal. However, the second unit at one site showed a 12% man-hour reduction and the third unit a 24% man-hour saving. At the second site the first unit saved 8% of the labor as compared to the first unit at the first site. The second unit at the second site saved 12% of the man-hours.

It would seem, after reading these facts that large boiler erection did not hold much prospect for further improvement and savings by using larger or super modules assembled on the energy park site. While the additional savings may not be quite as great as those postulated in Task 4 on the construction of nuclear plant components by modularization, Foster-Wheeler Energy Company, the boiler manufacturer consulted for this study, does feel that further significant savings can be attained through using on-site manufacturing facilities. These facilities will employ advanced assembly techniques under ideal handling conditions to assemble modules larger than shipped size using automatic and semi-automatic welding procedures, shop assembled joints, around-the-clock operations, and controlled conditions that minimize weather problems.

This on-site facility would have exceptional material handling capabilities. The facility would include automatic welding equipment, cutting, bending, shearing, rolling, pipe bending, and pipe stress relieving equipment. It

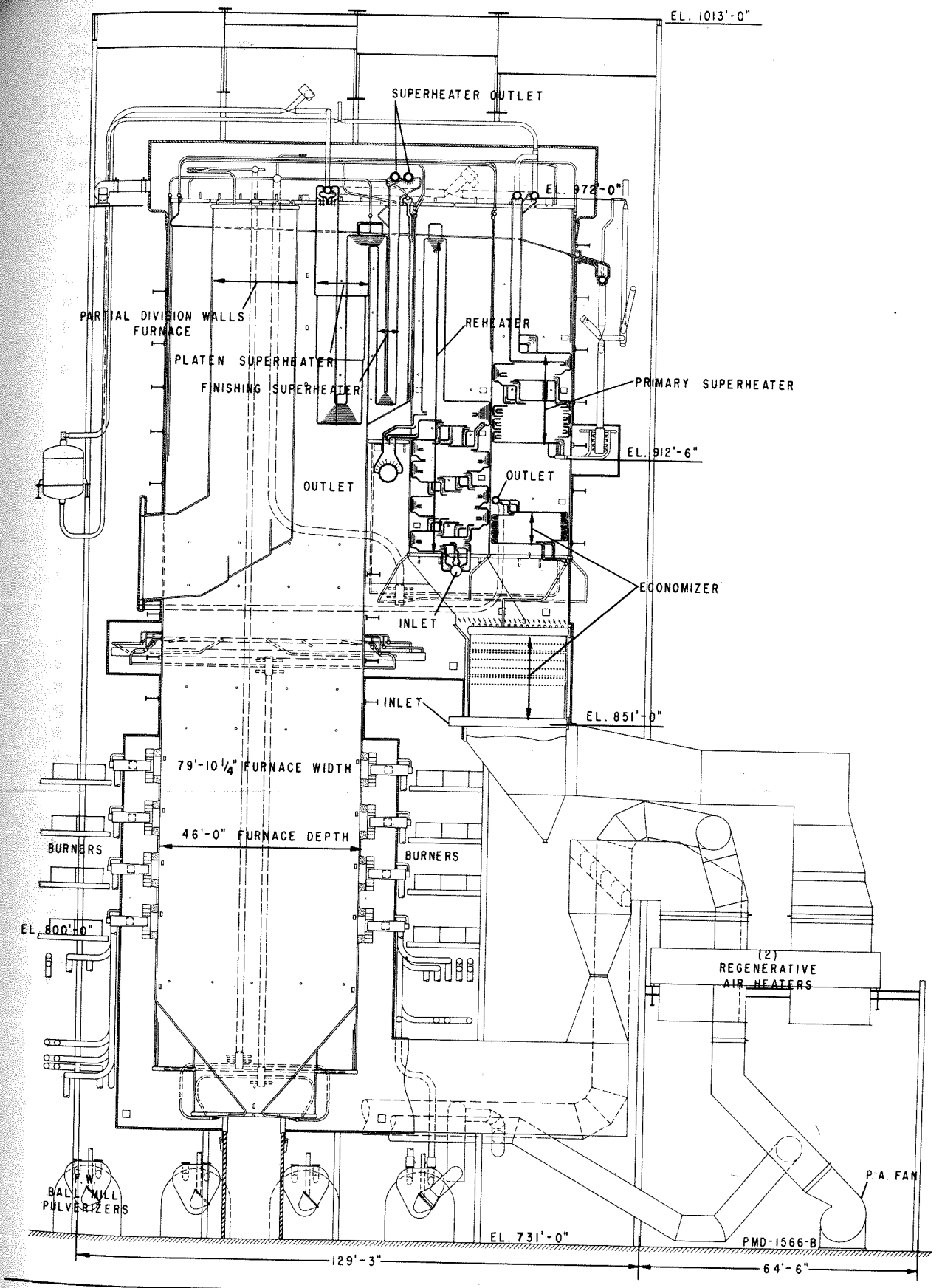

Figure 1/2.6-1 Large Coal Fired Boiler (6,400,000lbs/hr)

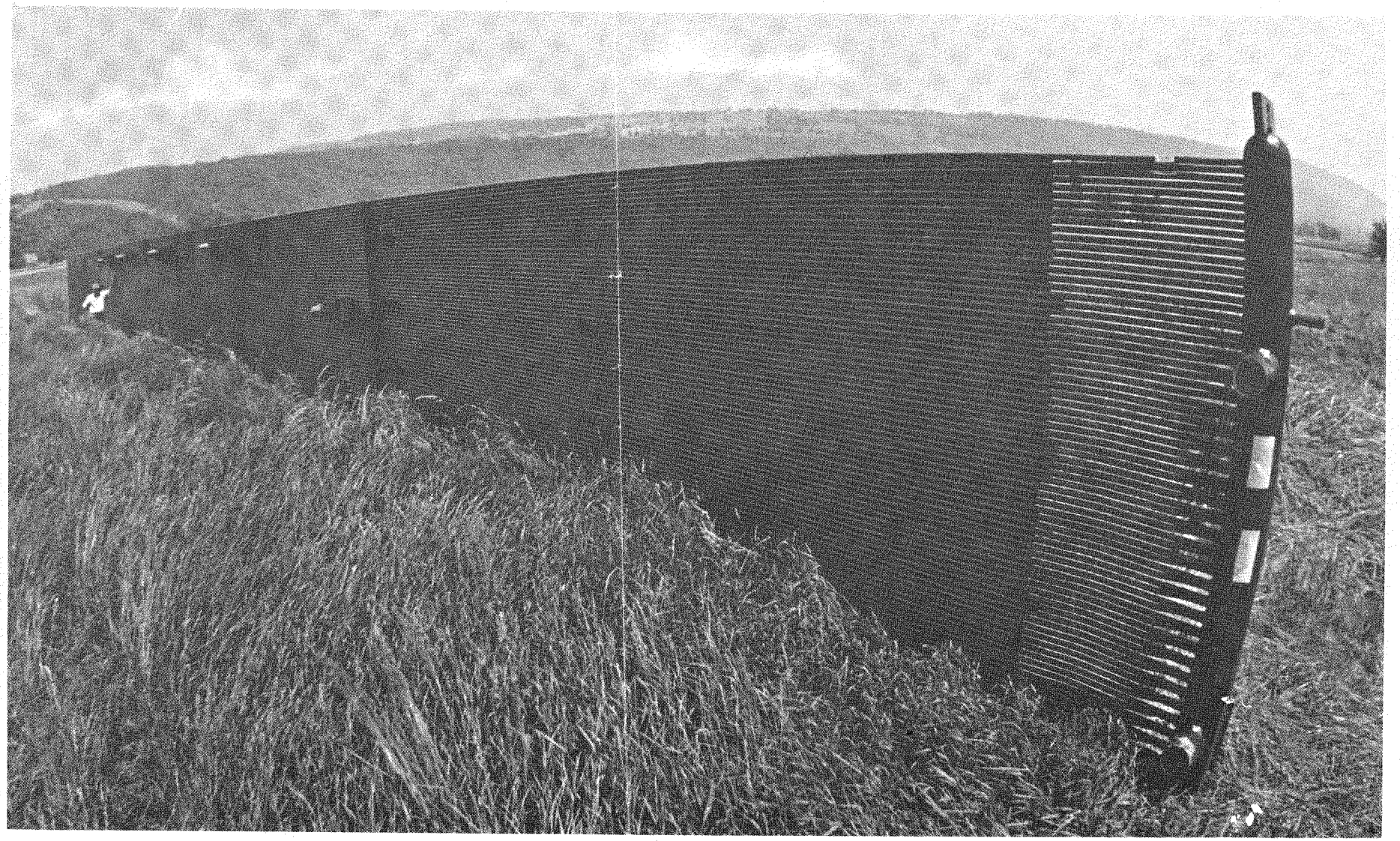

FIGURE 1/2.6-2 108 FOOT SUPERPANEL MADE BY FOSTER WHEELER

would also include a complete machine shop containing the normal items such as power saws, lathes, drills, grinders, and a hand tool crib, etc.

The modules that would be built in such a facility would consist of components of the economizer, primary and secondary superheaters, air preheaters, etc. Further assembly of the windbox and furnace hoppers might also be possible.

In the waterwall area, if super modules larger than that shown in Figure 1/2.6-2 were to be welded together, additional temporary framework would be required to compensate for erection stresses. The size of modules would be limited by weight, working area, opening sizes in the structure and erection stresses.

The plate work on flues and ducts could be done in the on-site factory assembly floor then moved to an outdoor storage area. This would save some of the expense of a covered warehouse area.

Preassembly of submodules to larger modules could be extended to the coal preparation, coal handling, and coal storage equipment also.

The flue gas desulfurization system is usually placed alongside the boiler before the stack. Currently, large scrubbers take almost as many hours to erect as does the steam generator system. While little consideration has been given to the possibility of modularization of the scrubber system, undoubtedly some of the subassemblies, piping systems and ducting will be potential candidates for modularization.

The key to savings through modularization will be to carefully preplan the on-site facility to handle modules which have been predesigned as part of an overall boiler redesign with total modularization in mind and to carefully program the construction sequence to optimize the use of the modules, the facility and the labor force. This concept will hold true in other areas of the plant as well as in the boiler area.

Another concept that can lead to labor savings at the erection site is one of partial temporary covers over the structure once it is in place. This cover would afford partial protection from the elements for the field labor and should increase their productivity. The covers should be economical when considered with their resultant savings especially when they can be used on more than one unit.

An estimate of the labor savings assumed to occur through the removal of field labor and the substitution of higher productivity labor in the on-site factory was made with the help of Foster-Wheeler. The removable cover over the structural steel was assumed to be provided.

Since the on-site factory would be erected prior to construction of the first unit in a park, a direct labor savings will occur on the first unit. It is estimated that the labor multiplier for the eight 885MW units in the energy park will be:

	Unit Number			
	1	2	3	4-8
Labor Multiplier	.8	.74	.70	.67

1.0 refers to a base of approximately one million man-hours which are currently needed to erect the same size boiler by conventional field erection construction techniques.

If the next eight 1075MW units built in the park were from a different supplier, the labor reduction on the first unit of this size would not continue to be 0.67 but would be:

	Unit Number			
	1	2	3	4-8
Labor Multiplier	.74	.7	.67	.67

If the 1075MW size boilers were from the same manufacturer the experienced labor crew could probably erect the first unit at a factor of .7 and the following units at .67.

For the 1075MW units, 1.0 refers to a base of 1,180,000 man-hours required to field erect this boiler by conventional construction techniques. If the next eight 1320MW units built in the energy park were from a different supplier, the labor multiplier would again be:

	Unit Number			
	1	2	3	4-8
Labor Multiplier	.74	.7	.67	.67

For the 1320MW units, 1.0 refers to a base of 1,420,000 man-hours required to field erect the boiler by conventional construction techniques. In addition to these savings attributed directly to the replacement of field labor with factory labor, there will be the labor savings associated with normal learning on repetitive units.

The impact of learning factors on dispersed sites is considered as follows: While there has been a learning assumed for the second unit of a dual unit dispersed site, the third unit on the next dual unit dispersed site starts over again at a factor close to 1.0 because the site is different, the labor force is new and different and the construction management is new and different and all of these contribute to entirely new conditions. Another factor which has not been considered is the wide range in productivities from site to site and geographic region to region that could even cause the first unit at the second dual unit dispersed site to have a labor multiplier greater than 1.0. Geographical variations in capital costs are discussed in Section 1/2.5.

The actual cost savings calculated by the computerized cost-benefit and sensitivity analysis program is reported in Task 9. The method by which the inputs for this program were generated and how the above estimated savings are reflected is documented in 1/2.5 where the learning or multiple unit relative cost factors are enumerated. Section 1/2.6.4 contains a brief discourse on the logic used to arrive at capital costs and learning multipliers for fossil fired units in this study.

1/2.6.2 Turbine Room Modularization

The major cost feature of the turbine building is the turbine generator and its foundation. The construction sequence of this building by conventional means is discussed in 4.11 of this report. Conventionally this building is equipped with a 220 ton overhead crane which is used for moving and placing components in the turbine building. However, the generator stator itself weighs at least 3 times this much and, therefore, requires special rigging. The availability on site of a 1000 ton crane could decidedly alter the approach to erecting the turbine-generator and have a great impact on the design and erection sequence of the building. The C. F. Braun Study which is an appendix to Task 4 looks at the turbine building for a nuclear plant and itemizes each module by weight for the structure of the building. It also lists mechanical, electrical and piping modules that are possible in the turbine building. That list, Table 4-4A does not determine the exact number of modules, module size or details of design as it is not within the scope of this study.

Many of the potential modules for the nuclear steam turbine building would be the same in a fossil fueled steam turbine building such as prefabricated piping for feedwater heaters, feedwater heaters skidmounted, main condenser with tubes, circulating water piping, motor control centers, etc.

In the previous GE study, Reference 5, a discussion of the turbine generator island arrangement to determine its most favorable arrangement in order to take advantage of the major station crane and to assure compatability and coordination during the construction process was made. The ultimate arrangement of the plant must avoid hazardous lift movements that would interfere with construction of plants in process or plants completed and in operation. The modular concept was assumed for all major components including the turbine-generator foundation.

1/2.6.2.1 TURBINE-GENERATOR MODULES. The following description of the modular approach for turbine-generator modules is repeated from Reference 5 for completeness.

> Starting with the largest assembled component available from the Large Steam Turbine-Generator shops, an assembly area at the manufacturing site in the energy park can be arranged for erecting the turbine and generator major sections as complete modules. This erection work on the modules can be processed in this separate assembly area adjoining the final site while the foundations and other structures in the turbine area are being constructed. At completion of the module assembly each would be loaded onto suitable moving devices and placed in its final position by the large gantry crane. The sequence is illustrated on the assembly drawing Figure 1/2.9-3.
>
> To permit the erection and handling of these larger assembled turbine-generator modules without causing deformation and to assure mechanical stability of the components, provisions must be made in the structural design of the components and the lifting apparatus. This aspect had been reviewed with the Steam Turbine Department to determine the potential of this approach to turbine-generator erection. There are various devices available in the industry that can be utilized in the handling and positioning of the completely assembled turbine-generator components to permit the control and fine line-up accuracy required. To review the feasiblity of this

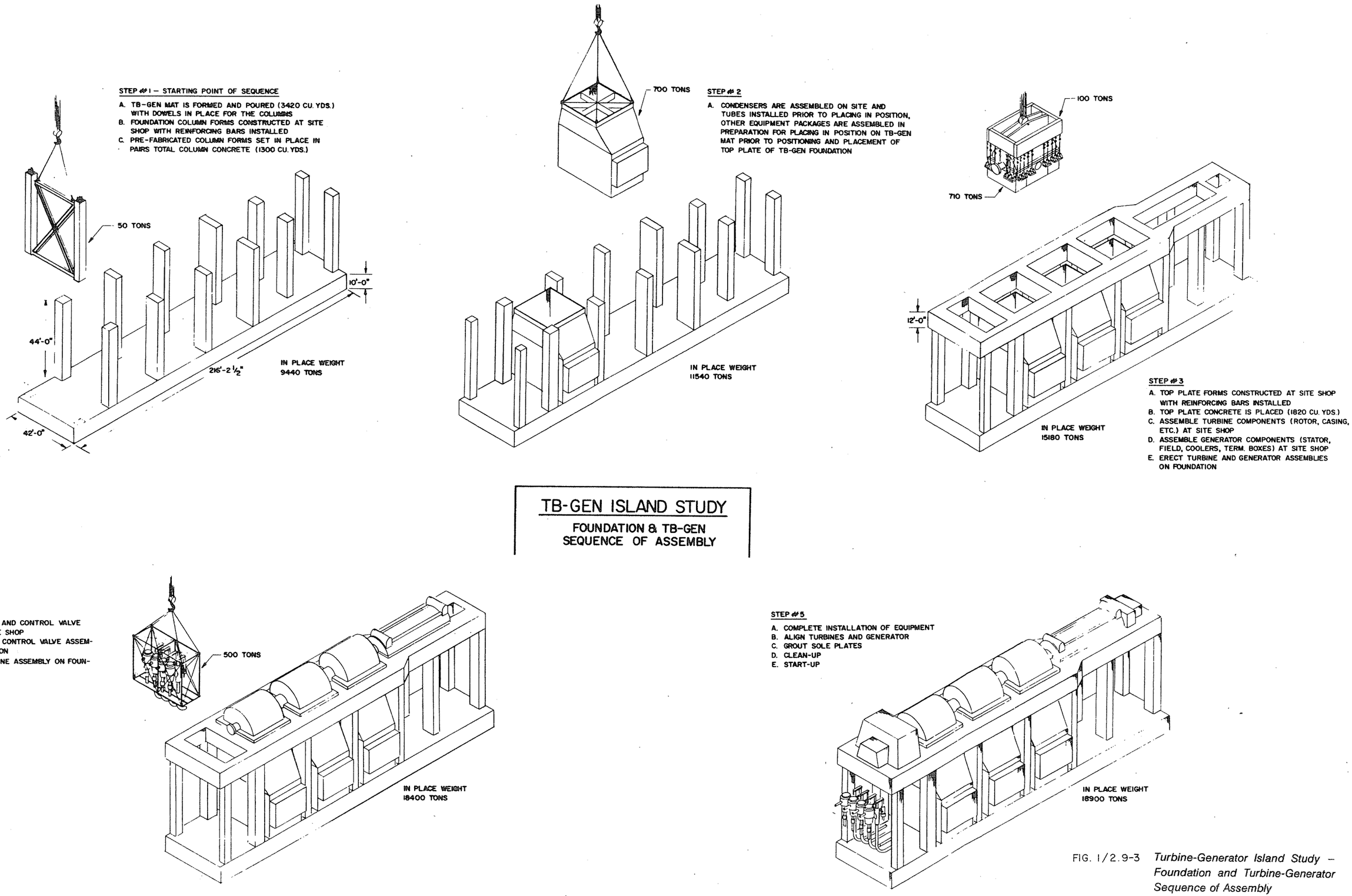

FIG. 1/2.9-3 *Turbine-Generator Island Study – Foundation and Turbine-Generator Sequence of Assembly*

TURBINE-GENERATOR ISLAND

L.P. TURBINE LIFTING CONCEPT

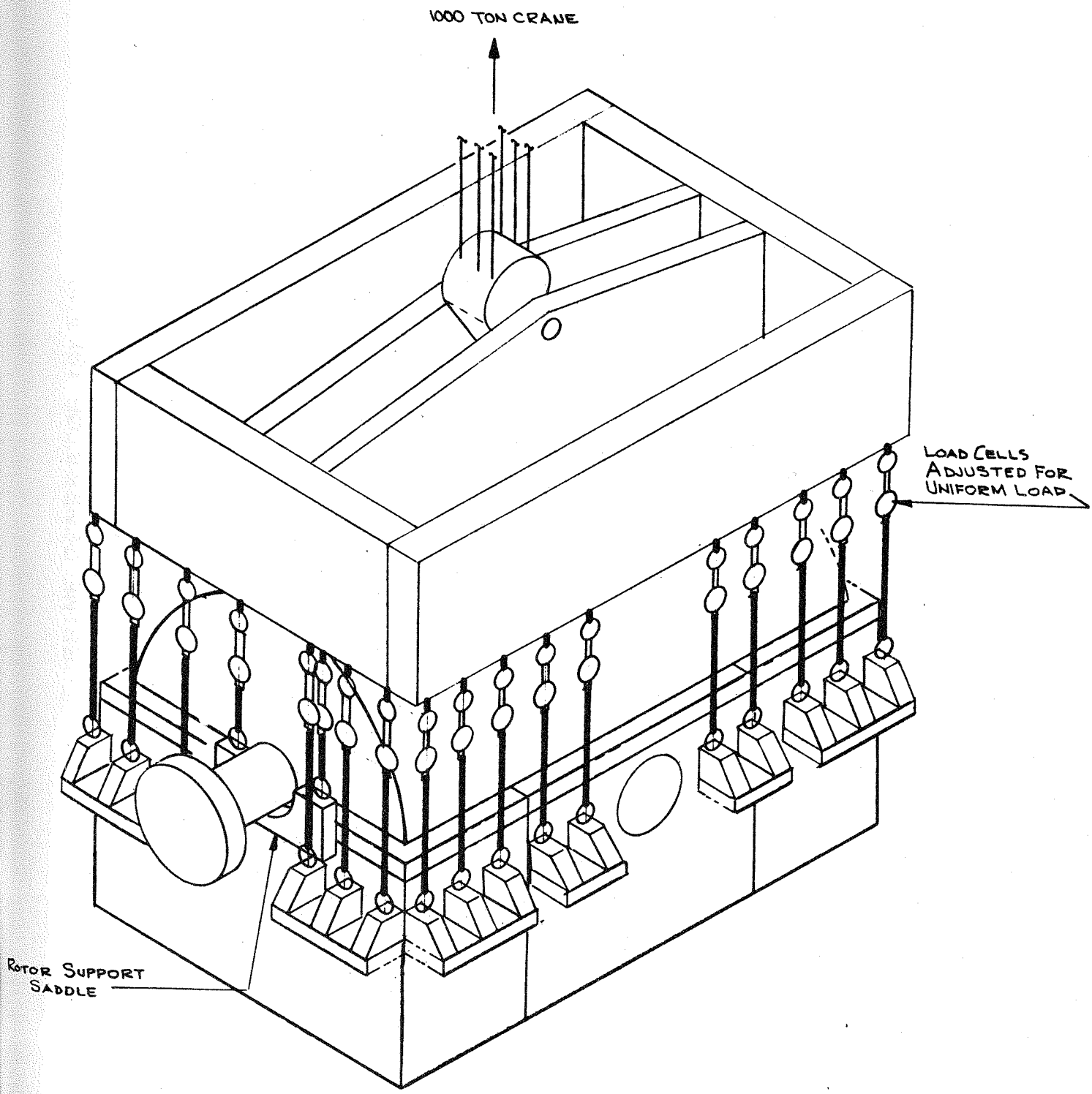

B.W. WILKINS
7/13/73

concept, a preliminary study was undertaken with Steam Turbine Engineering to determine how to add the required structural members and handling devices to permit this degree of modularization. See Figure 1/2.9-4 for the concept. The value of the time saved and the quality improvement anticipated must be compared with the added expenditures for the fixtures and handling devices.

The tools and fixtures considered for this work are the type that would be used in a manufacturing area and which are suitable for accommodating physical variations in components. Complete planning and procedures would be provided to assure the high degree of tolerance control and line-up necessary for accuracy that assures fully reliable service. Training programs would be established to give the assembly and test personnel the opportunity to become skilled and competent in this new method of turbine-generator erection.

Another innovation is shown on Figure 1/2.9-5 where the electrical generator is completely assembled in the same shop, but on a special base outfitted with air cushion devices. After assembly and pre-test the entire assembly is moved to the large gantry crane utilizing the air cushion principle. Employment of this device simplifies and speeds up the total assembly process and assures safe and easy movement of this very large module.

Figure 1/2.9-6 demonstrates a novel approach to the construction of the turbine-generator foundation using the modular concept for the mechanical and electrical modules. The turbine-generator foundation has been conceived as a reinforced concrete structure consisting of a base mat, columns, and an upper plate. The major innovation in this concept is that the module forms (mat, column, and upper plate) will be constructed in a steel fabricating shop. The forms will consist of corrugated metal sheets attached to a steel framework. The steel framework will be designed to accept the weight of the form when it is being moved to the site. After the forms are built, reinforcing steel and embedded steel inserts will be located and installed in the forms in the shop. After the mat modules are constructed, they will be moved to the site and filled with concrete. Approximately 3420 cubic yards of concrete are required for the mat.

TURBINE-GENERATOR ISLAND

ELECTRICAL GENERATOR ASSEMBLY

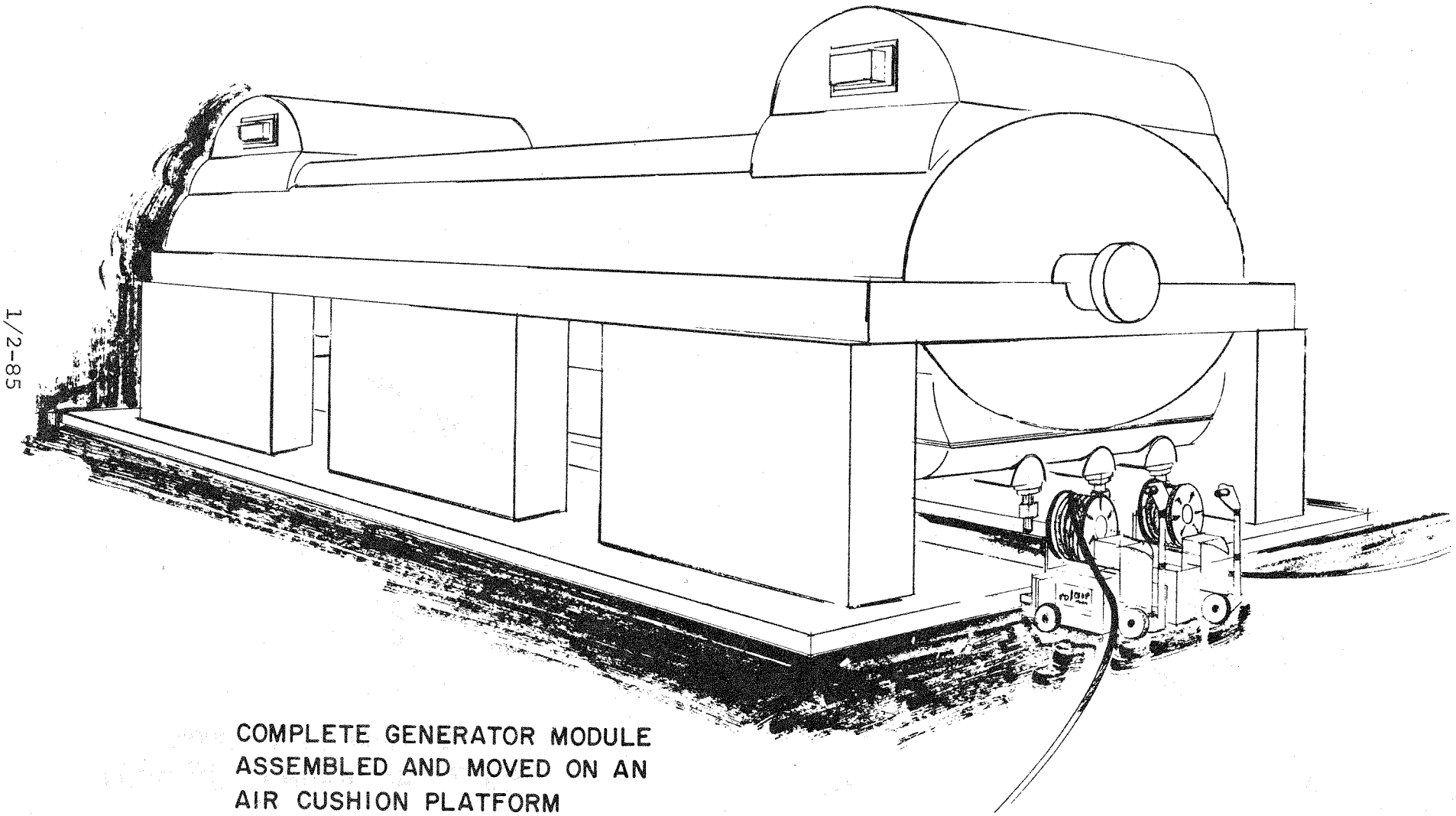

COMPLETE GENERATOR MODULE
ASSEMBLED AND MOVED ON AN
AIR CUSHION PLATFORM

TURBINE-GENERATOR ISLAND
MODULAR FOUNDATION

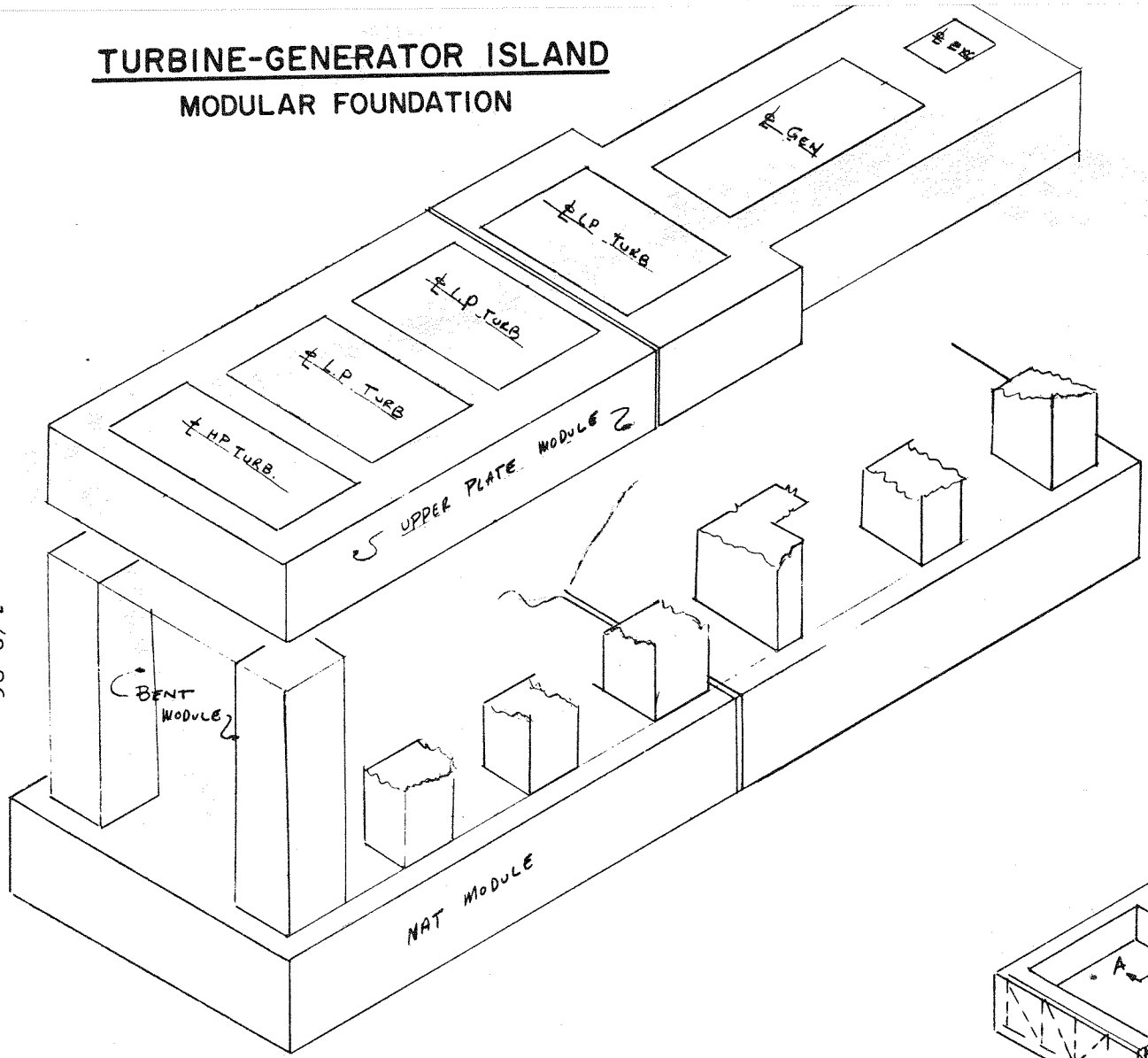

TURBINE GENERATOR FOUNDATION
SECTIONED

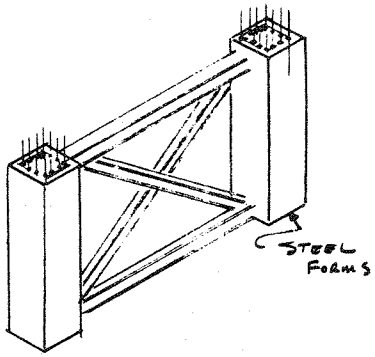

BENT MODULE
TYPICAL

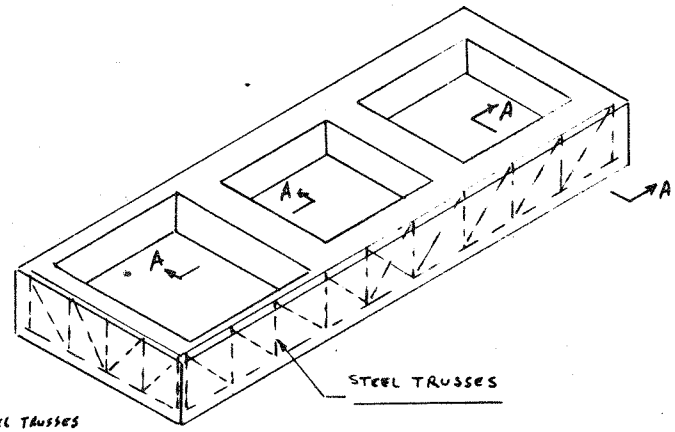

UPPER PLATE FORMING & TRUSSWORK
TYPICAL

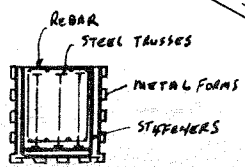

SECTION A-A
TYPICAL

FIG. 1/2.-6

The next step is to install the column modules on the mat and anchor them down to steel inserts in the top of the mat. Approximately 1300 cubic yards of concrete are required for the columns.

The third and last step in the construction of the turbine-generator foundation is to set the upper plate modules onto the columns. These modules have steel trusses set within the forms which will span between column bents. The trusses are designed to carry the weight of the concrete so that no additional shoring is required after the forms are set. The forms are anchored to steel inserts placed on top of the columns. Approximately 1820 cubic yards of concrete are required for the upper plate.

1/2.6.2.2 ASSESSMENT OF LABOR SAVINGS IN TURBINE BUILDING MODULARIZATION. The C.F. Braun Study, Task 4 appendix, lists the turbine building as having a division of work as follows:

	Module Fabrication Percentage	Site Work Percentage
Civil/Structural	60	40
Mechanical/Piping	40	60
Electrical	10	90

Based on a productivity factor of 1.0 for conventional construction (field erection) the Braun Study assumes a productivity factor increase for module fabrication as follows:

Type of Work	Productivity Factor	Labor Multiplier
Civil/Structural	4.0	.25
Mechanical/Piping	2.0	.50
Electrical	1.5	.67

If these increases in productivity are assumed and a labor allocation in these three categories is made, the labor savings for the turbine building would be on the order of 35 percent for civil and structural, 20 percent on mechanical and piping and 4 percent on electrical work. This would result in an overall labor savings on the first unit's turbine building on the order of 23 percent. Learning would occur on the successive units. This resultant savings is very similar in magnitude to the savings estimated for the boiler erection. Section 1/2.6.5 will discuss the logic used to establish costs and multiple unit savings factors for fossil fired units being built in an energy park.

1/2.6.3 Balance of Plant Modularization

In addition to the turbine-generator and boiler areas there are undoubtedly other parts of the fossil-fueled power plant which are amenable to being modularized in the on-site assembly facility. These additional modules would be identified during the detailed planning and design phase of a large energy park.

At this time the construction sequence and methods for modularization would be carefully designed to take every advantage of the modular approach. No extreme changes would be made in the components that are supplied by equipment manufacturers.

Some of the remaining plant areas that might afford labor savings through modularization include:

- Coal handling and conveying equipment
- Cooling water intake and discharge structures
- Control/stop valve module
- Control room components and panels
- Waste-Water treatment equipment(skid mounted)
- Piping systems including hangers and restraints preassembled
- Environmental protection equipment sub-systems
- Electrical equipment packages

1/2.6.4 On-Site Fabrication Facility Assumptions

The on-site manufacturing facility for assembling and pre-fabricating modules in the case of fossil fueled units is not as elaborate as the facility needed for nuclear plants where larger concrete modules with heavier reinforcing is required.

The facilities described previously for the boiler erection are estimated to require in the neighborhood of $2,000,000 with all equipment installed. The needed floor space and special pad for erecting the turbine modules may be on the order of $1,000,000. An on-site warehousing facility would be approximately 180,000 ft. and cost $1,800,000. If a heavy lift pedestal crane is used the crane and its rail craneways would cost about $5,000,000. If the 1,000 ton gantry crane is installed in the fossil park this might cost on the order of $19,000,000 including craneways. The data input to the cost benefit-sensitivity analysis computer included only $9,800,000 for the limited on-site manufacturing facilities and pedestal crane. This estimate is much lower than the very complete facility estimated for the nuclear park. With the addition of a gantry crane and craneways, a concrete batching plant, site preparation and

other miscellaneous features, the on-site factory for the fossil park might be as much as 30 to 35 million dollars. This amount would not significantly alter the comparision between energy parks and dispersed sites where the amounts over the park life are many billions of dollars.

The on-site factory and the cranes in the fossil park may be relocated several times during the construction life of the park. This will permit construction with minimum interference from partially completed and operating units. No money was included in the fossil case to pay for these moves because the level of detail studied for the on-site facility did not merit this. In the nuclear energy park section, Task 4, the on-site factory was relocated twice at a cost of $21,500,000 per move. The level of detail considered for the on-site factory in the nuclear park was enough to enable such an estimate to be made, (see Section 4.11).

1/2.6.5 Cost Savings From Modularization - Fossil Plants

The estimated cost savings of fossil-fueled units constructed in a large energy park due to modularization is handled in a similar fashion to the nuclear units in a 20-unit nuclear park as discussed in 1/2.5 and Task 4.

First, the capital costs for the three fossil fired unit sizes at dual unit dispersed sites were established for comparison. These costs were based on the assumption that the units are to be constructed by conventional construction techniques at dispersed sites in a 51 month time span from construction permit to commercial operation.

Next, a conservative estimate of direct labor and time savings due to modularization was made which reduced the construction cycle by three months for all the park units and the direct labor by 4% on the first 885MW unit which is built in the park. Reductions of 8 and 12% of the direct labor on the first 1075MW and 1320MW units respectively, which follow later in the park construction sequence were assumed. These later units were thought to be able to benefit more heavily from experience and their designs would be more mature and better adapted to the use of novel and modular construction techniques.

The capital costs of the first 885MW, first 1075MW, and first 1320MW units for park construction were reduced

by the amount of this direct labor savings discussed above. These costs were allocated over the 48 month construction cycle for park construction. The park units are assumed to come on-line one year apart.

On top of this first unit capital cost reduction for energy park construction, further reduction through labor learning factors, material savings through "multiple buy" purchasing and better utilization of the material at the site is estimated for successive units of each size. These savings are handled by the multiple unit factors which are reported in Section 1/2.5. As was noted before, this general approach was used for both fossil and nuclear units.

If fossil units were completely adapted for modularization, and construction sequences were optimized, the direct labor savings on the "first of a size" unit would probably be reduced even more than was assumed for this study.

If a significantly larger reduction in capital cost is assumed for the first unit due to direct labor savings, then the savings on successive units will be much less than assumed in Section 1/2.5 for fossil units through the multiple unit relative cost factors. The construction cycle time savings might also be more on the order of 6 to 9 months in an optimally constructed fossil energy park.

The construction of the first fossil energy park will benefit, but following parks will benefit even more because modularization techniques will improve with experience and optimization of their use.

1/2.7 ENVIRONMENTAL CONSIDERATIONS FOR FOSSIL DISPERSED SITES AND PARKS

The emphasis of this section is on environmental considerations associated with emissions from coal-fired electric generating units. Coal smoke is a complex mixture of sulfur dioxide (SO_2), particulates, nitrogen oxides and other ingredients. Widespread installation of electrostatic precipitators has brought particulate pollution largely under control. Although the control technology is available, sulfur dioxide emissions are currently the subject of much controversy, i.e. scrubbers or fuel desulfurization versus tall stacks with intermittent controls. In this study, the assumption was made that all new plants, energy parks included, would be required to meet EPA's stringent "new source performance standards"; i.e. scrubbers would be used.

Even though the use of scrubbers was assumed, a number of questions concerning large coal-fired energy parks remained. The analysis presented in subsection 1/2.7.1 was performed to determine environmental constraints on park size and/or operation. Costs and land requirements associated with flue gas desulfurization and sludge handling are identified in subsection 1/2.7.2. Other environmental protection areas, including noise abatement, particulate removal, waste water treatment and aesthetics are discussed in subsection 1/2.7.3. The final subsection is a collection of appendices detailing the analysis performed to identify environmental constraints on coal-fired energy parks.

1/2.7.1 ENVIRONMENTAL STANDARDS & CONSTRAINTS FOR FOSSIL PARKS

1/2.7.1.1 INTRODUCTION/OBJECTIVES. An obviously important subtask in the characterization of energy parks is the determination of total environmental releases associated with parks. The relationship between these releases and environmental standards could introduce constraints on park size, design and/or operation. This subsection is devoted solely to the analysis of environmental releases from fossil parks. Environmental considerations for nuclear energy parks are discussed in Task 4.

The primary objective of the fossil energy park environmental analysis was to determine if environmental regulations, particularly ambient air quality, introduce significant constraints on park size and/or configuration. A typical initial reaction to a large coal-fired energy park

is that ground level concentrations of SO_2 will never meet EPA standards. It is recognized that in many areas of the United States, the no significant deterioration guideline will rule out any type of fossil generation, 2000 MW plants or 20,000 MW parks. Throughout the environmental analysis, the emphasis of the analytical work was on comparative performance of fossil energy parks and typical power plant installations.

1/2.7.1.2 ANALYSIS APPROACH

Introduction. The purpose of this section is to summarize the analysis approach used to compare fossil energy parks and dispersed power plants in terms of their impact on ambient air quality. Throughout the analysis, emphasis was placed on the identification of significant constraints on park design/operation introduced by environmental regulations. The overall analysis approach is illustrated in Figure 1/2.7-1 and summarized below. Detailed discussions of the analysis approach are presented as appendices in Section 1/2.7.4.

Environmental Standards. The initial analysis effort was devoted to a review of existing environmental standards. Basically two types of standards are applicable to fossil energy parks.

- National Ambient Air Quality Standards
- National Emission Standards

The national ambient air quality standards were established in April, 1971 by the Environmental Protection Agency (EPA). Although national standards were established, each state is required to develop its own state implementation plan showing, in detail, how and when they will achieve standards as high or low as they choose, so long as they satisfy the EPA national standards. Although some states have established regulations which require air even cleaner than the national standards, the analysis throughout this study is based on EPA's national standards. Consideration of site specific variations in environmental standards was considered beyond the scope of the study. Additional background information concerning environmental standards and discussion of the specific standards are presented in Section 1/2.7.4.1.

In spite of all the publicity concerning disagreements between EPA and electric utilities with regard to environmental standards, a brief summary of the present situation may be worthwhile. EPA is presently in the process of

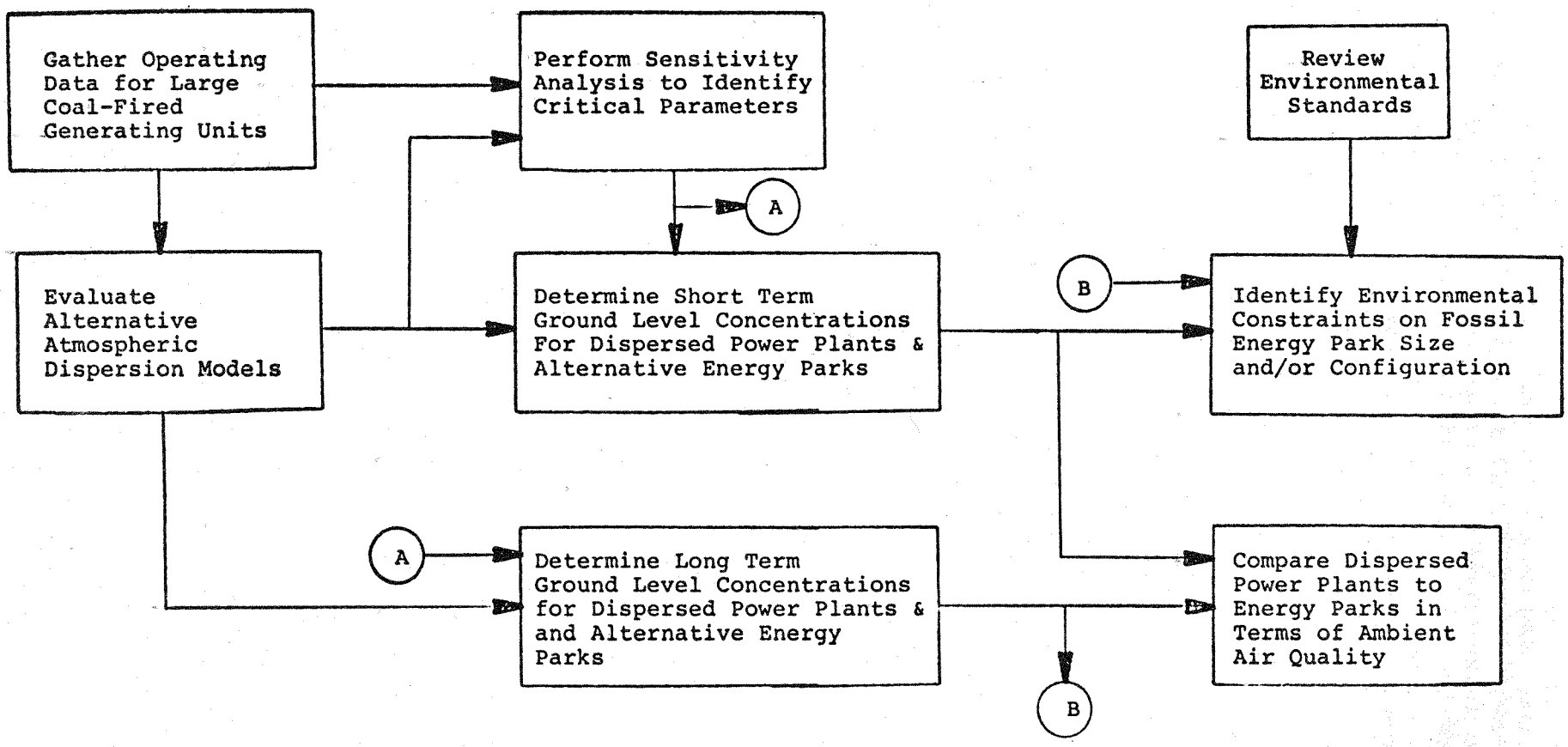

FIGURE 1/2.7-1

FOSSIL ENERGY PARKS ENVIRONMENTAL ANALYSIS APPROACH

extending the original 1975 compliance deadline for some standards to 1980 or possibly 1985. It appears that EPA has recognized tall stacks and intermittent supplementary control systems as interim solutions to the SO_2 problem with scrubbers or fuel desulfurization the only recognized long term solution. In view of this stance, the fossil energy park analysis is based on the assumption that scrubbers will be used in both the energy park and dispersed plant configurations.

Literature Review and Data Collection. The second step in the analysis was to conduct a literature review and data collection effort to consolidate information related to the design and operation of large coal-burning power plants. Particular emphasis was placed on identifying large complexes of coal-burning plants which could be viewed as small energy parks. It was assumed that information concerning the design and operation of such complexes would be helpful in the analysis of large fossil parks. One of the basic questions at the start of the analysis effort concerned the impact of multiple emission sources in a relatively small area. During the literature review and data collection effort, attention was focused on the multiple source question to identify mathematical models and metered data applicable to energy park analysis.

The following sources of information were identified:

- Tennessee Valley Authority - Air Quality Branch
- EPA - Meteorology Laboratory, National Environmental Research Center
- Department of Commerce - National Oceanic and Atmospheric Administration
- American Electric Power Co., Inc.
- Large Power Plant Effluent Study (LAPPES)

Rather than present detailed information at this point, we will simple indicate that the data fell into three (3) categories:

- Metered ambient air quality data
- Plant Design and operation data
- Mathematical models

Metered ambient air quality data were used to investigate the validity of mathematical dispersion models. Plant design and operation data were used to established a typical range of values for various design parameters (stack height, stack diameter, exhaust temperature, velocity, etc.). This information was then utilized in conducting the sensitivity analysis discussed later.

Alternative Atmospheric Dispersion Models. Based on the resources available to conduct the fossil energy park environmental analysis, mathematical models were used to investigate emission behavior and plume dispersion. It is recognized that additional analysis such as wind tunnel testing is required to adequately answer many of the questions raised by the energy park concept. This is particularly true of some of the site specific questions. For example, what is the impact of local terrain on ambient air quality?

During the literature review and data gathering effort, a number of mathematical dispersion models were identified. Comprehensive studies conducted by TVA since 1951 indicate that plume dispersion is most easily described and modeled if two aspects of plume behavior are treated separately.

- Plume rise due to buoyancy and initial vertical momentum.
- Plume diffusion after plume rise due to turbulence in the air.

A detailed discussion of alternative plume rise and plume diffusion models is presented in Section 1/2.7.4.2. Also included is a comparison of model predictions with metered data. Based on the evaluation of mathematical models presented in Section 1/2.7.4.2, the decision was made to utilize two computer simulation models recommended by EPA and available through their UNAMAP (User's Network for Applied Modeling of Air Pollution) service. Two models are necessary because the national ambient air quality standards are specified in terms of short term averages (1, 3, and 24 hours) and long term averages (annual). EPA's PTMTP program is an interactive program which computes, at multiple receptors, short term concentrations resulting from multiple sources. The PTMTP program is basically a hybrid dispersion model combining the features of the Gaussian coning model and trapping model discussed in Section 1/2.7.4.2. EPA's Climatological Dispersion Model (CDM) is a remote batch program which determines long term (seasonal or annual) pollutant concentrations at any ground level receptor using average emission rates from multiple point and area sources and wind rose data. A wind rose is simply a joint frequency distribution of wind direction, wind speed, and stability for a specified period of time, usually a season or year.

Sensitivity Analysis to Identify Critical Parameters The overall purpose of the sensitivity analysis was to identify critical parameters and to establish a base case for the analysis of short term and long term concentrations.

The principal determinants of ground level concentrations are:

- Stability class
- Wind speed
- Mixing height
- Exhaust gas temperature
- Exhaust volume flow
- Stack height

The sensitivity of short term concentration levels to these input parameters was investigated by considering a typical dispersed power plant with two generating units. The largest of the three fossil units considered in this study (rated capacity = 1320 MW) was used to conduct the sensitivity analysis. Emissions from each generating unit were assumed to be equal to the national emission standard (1.2 lbs of SO_2 per million BTU's input). The sensitivity analysis was conducted by observing variations of maximum 15 minute average ground level concentration of SO_2 (as determined by EPA's PTMTP dispersion model) associated with variations of the input parameters. In addition to considering independent variations of the input variables the impact of multiple variations of input variables was also investigated.

The sensitivity analysis is described in detail in Section 1/2.7.4.3. Based on the analysis, the following baseline generating unit characteristics were established:

Rated Capacity = 1320 MW
Heat Rate = 8970 BTU/KWH
Stack height = 800 ft (244m)
Stack diameter = 37 ft (11.3m)
Exhaust velocity = 46.5 ft/sec (14.2 m/sec)
Exhaust temperature = 250 ^{o}F (394 ^{o}K)

Since wind speed and stability class were found to be such critical determinants of ground level concentrations, the decision was made to consider them parametrically throughout the analysis.

Analysis of Short Term Concentrations. The overall purpose of the energy park environmental analysis is to determine environmental constraints on park size and/or configuration. Since emission standards are specified on a generating unit basis, they introduce no additional constraints on park design. Emission standards were designed by EPA to require application of the best available control technology considering the cost of new facilities. Accord-

ingly, an assumption made in this study was that emission control equipment (scrubbers, precipitators, etc.) would be used on both park and dispersed generating units. Throughout most of the analysis it was also assumed that emissions from each generating unit just satisfied emission standards. Unlike emission standards, ambient air quality standards have the potential for introducing constraints on park design. One of the objectives of the analysis of short term concentrations was to identify these constraints by comparing maximum combined concentrations from the park's multiple sources to ambient air quality standards. Another objective of the short term analysis was to compare ground level concentrations in the vicinity of an energy park to concentrations in the vicinity of a typical two unit power plant.

One of the important considerations in the analysis of short term concentrations was park configuration or layout. It is intuitively obvious that as the distances between sources approach zero, it is possible to treat the park as a single source with an emission equal to the sum of emissions. As distances between sources become very large the plumes retain their individual concentration patterns and, due to dispersion, the additive effect is insignificant. Unfortunately, energy park configurations fall somewhere between these two extremes where a rather sophisticated multi-source dispersion model is required. EPA's PTMTP Program was used to conduct the analysis of short term concentrations. In order to assess the impact of unit spacing, two park configurations were considered in the analysis. The first configuration, termed the basic energy park, consisted of 24 units within a .84 sq. mile area. The second configuration, the spread out park, consisted of 24 units within a 36 sq. mile area. Since the PTMTP program is based on the assumption of no plume interactions, additional analysis was performed to quantify the benefits of plume interaction which frequently result in increased plume buoyancy and decreased ground level concentrations.

Most of the analysis of short term concentrations was not site specific, in that ground level concentrations were calculated for a variety of meteorological conditions. However, in order to develop a realistic estimate of the amount of time that ambient air quality standards might be exceeded, it was necessary to use specific meteorological data. Wind rose data for Rochester, New York was used. Analysis of wind rose data for several areas indicated that the Rochester data was fairly typical. The analysis of short term concentrations is discussed in detail in Section 1/2.7.4.4.

Analysis of Long Term Concentrations. The analysis of long term concentrations was similar to the short term analysis in that emphasis was placed on identifying constraints on park size and comparing fossil park emissions to dispersed plant emissions. Long term concentrations are defined as annual averages since EPA's long term ambient air quality standards are expressed in terms of annual averages (primary standard = 80 $\mu g/m^3$, secondary standard = 60 $\mu g/m^3$). EPA's Climatological Dispersion Model (CDM) was used to calculate annual average ground level concentrations for several energy park and dispersed plant configurations. The CDM computer program calculates ground level concentrations at specified receptors for all combinations of wind speed and stability class. Average annual concentrations are then estimated using a weighted average approach based on wind rose data.

The sensitivity of long term concentrations to meteorological data was evaluated by considering two widely different wind roses in the analysis: a uniform wind rose and a wind rose for Rochester, New York. Although the Rochester wind rose is site specific it is typical of actual wind roses investigated during the study. The specific cases investigated during the analysis of long term concentrations were:

- Typical plant (2 identical 1320 MW coal units)
- Basic energy park (24 units within a .84 sq. mile area)
- Spread out park (24 units within a 36 sq. mile area)
- Dispersed siting (24 units within a 2025 sq. mile area)

The analysis of long term concentrations is discussed in detail in Section 1/2.7.4.5.

1/2.7.1.3 ASSUMPTIONS. The purpose of this section is to briefly summarize the many assumptions made during the environmental analysis of coal-fired energy parks. Many of the assumptions mentioned in this section are discussed in greater detail in Section 1/2.7.4.

As previously indicated, EPA's computerized models available through their UNAMAP service were used to perform much of the environmental analysis. Some of the more important assumptions made during the theoretical development of the EPA models are:

- Effluent is emitted from the source continously and uniformly.

- None of the material emitted is removed from the plume as it moves downwind and there is complete reflection at the earth's surface; i.e., no deposition or reaction occurs at the surface.
- If no stable inversion layer exists, the plume spread has a Gaussian distribution in both the horizontal and vertical planes.
- Effluent is dispersed over relatively flat terrain with no significant interference from topographical features.
- Standard deviations of plume concentration distribution (σ_y and σ_z) are based on sampling times of about 15 minutes.

One of the critical steps in the analysis was the conversion of 15 minute average concentrations to 3 hour and 24 hour concentrations. Concentrations directly downwind from a source decrease with sampling time mainly because of larger σ_y due to increased meander of wind direction. The σ_y and σ_z parameters used in the basic EPA models were based on 15 minute sampling times. Correction factors for larger sampling times recommended by TVA and EPA and those experienced during utility field tests vary widely (by as much as a factor of 4). The correction factors recommended by EPA were used in this analysis since they were the most conservative.

Another critical step in the analysis was the development of probability distribution functions which indicate the frequency of occurrence of various short term concentration levels. One of the assumptions made in using wind rose data to determine frequency of occurrence of various concentration levels was that the wind was always blowing in the direction which gave rise to the highest concentrations for the park configuration under consideration. This worst case approach tends to over-estimate concentration levels. Preliminary analysis indicates that the over-estimation is in the 20% to 30% range.

The basic energy park considered during the environmental analysis consisted of 12 point sources with each point source representing a pair of generating units (2-1320 MW units). The pair of generating units represents a typical dispersed generation site. As previously discussed, the actual fossil park configuration consists of three sets of eight units (8 units @ 885 MW, 8 units @ 1075 MW and 8 units @ 1320 MW).

Assuming that all units in a park just meet national emission standards, the actual park will produce less SO_2 than the park consisting of 24 units @ 1320 MW. However, it

is not true that ground level concentrations from the smaller generating units will be proportionately less than those from the large units. The reason for this is that because of reduced gas flow, plume rise is reduced and ground level concentrations are increased. The effects of reduced emissions and reduced plume rise tend to cancel each other so that within the accuracy of the models used, concentrations in the vicinity of the 24-1320 MW unit park are approximately equal to those in the vicinity of the actual park. If anything, the resultant ground level concentrations found using the larger units exclusively should be slightly higher than what would occur with a mix of larger and smaller units.

Basically two park configurations were considered in the analysis, a concentrated park and a spread out park. No optimization of configuration was performed to minimize ground level concentrations. One of the problems is that advantages can be identified with both dispersed stacks and concentrated groups of stacks. For example, stacks from two or more units could be combined to increase effective mass and heat efflux, obtaining greater plume rise and reducing ground level concentrations. If all emissions are trapped below an inversion layer, however, combined stacks may have negligible impact. In some cases, the buoyant energy from combined stacks may be sufficient to punch through inversion layers resulting in very widespread dispersion. In other cases, penetration will not occur and the combined plume will be trapped. In these situations where trapping occurs, distributed stacks might be more desirable. Although the benefits of combined stacks or closely located stacks were evaluated, most of the environmental analysis assumed individual stacks for each generating unit.

In conducting the analysis, no consideration was given to the use of intermittent supplementary controls such as the use of low sulfur coal, part load operation, re-dispatching, etc. Intermittent controls are an attractive approach for both parks and dispersed sites because ambient concentrations are excessive only occasionally. Analysis of intermittent controls is recommended for any follow-on studies of fossil energy parks.

1/2.7.1.4 SUMMARY OF RESULTS AND CONCLUSIONS. There are two basic sets of air standards applicable to fossil parks:

- National emission standards
- National ambient air quality standards

National emission standards applicable to fossil fuel-fired generators are designed to require application of the best

available technology considering the cost of new facilities. Since emission standards are specified on a generating unit basis, they introduce no additional constraints on park design as compared to dispersed power plants. In both the energy park and dispersed plant configurations either emission control equipment or fuel clean-up equipment is required to meet emission standards.

Unlike emission standards, ambient air quality standards have the potential for introducing significant constraints on park design, especially in the case of sulfur dioxide. Analysis of ambient air quality in the vicinity of coal energy parks as large as 30,000 MW indicates that both primary and secondary standards for particulates and nitrogen oxides introduce no constraints on park design or operation. Ambient air quality standards for SO_2, however, introduce significant constraints on coal energy parks. The previous points are illustrated in Table 1/2.7-1 which summarizes environmental standards applicable to coal-fired energy parks and indicates maximum ground level concentrations for a typical plant (two 1320 MW generating units) and the basic energy park (24 generating units). The maximum ground level concentrations are based on stack emissions which just meet emission standards. As indicated in Table 1/2.7-1, all ambient air quality standards for particulates and nitrogen oxides are satisfied for the basic energy park. The basic energy park's maximum short term (3 and 24 hour averages) concentrations of SO_2, however, greatly exceed standards. Even in the case of the typical plant the 24 hour SO_2 standard is slightly exceeded. Since the short term standards are specified in terms of levels "not to be exceeded more than once per year", it is necessary to consider both concentration levels and frequency of occurrence to determine compliance. For example if the SO_2 concentration levels associated with parks shown in Table 1/2.7-1 occur only once per year, federal standards would be met. Frequency of occurrence is discussed in more detail later in this section.

In reviewing Table 1/2.7-1, it is interesting to compare the energy park's SO_2 concentrations to the typical plant's concentrations. The short term concentrations (3 hours, 24 hours) are only four times greater for the park, significantly less than the 12 multiplier on installed capacity. In terms of short term SO_2 concentrations, at least, the energy park does not degrade ambient air quality as much as one might initially assume. Such is not the case for long term concentrations (annual average) which are 12 times greater for the park. The explanation for this behavior is the fact that maximum short term concentrations occur relatively close to the source (1-10km) and under

TABLE 1/2.7-1

COMPARISON OF AMBIENT AIR QUALITY STANDARDS AND MAXIMUM GROUND LEVEL CONCENTRATIONS FOR A POWER PLANT & AN ENERGY PARK

	Sulfur Dioxide	Nitrogen Dioxide	Particulates
Emission Standards (lb/MBTU)	1.2	.70	.10
Ambient Air Quality Standards ($\mu g/m^3$)			
. 3 Hour Secondary	1300	-	-
. 24 Hour Primary	365	-	260
. 24 Hour Secondary	260	-	150
. 1 Year Primary	80	100	75
. 1 Year Secondary	60	100	60
Emissions from a Unit Pair (2640 MW) Meeting Emission Standards ($\mu g/sec$)	3580	2090	300
Maximum Ground Level Concentrations ($\mu g/m^3$) For Unit Pair			
. 3 Hours	555	325	47
. 24 Hours	366	214	31
. 1 Year	2.7	1.6	.2
Maximum Ground Level Concentrations ($\mu g/m^3$) for the Basic Energy Park			
. 3 Hours	2185	1276	183
. 24 Hours	1442	842	121
. 1 Year	32.4	19	2.7

NOTES:

1. The 3 hour and 24 hour ambient air quality standards presented are values which "are not to be exceeded more than once per year".
2. Maximum ground level concentrations are based on pollutant emisssions equal to emission standards.
3. Basic energy park: 24 generating units within .84 square miles.

stability conditions where stack height and unit separation have a significant impact. Annual averages are more influenced by concentrations further from the source where stack height and unit separation have little impact.

The discussion throughout the remainder of this section is devoted to ground level concentrations of SO_2. As previously indicated particulates and nitrogen oxides introduce no constraints on park design/operation, assuming emission standards are satisfied. In order to more completely describe ambient air quality in the vicinity of coal-fired generating units it is necessary to consider frequency of occurrence of various concentration levels. Figure 1/2.7-2 shows the probability distribution function for 3 hour average concentrations of SO_2. Cumulative probabilities are shown for a typical dispersed site (2 units), the basic park (24 units within .84 sq. miles) and the spread out park (24 units within 36 sq. miles). The figure illustrates the significant impact of stack spacing within the park since the basic park clearly exceeds the 3 hour standard whereas the spread out park is in compliance. Similar probability density functions are shown in Figure 1/2.7-3 for 24 hour average concentrations. In this case both energy park configurations exceed both primary and secondary standards. In fact, even the typical dispersed site plant exceeds standards.

The interesting characteristic of all the probability distribution functions shown in Figures 1/2.7-2 and 1/2.7-3 is their steep slope up to the 90-99% level where there is a knee in the curve. What this means in terms of compliance with environmental standards is that there is no problem 90-99% of the time. Ambient concentration levels are excessive only occasionally. What the curve shape means in terms of sensitivity of results to model errors, etc. is that the basic park would still be in trouble even if over-estimated concentrations were adjusted downward. Figure 1/2.7-4 illustrates the impact of changing from 3.5% sulfur content fuel with 80% scrubber efficiency to 3.5% sulfur with 90% scrubber efficiency. Although the maximum concentration levels have been reduced by 50%, the basic park still exceeds primary and secondary standards more than 7% of the time.

Figure 1/2.7-5 shows probability distribution functions for energy parks consisting of 6, 8, 12, and 24 generating units. A comparison of Figures 1/2.7-5 and 1/2.7-3 indicates that an 6 unit park, although still not strictly in compliance, results in little air quality degradation as compared to a typical two unit plant. Figure 1/2.7-5 is based on emissions which just meet emission standards, 3.5% sulfur coal and 80% scrubber efficiency. By using lower

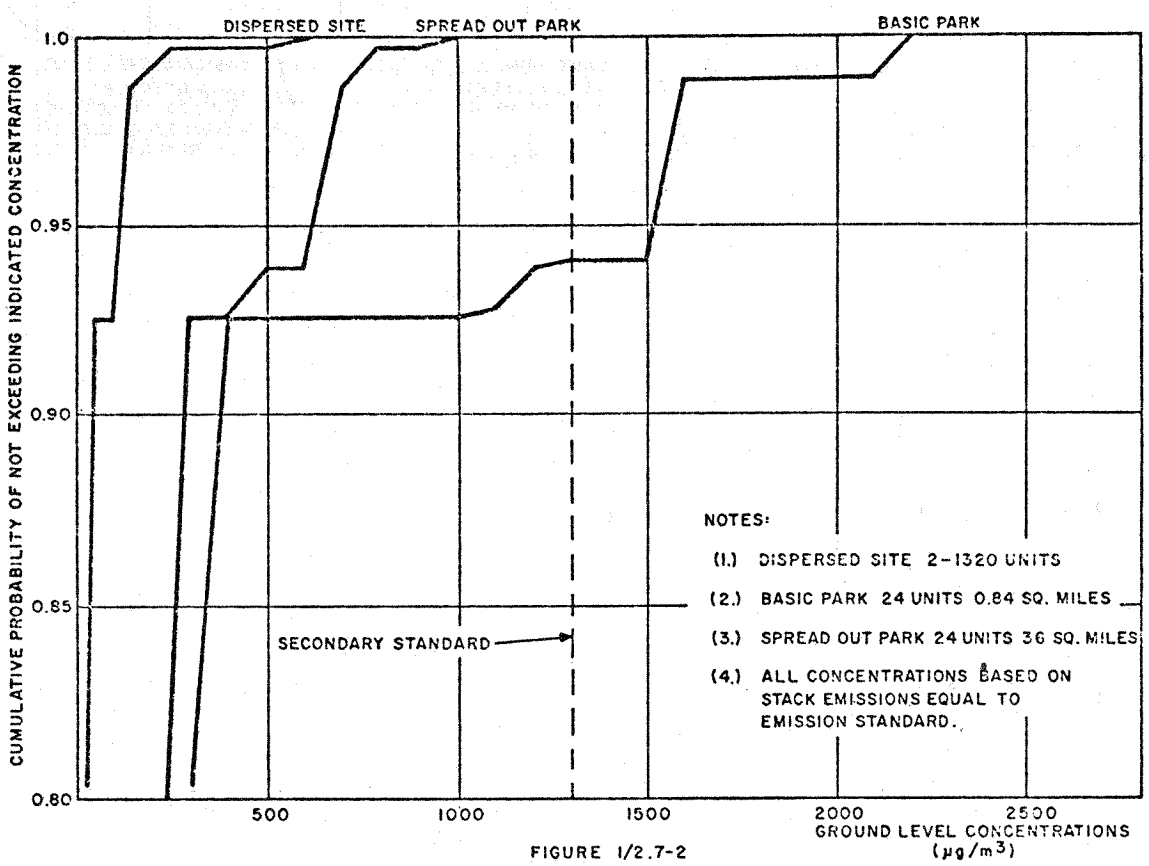

FIGURE 1/2.7-2
CUMULATIVE DISTRIBUTION OF 3 HOUR CONCENTRATIONS

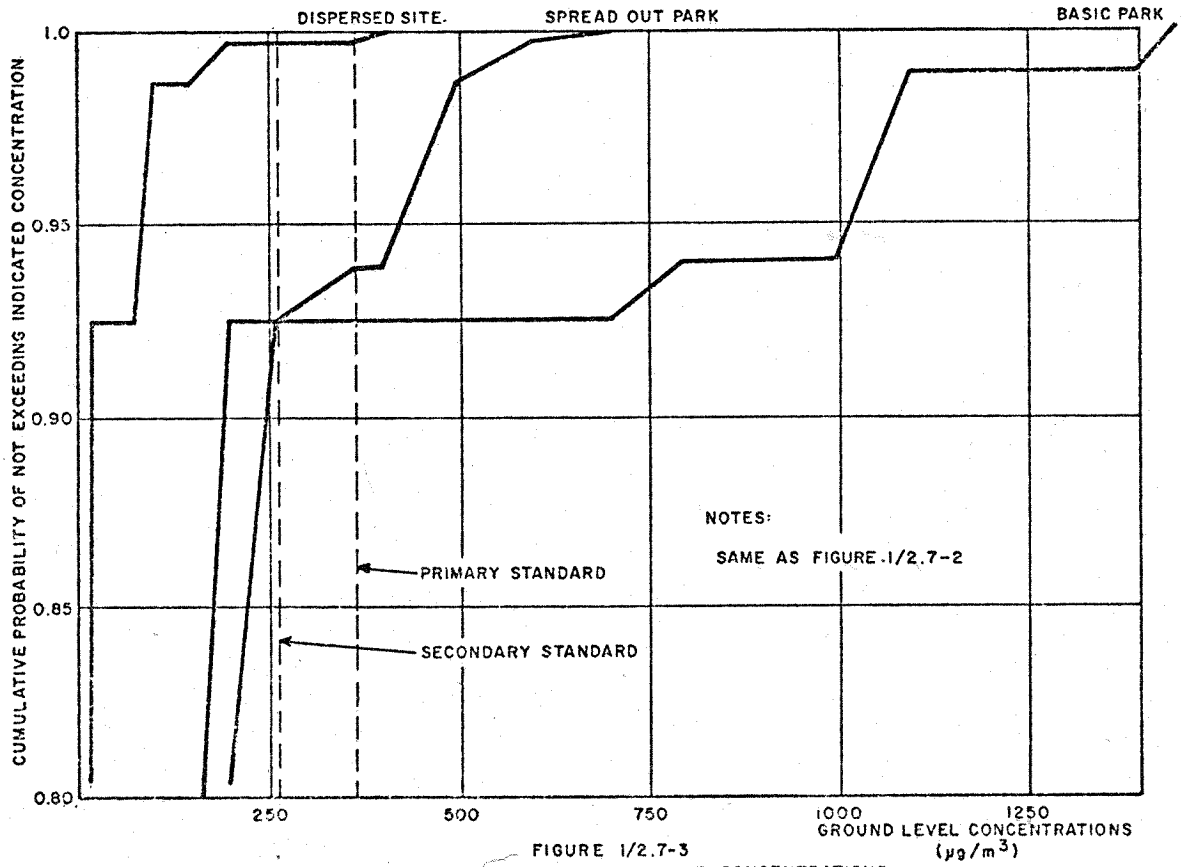

FIGURE 1/2.7-3
CUMULATIVE DISTRIBUTION OF 24 HOUR CONCENTRATIONS

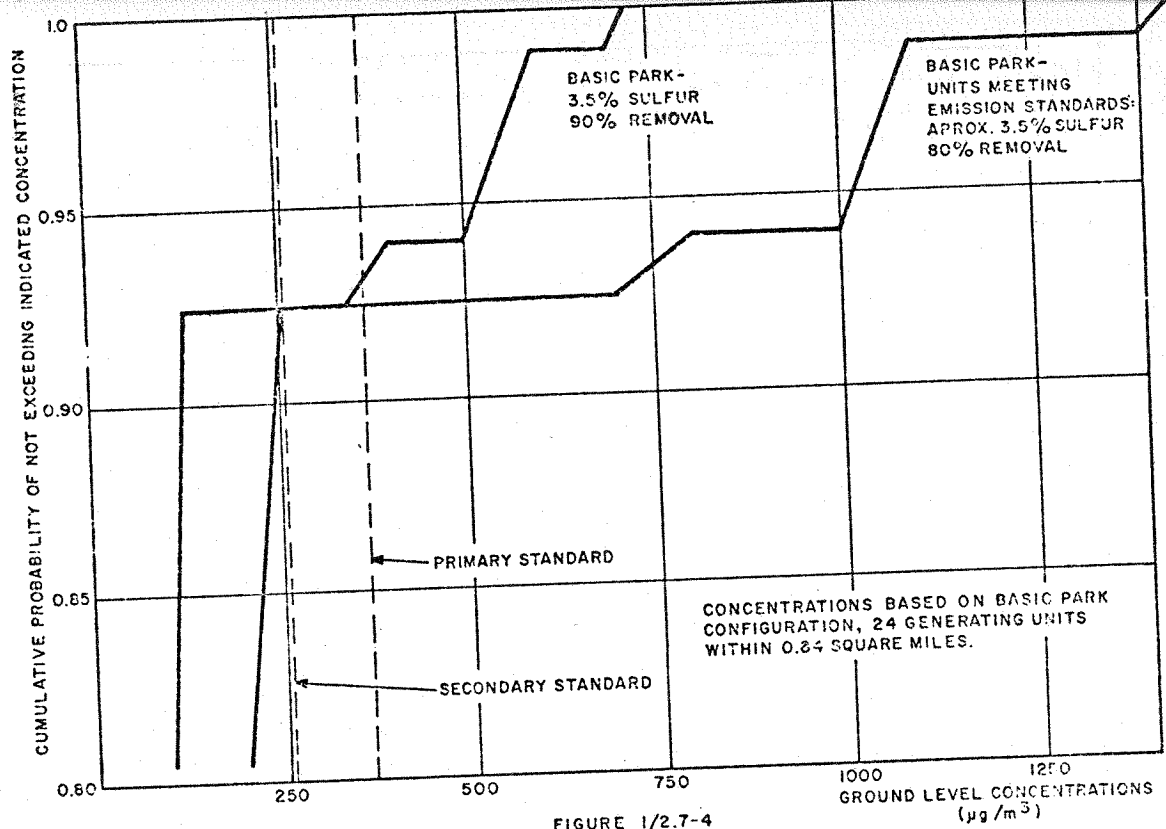

FIGURE 1/2.7-4
CUMULATIVE DISTRIBUTION OF 24 HOUR CONCENTRATIONS

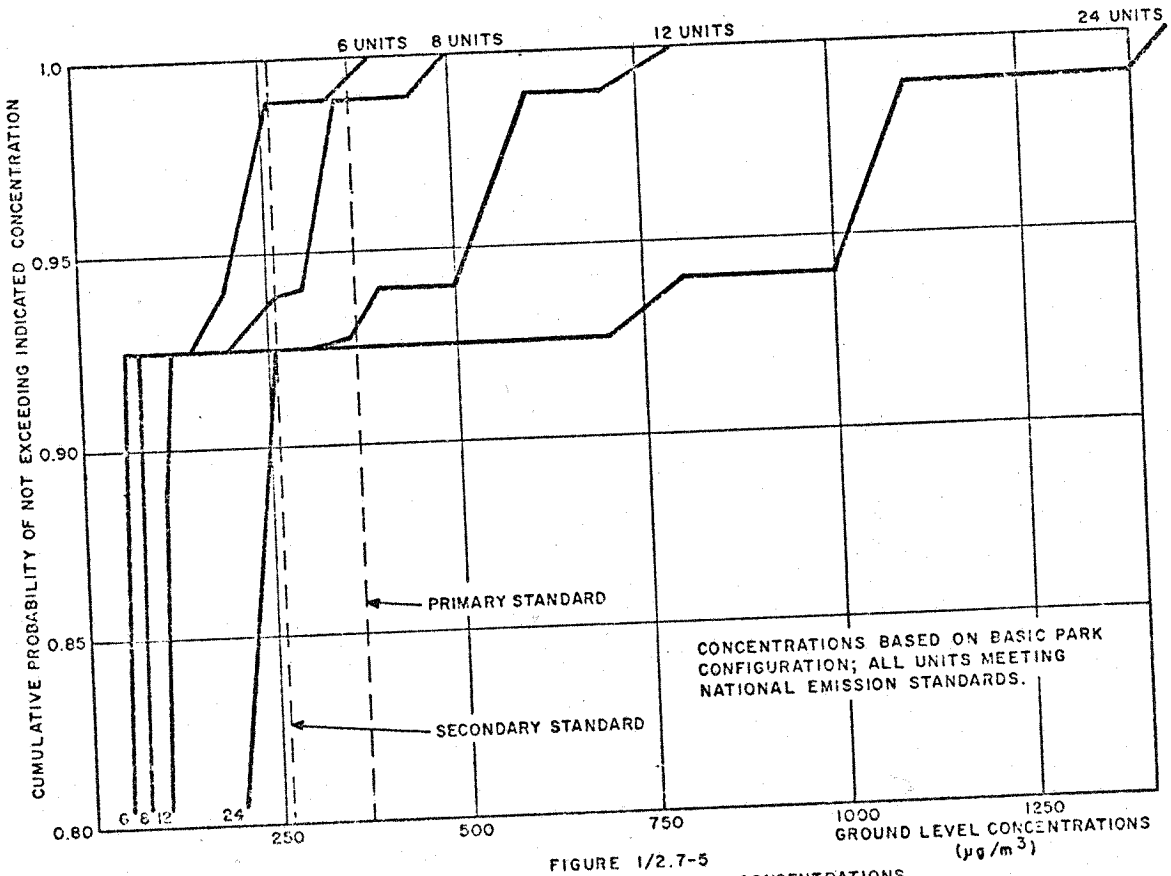

FIGURE 1/2.7-5
CUMULATIVE DISTRIBUTION OF 24 HOUR CONCENTRATIONS

sulfur coal and improving scrubber performance it would be possible to reduce maximum concentrations to the point where a 24 unit park would be compliant with federal regulations. The family of curves presented in Figure 1/2.7-6 shows minimum scrubber efficiency levels needed to meet all ambient air quality standards as a function of percent sulfur and fuel heating value. For example, assuming 2.6% S, 12,000 BTU/lb coal, the minimum scrubber efficiency would be 95%. Although significant questions concerning maintenance requirements and impact on system reliability remain, 95% scrubber efficiencies are possible so a 24 unit park would be possible assuming 2.6% sulfur coal.

Although the results presented in Figures 1/2.7-2 through 1/2.7-6 give a very good indication of the impact of various parameters on ground level concentrations it is important to recognize many conservative assumptions were made in developing the results. For example, the correction factor to adjust one hour concentrations to 24 hour concentrations was assumed to be .53 whereas TVA recommends a value as low as 0.2. Other conservative assumptions are discussed in Sections 1/2.7.4.4 and 1/2.7.4.5. In addition, significantly more analysis could be performed to identify optimum stack spacing in terms of economics and environmental impact.

Based on the basic park configuration used to develop Figure 1/2.7-5 and emissions which just meet standards (3.5% S, 12,000BTU/lb coal with an 80% scrubber), the maximum energy park size is about 6-8 units (7920-10,560 MW). If scrubber efficiency is increased to 90%, the maximum park size would be 8-12 units (10,560 MW-15,840MW). These results are all based on the assumption that intermittent supplementary controls are not a satisfactory solution as far as EPA is concerned. The appeal of supplementary controls is definitely obvious since standards are exceeded only occasionally.

Shown below are the per unit emission rates necessary to never exceed the various ambient air quality standards, and also the rates necessary to insure that the standards are exceeded less than 5 days a year. For this table an emission rate of one per unit corresponds to just meeting the national emission standards.

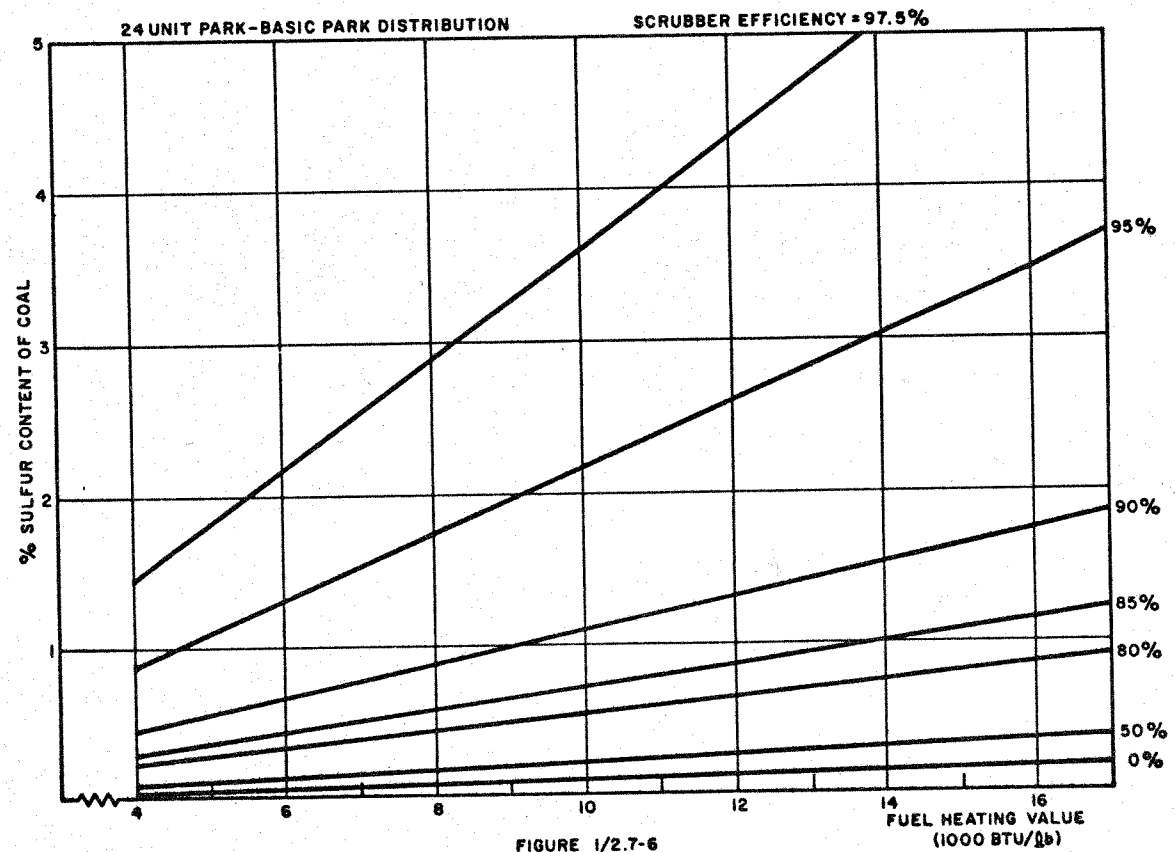

FIGURE 1/2.7-6
VALUES NECESSARY TO SATISFY ALL AMBIANT AIR QUALITY STANDARDS FOR BASIC ENERGY PARK

TABLE 1/2.7-2

COMPARISON OF MAXIMUM ANNUAL AVERAGE GROUND LEVEL CONCENTRATIONS FOR DISPERSED POWER PLANTS & ENERGY PARKS

	Maximum Annual Average Concentration ($\mu g/m^3$)	
Description of Emission Source	Rochester Wind Rose	Uniform Wind Rose
Single Source	2.7	9.9
Basic Energy Park	32.4	96.5
Spread Out Park	29.4	58.0
Dispersed Siting	16.8	14.1
Primary AAQ Standard =	80 $\mu g/m^3$	
Secondary AAQ Standard =	60 $\mu g/m^3$	

NOTES:

1. Single source: A typical power plant consisting of a pair of 1320 MW generating units.

2. Basic energy park: 24 generating units within .84 square miles.

3. Spread out park: 24 generating units within 36 square miles.

4. Dispersed siting: 24 generating units within 2025 square miles.

	Primary 24 Hr.	Secondary 3 Hr.	Secondary 24 H
Never Exceed Standards			
. 2 units	.99	2.3	.71
. Basic Park	.25	.60	.18
. Spread Out Park	.60	1.3	.42
Exceed Standards Less Than 5 Days a Year			
. 2 units	3.8	9.1	2.7
. Basic Park	.36	.84	.25
. Spread Out Park	.87	2.1	.62

Obviously major improvements must be made in a system just to remove the possibility of violation of standards for only a few days a year. This agrees with the position that many utilities are presently taking on the use of intermittent supplementary controls.

In addition to the analysis of short term concentrations, long term concentrations were investigated. In much the same manner as the short term analysis the long term analysis considered a basic park configuration, a spread out park and a typical two unit power plant. In addition the long term analysis also considered a dispersed siting situation where 24 units were distributed over a 2025 sq. mile area. The results of the long term analysis are summarized in Table 1/2.7-2. As indicated two wind roses were considered: a Rochester, New York wind rose and a uniform wind rose where all wind speeds, wind directions and stability classes were equally likely. The reason for considering two wind roses was to determine the sensitivity of results to changes in meteorological conditions. For the Rochester wind rose, both park configurations meet the primary and secondary annual standards. In the case of the uniform wind rose, the basic energy park exceeds both standards, whereas the spread out park is compliant. In general, since the Rochester wind rose is typical of most areas, it is safe to assume that long term standards introduce no significant constraints on coal-fired energy parks.

1/2.7.2 Flue Gas Desulfurization

While the preceeding discussions are concerned with environmental standards and their possible constraints on the ultimate size of a coal-fired energy park, this section discusses some of the means available for meeting the stack emission standards for new sources and the costs associated

with the method chosen as the base case for this study.

Section 1/2.7.3 which follows contains the costs that have been assumed in the total plant estimates for other necessary environmental protection controls. Controls are provided for noise abatement, waste water treatment, additional particulates, and NO_x. Aesthetics of the site are also considered.

Heat rejection is considered separately in Section 1/2.8.

In the appendices to this Section, 1/2.7.4, the air standards applicable to fossil power plants are summarized. Basically there are three standards that are important. These are:

Particulates	.1 $lb/10^6$ BTU HEAT INPUT
SO_2	1.2 $lb/10^6$ BTU HEAT INPUT
NO_x	.7 $lb/10^6$ BTU HEAT INPUT

for coal-fired plants[29]. More stringent requirements can and have been applied on an individual basis in areas where ground level concentrations exceed primary levels of the ambient air quality standards. After much intensive process development, SO_2 removal systems for power plant stack gas clean-up have now proceeded through the demonstration plant phase. These large scale projects have uncovered and corrected most of the problems and an acceptable assessment of process costs should be possible. However, rapid construction cost escalation during 1974 makes it difficult to project total costs. Reference 29 contains a complete and comprehensive cost comparison of the five most prominent processes being considered for installation and are described briefly below:

SO_2 Removal Processes

1. Limestone Slurry Scrubbing. Stack gas is washed with a recirculating slurry (pH of 5.8-6.4) of limestone and reacted calcium salts in water using a two-stage (venturi and mobile bed) scrubber system for particulate and SO_2 removal. Limestone feed is wet ground prior to addition to the scrubber effluent holding tank. Calcium sulfite and sulfate salts are withdrawn to a disposal area for discard. Reheat of stack gas to 175°F is provided. Design is based on data taken from EPA-TVA-Bechtel Shawnee test program.

2. Lime Slurry Scrubbing. Stack gas is washed with a recirculating slurry (pH of 6.0-8.0) of calcined limestone

(lime) and reacted calcium salts in water using two stages of venturi scrubbing. Lime is purchased from an "across the fence" calcination operation, slaked, and added to both circulation streams. Calcium sulfite and sulfate is withdrawn to a disposal area for discard. Reheat of stack gas to 175°F is provided. Design is based on data provided by Chemical Construction Corporation (Chemico).

3. Magnesia Slurry Scrubbing - Regeneration to H_2SO_4. Stack gas is washed using two separate stages of venturi scrubbing -- the first utilizing water for removal of particulates, and the second utilizing a recirculating slurry (pH 7.5-8.5) of magnesia (MgO) and reacted magnesium - sulfur salts in water for removal of SO_2. Makeup magnesia is slaked and added to cover only handling losses since sulfates formed are reduced during regeneration. Slurry from the SO_2 scrubber is dewatered, dried, calcined, and recycled during which concentrated SO_2 is evolved to a contact sulfuric acid plant producing 98% acid. Design is based on data supplied by Chemico - Basic Corporation.

4. Sodium Solution Scrubbing - SO_2 Regeneration and Reduction to Sulfur. Stack gas is washed with water in a venturi scrubber for removal of particulates and then washed in a valve tray scrubber with a recirculating solution of sodium salts in water for SO_2 removal. Makeup sodium carbonate is added to cover losses due to handling and oxidation of sodium sulfite to sulfate. Sodium sulfate crystals are purged from the system, dried, and sold. Water is evaporated from the scrubbing solution using a single-effect evaporator to crystallize and thermally decompose sodium bisulfite, driving off concentrated SO_2. The resulting sodium sulfite is recycled to the scrubber and the SO_2 is reacted with methane for reduction to elemental sulfur. The regeneration and reduction areas are designed for 100% of power unit load. Design for the scrubbing - evaporator - crystallizer system is provided by Davy Powergas Inc. (Wellman-Lord process) and data for the SO_2 reduction unit are provided by Allied Chemical Corporation.

5. Catalytic Oxidation. Stack gas is first cleaned of particulates by a high-temperature electrostatic precipitator; then, the SO_2 is catalytically converted to SO_3 and available excess heat is recovered. The SO_3 reacts with moisture in the stack gas to form H_2SO_4 mist which is scrubbed in a packed tower using a recirculating acid stream to yield 80% acid. Mist is removed by a Brink mist eliminator and the clean 254°F gas is exhausted to the stack. Design is based on data supplied by Monsanto Company, developers of Cat-OX process.

In addition to these five processes others such as the Doble Alkali Process are also available but are not considered in this study. See Reference 29.

While the technology may be adequate for controlling SO_x emissions, only recently have any of these processes demonstrated operational reliability required by regulating authorities. Since long term operating data has not yet been collected, it is hard to assess the long term performance of these processes.

These processes where applied are augmented by electrostatic precipitators when necessary which are included in the cost estimates. The precipitators remove fly ash and other particulates and have been to date more successful than SO_x removal systems in their performance and reliability.

While this report will not go into a detailed breakdown of the costs of these various processes some of the major cost considerations and assumptions used in estimating the costs as they apply to energy parks will be mentioned and the reader is referred to Reference 29 for more details.

1/2.7.5.1 PROCESS ASSUMPTIONS. The following list has been changed somewhat from that found in Reference 29 to make it applicable to energy parks.

Project Schedule:	3 year construction cycle with starting year post 1975
Unit Size:	885 - 1320 MW's
Fuel Type:	Coal, 12000 BTU/lb, 12% ash
Sulfur Content:	3.5%
Plant Status:	New units rather than retrofits.
SO_2 Removal:	80% removal
Particulate Removal:	98.7%
Maintenance Costs:	Level will be estimated.
Capital Charges:	Handled by cost-benefit program in Task 9.

Operating Time:	5694, 6570, or 7446 hours per year depending on plant capacity factor of .65, .75 or .85% being run during sensitivity analyses.
Solids Disposal:	On-site ponding including prorated costs for calcium solids to cover pumping and piping to and from the pond plus a 40 foot deep, clay-lined pond sized to meet requirements over at least 2/3 of the remaining life of each power unit. Some of the conceptual layouts shown previously contain enough land for sludge and ash deposits over the entire plant life. Hopefully, technology on scrubbing systems will advance as the park evolves so that either regenerative systems become reliable for large units or that other uses for the fixed sludge reduce the ultimate need for on-site storage. The land requirements shown previously allow enough space for both sludge and ash deposit on-site. The cost of pumps, pipes, etc. for the fly ash were not included in the TVA estimates, Reference 29. The costs used for this study will vary significantly from those found in the TVA study and will include sufficient funds to purchase these items.
Proven Systems:	The base case process chosen for the energy park study will be assumed to have been reliably proven, will not need redundancy and will be built by an experienced design and construction team with no labor shortages or overtime pay incentives. Perhaps by

the time the park construction has begun, these systems will lend themselves to modularization as discussed in Section 1/2.6.

Process Chosen:

The process chosen for consideration in this study is the limestone slurry process. The TVA reference considers the accuracy for the cost of this process to be in the range of +20% to -5%. This process for 3.5% sulfur coal also has the lowest annual operating costs of the five processes considered by the TVA. The study on energy parks will assume the same SO_2 scrubbing system is applied to units situated in dual unit dispersed sites and to units in the 24 unit coal-fired energy park.

It is not this author's intention to advocate any particular scrubber process at this juncture. It is only necessary to include enough money in the cost estimates being used for the cost benefit-sensitivity analysis reported in Task 9 to provide a flue gas desulfurization system sufficiently reliable to meet the new source air quality standards. All five processes mentioned herein and many others are candidates for specific application to coal-fired power plants.

1/2.7.2.2 BY-PRODUCTS OF SO_2 REMOVAL SYSTEMS. This section is included to give the reader a feeling for the immense solids handling problem created by the waste by-products of typical flue gas desulfurization processes. The following Table 1/2.7.2-1 summarizes the typical waste by-products created over a 35-year life span of a 1000 MW unit fired with eastern coal. This information is from Reference 30.

TABLE 1/2.7.2-1
By-Products Removed By SO_2 Systems
1000 MW Plant - 35-Year Life

By-Product	Quantity (millions of tons)
Sulfur	2
Liquid SO_2	4
Conc. H_2SO_4	6
Dry Sludge (lime)	10
Dilute H_2SO_4	20
Wet Sludge	30

Bear in mind that these by-products are created by one 1000 MW unit in a 35-year life time and an energy park, with a rating of 26,240 MW would generate roughly 26.2 times these quantities over 58 years (35-year life/unit + 23 years to complete construction of all the units in the park).

This gigantic outpouring of wet sludge, over 750 million tons, points up the urgent necessity to develop regenerative systems that are economical to install, inexpensive to operate, and sufficiently reliable to merit their use.

1/2.7.2.3 CAPITAL COSTS OF SO_2 REMOVAL SYSTEMS. Flue gas desulfurization system costs are as described previously not easy to establish because of the many cost factors that are influenced by design changes on new processes, the rapidly changing equipment costs during 1974, etc. Reference 30 places the investment costs for wet absorber sulfur dioxide control systems (limestone scrubbing) installed in the mid 1970's in the range of $40 to $60 per kilowatt for 500 to 1000 MW units. The TVA estimates fall within this same range for 500 to 1000 MW units also but their costs were estimated for a project construction cycle from 1972-1975 and therefore could be considered low.

The TVA study has an interesting Table 12 which shows the limestone slurry process investment costs for a modified project scope. This table shows that the basic $50.30/Kw for a 500 MW unit burning coal with 3.5% sulfur, 12% ash can vary up to as high as $113/Kw with the following contingencies:

A. Overtime to accelerate project.
B. Research and development costs for first of a kind process technology.

C. Power generation capital for lost capacity.
D. Reliability provisions with added redundancy of scrubbers, other equipment, ducts, dampers, instrumentation for change over (assumes no permission to run power plant without meeting SO_2 removal emission standards at all times).
E. Additional bypass ducts and dampers.
F. Fly ash pond including closed loop provisions.
G. 500 foot stack added to project cost.
H. Air quality monitoring system.
I. Higher cost escalation than the 5% estimated.
J. Possible delay of up to 2 years in equipment and material deliveries pushing out completion date.

While not all of these necessarily occur on a given project, the list indicates that a wide variation in costs is possible.

For this energy park study the flue gas desulfurization system was estimated at $50/Kw for a 1000 MW unit in 1971 dollars as was done in Reference 2, WASH 1345. This cost was then escalated to 1975 dollars as was the rest of the fossil fired unit. The escalation process is described in Section 1/2.5.

The $50/Kw in 1971 dollars becomes approximately $79/Kw in 1975 dollars. A scale factor is then applied for the entire unit including the scrubbing system to represent the cost variation with size in going from a 1000 MW unit to the three unit sizes being used in this energy park study (885 MW, 1075 MW, 1320 MW). It should be understood that the $79/Kw is a first unit cost and that even in a dual unit dispersed site the multiplier for learning and "multiple by" savings will reduce the second unit cost.

In the energy park, the first unit cost has been reduced by direct labor savings attributed to the modularization approach for construction and successive units show a further reduction in investment for the entire unit including the scrubbing system.

1/2.7.2.4 OPERATION AND MAINTENANCE OF THE SCRUBBING SYSTEM. Aside from fixed capital charges, the components of the annual operating costs are maintenance, energy to operate the system, raw material, and by-product disposal.

The limestone slurry process has the lowest annual operating cost for coal with a 3.5% sulfur content. As the sulfur content changes these costs vary from process to process. The operating costs are roughly distributed as follows:

	Ranges
Capital Charges	40-50%
Maintenance	7-17%
Energy to Operate	5-35%
Raw Materials	8-40%
Total Mills/KwHr (increased cost of power to consumer)	
All Processes	1.57-7.9
Limestone Slurry	2.86-3.8

For interesting comparison the TVA study, Reference 29, gives the operating costs on a 500 MW unit using the limestone slurry process to be proportioned:

	% of Total Annual Operating Cost
Raw Material	9.1
Construction Costs	
Oper. Labor & Supv.	2.7
Utilities	
Steam	4.5
Process Water	.3
Electricity	10.2
Maintenance	
Labor & Materials	16.7
Analysis	.6
Indirect Costs	
Capital Chgs. @ 14.9% FCR	48.6
Overhead	
Plant	7.0
Administrative	.3
TOTAL	100.0

Annual costs for operating this process are:

$5.9/Ton of Coal Burned or
24.5¢/10^6 BTU Heat Input or
214.7/Ton of Sulfur Removed or
2.2 mills/KwHr.

In Reference 30, it is concluded that the incremental energy cost for operating a SO_x limestone scrubbing system is in the range of 1.5 to 2.2 mills/KwHr. For this study the capital charge portion of the operating cost is handled

automatically by the cost benefit-sensitivity program described in Task 9 and the remaining annual operating costs are handled as one of the components that make up the assumed operation and maintenance costs for the 885, 1075, and 1320 MW units being studied. The costs assumed for the first unit at a dual unit site or a 24 unit energy park are documented in Section 1/2.5. Operation and maintenance costs on successive units are reduced by the multiple unit operation and maintenance relative cost factors of Section 1/2.5. The operation and maintenance costs for the unit exclusive of fixed charges and energy penalties is assumed to be in the range of 2.8 to 3.0 mills/KwHr and includes all operation and maintenance costs for the unit, the environmental protection systems, and the heat rejection system.

1/2.7.3 Additional Environmental Protection Costs

In addition to SO_x removal systems there are several other environmental protection systems whose costs are included in the basic estimates for the 885, 1075 and 1320 MW coal-fired units.

Particulate control devices such as electrostatic precipitators are assumed to be part of the scrubbing system costs. When lignite or other low sulfur, high ash western coals are burned it may be possible to eliminate the scrubbing system and have only precipitators which would then cost in the neighborhood of $35 to $50 per kilowatt. In any application, for any type coal, precipitators will be necessary to control particulates to the required air quality standards.

Even low sulfur coal leaves the user with a NO_x control problem. The current status of NO_x control technology is that boiler manufacturers guarantee compliance with federal emission regulations for new units by applying such techniques as flue gas recirculation, overfire air, special burner locations, and staged combustion. These techniques serve to prevent the formation of NO_x. In this study $5/Kw was included in the capital cost of a 1000 MW coal-fired unit to provide for gas recirculation, overfire air, and increased boiler size[31].

Sludge ponds for all air quality control system waste products are thought to cost between $5 to $20 per kilowatt depending upon the necessity for lining the pond to limit seepage. The cost of this item was included in the flue gas desulfurization system costs[30].

Another cost that has been included in the basic estimate for a 1000 MW coal-fired unit is $5/Kw for additional systems to provide for waste water treatment for additional wastes from sanitary sources, fly ash sluicing, desulfurization sludge, cooling tower blowdown, boiler water blowdown, NO_x control wastewaters (if any), storm water run-off, and other plant clean-up wastes.

An arbitrarily chosen $1/Kw is included in the basic 1000 MW unit estimate to provide for coal dust prevention measures should they be required. It is believed that the over 700 acres of stored coal at the energy park coupled with the possibility of large air circulation currents created by all of the cooling towers and stacks might lead to the necessity for control of coal dust.

Lastly, $6/Kw is included in the basic 1000 MW unit estimate to cover the costs of noise abatement, general plant aesthetics and the preparation of the required environmental impact statement.

Fossil-fired plants on urban or near-urban sites will be required to comply with Noise Control Act of 1972. While the exact regulatory limits and standards for steam turbine plants are not yet established, by the time an energy park is begun some provisions will undoubtedly be needed to meet the standards being enforced at that time[30]. Cooling towers could tend to create noise problems which would need controls[32].

It is anticipated that any utility group formed to build a large fossil energy will be sensitive in providing a park layout that will be as pleasing as possible to look at. Therefore, some costs will be incurred to provide treatment, landscaping, etc. to assure an aesthetically acceptable site.

The last cost included is for preparation of the environmental impact statement. This cost may be very significant for an energy park since many analyses will be required to assess the true impact of such a large collection of power producing units in close proximity. The necessity for additional research on the environmental impacts of a 26,240 MW coal-fired energy park is pointed out repeatedly throughout this study.

In conclusion, environmental protection costs, can easily require expenditures in the range of $75 to $125 per kilowatt for a complete environmental control system on units of the megawatt size ratings being considered and that this is a significant portion of the total investment in the power generation equipment.

1/2.7.4 Appendices

1/2.7.4.1 AIR STANDARDS APPLICABLE TO FOSSIL PARKS.

The federal government's concern with air pollution officially began with the Air Pollution Act of 1955. Current federal activity in air pollution abatement and research stems from the Air Quality Act of 1967 and the Clean Air Act of 1970. The Clean Air Act of 1970 was the first law to call for national, uniform air quality standards based on geographic regions. Specifically, there are two types of standards applicable to fossil parks:

- Ambient Air Quality Standards
- National Emission Standards

Ambient Air Quality Standards. Ambient air quality is regulated by two sets of standards (primary and secondary), both determined by EPA. Primary air quality standards concern the minimum level of air quality that is necessary to keep people from becoming ill. These levels are based on the proven harmful effects of individual pollutants. Secondary air quality standards are aimed at the promotion of public welfare, and the prevention of damage to animals, plant life and property. Currently, EPA has a set of primary and secondary standards for six pollutants: sulfur dioxide, particulate matter, carbon monoxide, hydrocarbons, photochemicals and nitrogen dioxide. Standards for these pollutants shown in Table 1/2.7-3 establish the maximum amount of each pollutant that will be permitted in the atmosphere consistent with public health (primary standard) and welfare (secondary standard).

Although EPA has been given power to establish interstate air quality regions, each state retains authority for implementing national standards within its portion of an interstate region. State governments within each air quality region determine how national air pollution objectives are to be reached. States are required to meet the national primary standards by 1975; however, the Clean Air Act provides for a waiver of the 1975 deadline for up to an additional two years if compliance is technologically impossible and reasonable alternatives are inadequate. Although the timetable for secondary standards is more flexible than for primary standards, many state implementation plans (SIP's) have set 1975 as the date to meet both primary and secondary standards. State implementation plans submitted to EPA are plans which show in detail how and when states will achieve the standards within their own territory. It is interesting to note that in many areas states are imposing regulations

TABLE 1/2.7-3

AMBIENT AIR QUALITY STANDARDS

POLLUTANT	TYPE OF STANDARD	AVERAGING TIME	FREQUENCY PARAMETER	CONCENTRATION	
				$\mu g/m^3$	ppm
Carbon Monoxide	Primary and secondary	1 hr.	Annual maximum[a]	40,000	35
		8 hr.	Annual maximum	10,000	9
Hydrocarbons (nonmethane)	Primary and secondary	3 hr. (6 to 9 am)	Annual maximum	160[b]	0.24[b]
Nitrogen dioxide	Primary and secondary	1 yr.	Arithmetic mean	100	0.05
Photochemical oxidants	Primary and secondary	1 hr.	Annual maximum	160	0.08
Particulate matter	Primary	24 hr.	Annual maximum	260	----
		24 hr.	Annual geometric mean	75	----
	Secondary	24 hr.	Annual maximum	150	----
		24 hr.	Annual geometric mean	60[c]	----
Sulfur dioxide	Primary	24 hr.	Annual maximum	365	0.14
		1 yr.	Arithmetic mean	80	0.03
	Secondary	3 hr.	Annual maximum	1,300	0.5
		24 hr.	Annual maximum	260	0.10
		1 yr.	Arithmetic mean	60	0.02

[a]Not to be exceeded more than once per year.
[b]As a guide in devising implementation plans for achieving oxidant standards.
[c]As a guide to be used in assessing implementation plants for achieving the annual maximum 24-hour standard.

which require air even cleaner than secondary standards. On the other hand, the Administrator of EPA has urged the states to delay those emission regulations which would clean up well beyond primary standards in 1975.

National Emission Standards. As defined in Section III of the Clean Air Act, a new source is any stationary source -- a building, structure, facility, or installation which emits or may emit any air pollutant. The new stationary source emission standards are designed to reflect the best technology for each individual source. The long range goal and overriding purpose of the collective body of standards is to prevent new pollution problems from developing. The individual emission standards are not intended to be protective of health or welfare effects, in other words, the standards were not designed to achieve any air quality goals.

EPA directly regulates new stationary sources by setting uniform national standards for new air polluters. EPA has devised new source performance standards for five major stationary sources of air pollution:

1. Fossil fuel-fired steam generators
2. Incinerators
3. Cement Plants
4. Sulfuring acid manufacturing operations
5. Nitric acid manufacturing operations

These standards are designed to require application of the best available technology considering the cost of new facilities. Emission standards applicable to fossil fuel-fired generators are discussed below.

Regulations prescribing standards of performance for fossil fuel-fired steam generators were promulgated on December 23, 1971 and apply to sources, the construction or modification of which was commenced after August 17, 1971. Performance tests for affected facilities must be conducted within 60 days after the maximum production rate is achieved, but not later than 180 days after initial startup, and at such times as may be required by EPA. Although EPA promulgates standards of performance for new stationary sources, states are not precluded from enforcing any emission standard or limitation applicable to an affected facility as long as such standards or limitations are not less stringent than applicable federal standards.

Standards of performance for steam generators are applicable to each fossil fuel-fired steam generating unit of more than 250 million BTU per hour heat input, approximately equal to $25MW_e$ output; i.e.:

$$250 \times 10^6 \text{ BTU/Hr} = \frac{250 \times 10^6 \text{ BTU/Hr}}{3.413 \times 10^3 \text{ BTU/Hr/Kw}} = 73.5 \times 10^3 \text{ kW}_t =$$

$$73.5 \text{ MW}_t \simeq 25 \text{ MW}_e$$

Fossil fuel-fired steam generating units produce three types of emissions for which EPA has established emission limitation standards:

- Particulate Matter - Any finely divided liquid or solid material, other than uncombined water, as measured by weight after removel of uncombined water.
- Sulfur Dioxide
- Nitrogen Oxides

Emission limitation standards for these three emission types are discussed below.

Standards for Particulate Matter. This standard provides that an owner or operator of an affected facility may not discharge or cause the discharge into the atmosphere of particulate matter which is:

1. In excess of 0.10 lb per million BTU heat input (0.18 per million cal.) maximum two-hour average.
2. Greater than 20 percent opacity, except that 40 percent opacity is permissible for not more than two minutes in an hour. If the presence of uncombined water is the only reason for failure to meet this requirement, such failure is not deemed a violation of the standard.

Standard for Sulfur Dioxide. This standard provides that an owner or an operator of an affected facility may not discharge or cause the discharge into the atmosphere of sulfur dioxide in excess of:

1. 0.80 lb. per million BTU heat input (1.4 gram per million cal.), maximum two-hour average, when liquid fossil fuel is burned.
2. 1.2 lbs. per million BTU heat input (2.2 grams per million cal.), maximum two-hour average when solid fossil fuel is burned.

Standard for Nitrogen Oxides. This standard provides that an owner or operator of an affected facility may not

discharge or cause the discharge into the atmosphere of nitrogen oxides in excess of:

1. 0.20 lb. per million BTU heat input (0.36 grams per million cal.) maximum two-hour average, expressed as NO_2, when gaseous fossil fuel is burned.
2. 0.30 lb. per million BTU heat input (0.54 grams per million cal.) maximum two-hour average, expressed as NO_2 when liquid fossil fuel is burned.
3. 0.70 lb. per million BTU heat input (1.26 grams per million cal.) maximum two-hour average, expressed as NO_2, when solid fossil fuel (except lignite) is burned.

1/2.7.4.2 ALTERNATIVE PLUME DISPERSION MODELS AND COMPARISON WITH OBSERVED DATA.

Introduction. During the initial phase of the subtask involved with analysis of emissions from fossil energy parks, a number of atmospheric dispersion analysis approaches were reviewed. Based on this review the decision was made to use computer simulation models recommended by EPA and available through their UNAMAP (User's Network for Applied Modeling of Air Pollution) service. The purpose of this appendix is to review the primary models available for describing behavior of power plant emissions, to compare emission concentrations predicted by these models, and to investigate model accuracy via comparison with observed data.

Alternative Plume Dispersion Models. The general behavior of emissions from stacks has been qualitatively understood for many years. The principal patterns of stack gas dispersion are classified in terms of the plume shape and the manner of their dispersion in the ambient atmosphere. The basic dispersion patterns which have been identified in the literature are identified below:

- Coning
- Fanning
- Inversion Break-up or Fumigation
- Looping
- Lofting
- Trapping

Briggs[9] and Carpenter, et.al.[10] both have detailed discussions of the above dispersion patterns along with the associated meteorological conditions. Although plume dispersion has been qualitatively understood for some time, mathematical models of plume dispersion were not developed

until relatively recently. Presently, the engineer or meteorologist has a choice of many different, semi-empirical models available in the literature[9]. The major disadvantage of many of these plume dispersion models is the fact that they were derived from data or observations on relatively small emission sources. Models applicable to large coal-fired power plants have been identified by the Tennessee Valley Authority (TVA).

Since 1951, TVA has conducted comprehensive studies of plume dispersion at coal fired power plants for a variety of meteorological and operational conditions, plant sizes and stack heights. The earlier studies were sponsored by the U. S. Public Health service. Work performed since 1963 has been under sponsorship of the EPA Office of Air Programs. The TVA work involved several full-scale field experiments where plume rise was observed and surface and aerial SO_2 monitoring was conducted. Emission concentration data has been compiled and classified according to meteorological conditions and plume dispersion patterns for generating units ranging in size from 173 to 950 MW with stack heights varying from 76 to 244 meters. Various aspects of the TVA plume rise and dispersion studies are discussed in References 10 through 18.

As the TVA studies indicate, plume dispersion is most easily described and modelled if two aspects of plume behavior are treated separately: (1) plume rise due to buoyancy and initial vertical momementum (2) diffusion after plume rise due to turbulence in the air. Plume rise (described in terms of vertical displacement and horizontal distance from the emission source) is a critical determinant of surface concentrations of emissions from large power plants. Plume rise determines effective stack height (physical stack height plus vertical plume rise) an important input to the diffusion model. A review of the literature on plume dispersion indicates that there is rather general agreement on the behavior of plumes after the initial plume rise. As Turner[20] indicates, most of the widely used diffusion equations are variant forms of the basic Gaussian plume formula discussed later in this appendix. To use the Gaussian diffusion model to estimate ground level concentrations, however, it is necessary to first determine plume rise and effective stack height. There is no lack of plume rise formulas in the literature and for a given situation many different estimates can be obtained. The different theoretical models are the result of a wide variety of assumptions and/or different weightings of data collected during field tests. As previously indicated TVA has identified those plume rise models most applicable for large coal-fired power plants.

Plume Rise Models. Since 1963, TVA under the sponsorship of the EPA Office of Air Programs has conducted several comprehensive studies of plume rise at coal-fired plants. The initial study was a three year research project completed in 1966 entitled "Full-Scale Study of Plume Rise at Large Electric Generating Stations"[12]. During this study six plume rise models (Holland; Bosanquet, Carey & Halton; Davidson-Bryant; Csandy; CONCAWE and Lucas Moore & Spurr) were evaluated to determine correlation with observed plume behavior. Because of the trend of increasing unit sizes and stack heights at modern power plants, TVA conducted further analysis of plume rise during the 1967-1969 time period[13]. Based on these field tests, which involved generating units ranging in capacity from 173 to 950 MW and stack heights varying from 76 to 244 meters, TVA concluded that a modification of the Brigg's "2/3 power law" is preferable for estimating plume rise.

The Brigg's "2/3 power law" is a rather simple model which was developed after Briggs had evaluated a number of previously developed plume rise models[9,20]. The basic Briggs model is simply:

$$\Delta h = 1.6 \frac{F^{1/3} x^{2/3}}{\bar{u}}$$

where Δh = Plume rise (meters)

F = Buoyancy flux parameter (m^4/sec^3)

$= g V_s r^2 \frac{\Delta\rho}{\rho_a}$

x = Horizontal distance downwind of stack (m)

$\bar{u}$ = Mean wind speed between stack top and plume top (m/sec)

g = Gravitational acceleration (m/sec^2)

V_s = Stack gas exit velocity (m/sec)

r = Stack exit radius (m)

$\Delta\rho = \rho_a - \rho_s$

ρ_a = Density of ambient air (g/m^3)

ρ_s = Density of stack gas (g/m^3)

As the Briggs plume rise formula indicates, plume rise is a function of plume buoyancy, momentum and mean horizontal wind velocity between stack top and plume top. Based on comprehensive field experiments, TVA has concluded that

plume rise is also a function of atmospheric stability. Atmospheric stability, which is a measure of the degree to which the atmosphere resists or enhances vertical motion, can be determined from measurement of vertical temperature gradient ($\Delta\theta/\Delta Z$).

The modified Brigg's "2/3 power law" which TVA recommends for plume rise estimation is actually a set of equations for three ranges of atmospheric stability[17].

- For neutral atmospheric stability conditions ($-.17 < \Delta\theta/\Delta Z \leq .16^{\circ}$ C/100m) and downwind distances up to 3000 meters

$$\Delta h = \frac{2.50\ x^{0.56}\ F^{1/3}}{\bar{u}}$$

- For moderately stable atmospheric conditions ($0.16 < \Delta\theta/\Delta Z \leq 0.70\ ^{\circ}$C/100m) and downwind distances up to 2800 meters

$$\Delta h = \frac{3.75\ x^{0.49}\ F^{1/3}}{\bar{u}}$$

- For very stable atmospheric conditions ($.70 < \Delta\theta/\Delta Z \leq 1.87\ ^{\circ}$C/100m) and downwind distances up to 1960 meters

$$\Delta h = \frac{13.8\ x^{0.26}\ F^{1/3}}{\bar{u}}$$

The TVA studies indicate that the plume generally attains its maximum rise at about 1200-1800 meters downwind.

Plume Diffusion Models. Having identified the preferred plume rise model, we can now turn to the second phase of plume dispersion or diffusion due to turbulence in the air. Hereafter this phase of plume dispersion will simply be referred to as plume diffusion, recognizing that the diffusion reference point is the effective stack height. In identifying preferred diffusion models it is important to recognize what the model is to be used for. For example, the model used to identify maximum surface concentrations may not be the same as the model used to identify the frequency of occurrence of various levels of surface concentrations. TVA's experience indicates that there are three principal plume diffusion models:

- Coning model
- Inversion break-up model
- Trapping model

The coning model occurs with near-neutral stability conditions and moderate-to-high wind speeds. These conditions typically occur on cloudy and windy days or windy nights. The coning model plume is shaped somewhat like a cone with an extended horizontal axis. Emission concentrations are primarily a function of effective stack heights, wind speed, stability and location. The following Gaussian diffusion equation is suitable for mathematical estimates of concentrations occurring during coning conditions:

$$\chi = \frac{Q}{2\pi \sigma_y \sigma_z u} \exp\left[-\frac{1}{2}\left(\frac{y}{\sigma_y}\right)^2\right]$$

$$\left\{\exp\left[-\frac{1}{2}\left(\frac{Z-H}{\sigma_z}\right)^2\right] + \exp\left[-\frac{1}{2}\left(\frac{Z+H}{\sigma_z}\right)^2\right]\right\}$$

where χ = concentration (g/m^3)

u = Mean horizontal wind speed between stack top and plume top (m/sec)

σ_y = Standard deviation of plume concentration distribution in the horizontal crosswind direction(m). σ_y is a function of both stability and downwind distance x.

σ_z = Standard deviation of plume concentration distribution in the vertical direction(m). σ_z is a function of both stability and downwind distance x.

The coordinate system used for the Gaussian diffusion equation is illustrated in Figure 1/2.7-7. Both σ_y and σ_z are functions of stability and downwind distance from the source. The primary uncertainties in using the Gaussian coning model are the values of σ_y and σ_z. Turner[20] presents values which are based on an assumed sampling time of 15 minutes. Values for larger sampling times are substantially larger due to increased meander of wind direction. Values of σ_y and σ_z recommended by TVA[10,18] are somewhat different but the discrepancy could be explained by differences in sampling time.

The second significant model is the inversion break-up or fumigation model. This model occurs when emissions previously emitted and embedded in a surface - based inversion are dispersed to the ground by thermally induced vertical mixing. This situation occurs when the ground is warmed by solar radiation and the surface-based inversion is eliminated by the upward transfer of sensible heat. Pollutants previously emitted into the stable layer are mixed verti-

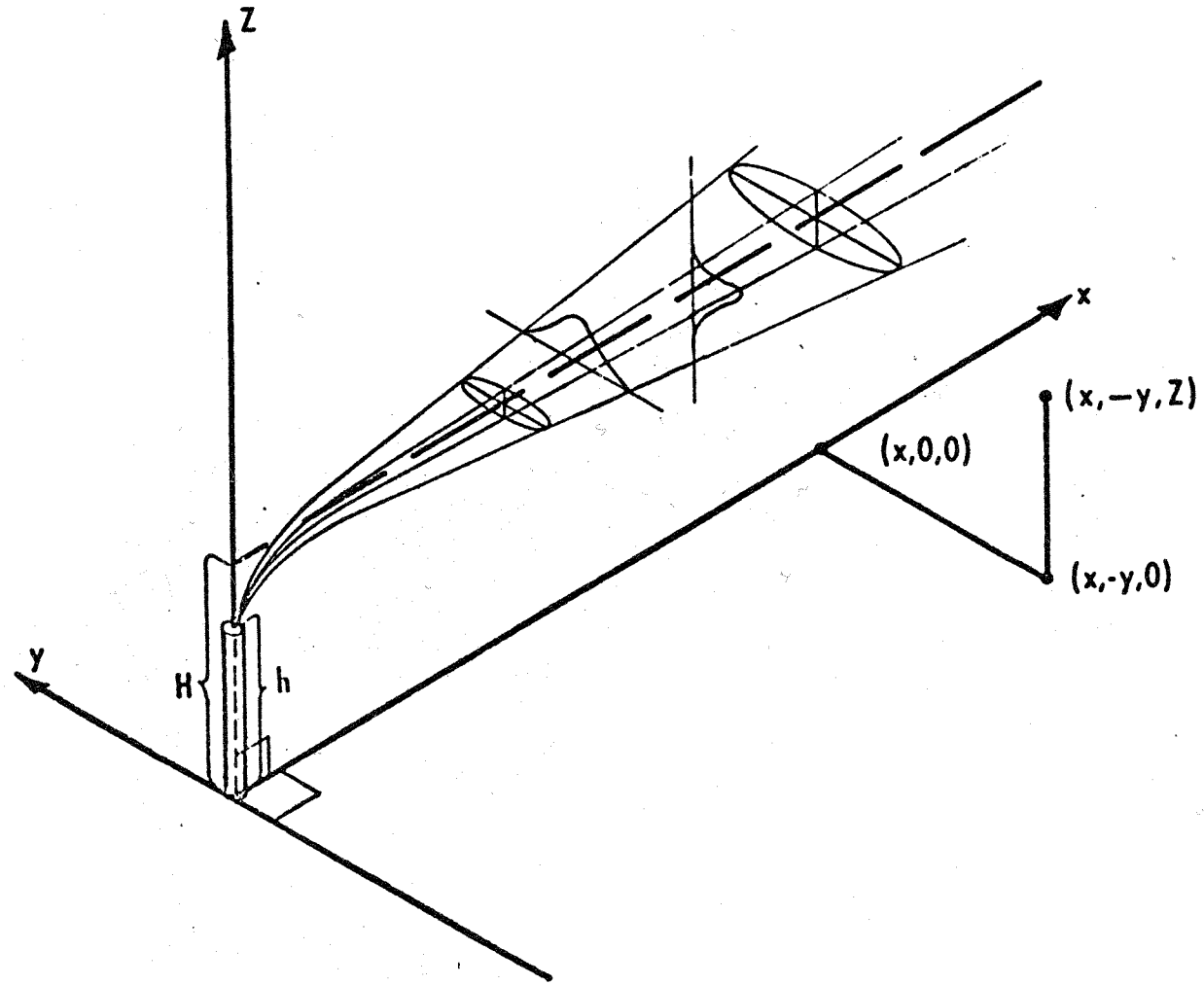

FIGURE 1/2.7-7

COORDINATE SYSTEM USED TO DESCRIBE PLUME DISPERSION

cally when they are reached by thermal eddies, resulting in increased ground level concentrations. TVA experience indicates that while maximum surface concentrations from inversion break-up may be high, they are generally of short duration, 30-45 minutes. Maximum concentrations from inversion break-up occur from 5 to 50 km from the source, usually limited to a narrow path beneath the initial stable plume. Data collected by TVA during full-scale studies of inversion break-up indicate that maximum surface concentrations may be estimated by:

$$(\chi)_{fumigation} = \frac{Q}{\sqrt{2\pi}\ \bar{u}\ \sigma_{yf}\ H_f}$$

where $\sigma_{yf} = \sigma_y + 0.47\ H_e$

$$H_f = \Delta h + h_s + 2.15\sigma_z = H_e + 2.15\sigma_z$$

A third significant diffusion model, particularly for larger power plants with tall stacks, is the trapping model. This model occurs when the plume is trapped between the ground surface and a stable layer aloft. Meteorological data collected by TVA indicates that plume trapping is always identified with a well developed high pressure system marked with very stable and light to moderate wind speed through the lower 2000 meters. The trapping model, also referred to as the limited mixing layer dispersion model is significant because stack height is a relatively minor determinant of ground level concentrations. The reason for this is that effective plume height during trapping conditions is primarily determined by the elevation and magnitude of the stable trapping layer. For some situations, however, buoyant plumes from tall stacks will be able to penetrate lower level trapping layers depositing emissions above the inversion layer. TVA has observed that the height of the stable layers associated with maximum surface concentrations is between 750 and 1200 meters. These maximum surface concentrations may persist for periods of 2-5 hours and occur relatively near the emission source (3-10 km). Based on preliminary analysis of trapping dispersion, TVA suggests that maximum surface concentrations can be estimated by:

$$(\chi)_{trapping} = \frac{Q}{\sqrt{2\pi}\ \sigma_{yt}\ \bar{u}\ H_t}$$

where $\sigma_{yt} = \sigma_y + H_t/1.1 - 2.15\ \sigma_z$ (m)

H_t = Height of trapping dispersion mixing layer (m)

The atmospheric dispersion models recommended by EPA are conceptually the same as the previous models. As discussed in the EPA Workbook of Atmospheric Dispersion Estimates[20], the basic Gaussian plume diffusion model has been modified to model the impact of plume trapping. The recommended EPA diffusion model is, therefore, a combination of the previously discussed coning and trapping models. As indicated in the preface to the EPA Workbook, EPA has recently turned to the Briggs method for estimating plume rise. Based on the fact that EPA air quality simulation models are programmed, readily available, and conceptually the same as TVA recommended models, the decision was made to use the EPA programs to conduct the environmental analysis of fossil energy parks. This approach eliminated the need for a significant programming effort. Although the basic models are quite simple, complete simulation programs can become very complex when multiple sources and receptors must be considered, annual wind rose data must be processed, etc. The EPA programs used in this study are part of their UNAMAP (User's Network for Applied Modelling of Air Pollution) service. A magnetic tape containing source FORTRAN codes for EPA's six UNAMAP models was obtained through NTIS and implemented on GE's computers in Schenectady.

Only two of the six UNAMAP models were used during the analysis, PTMTP and CDM. PTMTP is an interactive program which computes, at multiple receptors, short term concentrations (15 minutes-1 hour) resulting from multiple point sources[21]. The Climatological Dispersion Model (CDM) determines long term (seasonal or annual) pollutant concentrations based on average emission rates from point and area sources and wind rose data[22]. A wind rose is simply a joint frequency distribution of wind direction, wind speed and stability for a specified period.

Whenever mathematical models are utilized to simulate actual behavior, the investigator must inevitably ask how well reality is being approximated. As previously indicated, most of the models were either empirically derived or calibrated based on metered data so model accuracy should be acceptable. One part of the tall stack controversy, however, is the fact that several utilities claim that the EPA models are pessimistic and predicted concentration levels

always exceed field measurements. To investigate these claims an attempt was made to compare model results to field measurements.

Model Accuracy Analysis Methodology. Throughout this study, questions have been raised concerning the validity of mathematical dispersion models. Although the EPA recommended models used in this study are based on comprehensive field testing, several utilities (particularly AEP) have indicated that the models have a tendency to over-estimate concentrations. In attempting to answer questions concerning model accuracy, it became apparent that very little high quality metered data has been published.

Although significant amounts of raw data are frequently available, the data is usually accompanied with little or no anlaysis. A good case in point is the Large Power Plant Effluent Study (LAPPES) initiated in 1967 by the National Air Pollution Control Administration (now EPA -Office of Air Quality)[23,24]. One of the primary objectives of the LAPPES study was to compare observed data with calculated predictions. The study is of particular interest since the pollution source is the largest complex of coal-burning, mine-mouth, power generating stations in the U.S. The complex consists of three plants (total capacity = 4800 MW), Keystone, Homer City, and Conemaugh each equipped with tall stacks (stack height varies from 244 to 305 meters). Located 80 miles from Pittsburgh, Pennsylvania on a NE-SW line 39 Km long, the group of plants is called the Chestnut Ridge complex. Although the raw data volumes[23] are available, very little information concerning analysis of the basic data has been published. Although analysis of the basic data is still planned by EPA, it apparently has been assigned a relatively low priority. Discussions with engineers at Pennsylvania Electric Company, indicate that the data gathered between 1967 and June, 1974 is too incomplete to reach significant conclusions concerning emissions behavior. The problem appears to have been a combination of experiment design and instrument accuracy. According to Pennsylvania Electric engineers, data collected since June, 1974 is substantially more accurate and complete; however, no published informaton is available. They also noted that, based on data collected since June, 1974, actual surface concentrations on elevated terrain are less than values predicted by mathematical dispersion models. Any future analysis of emissions from large fossil energy parks should make maximum use of information concerning the Chestnut Ridge complex both to provide insights concerning environmental impacts and to calibrate mathematical models of energy parks.

Another large complex of coal power generation is located in the upper Ohio River Valley. These plants, part of the AEP system, were either originally built with tall stacks or have been retro-fitted with them. In their continuing argument with EPA concerning tall stacks and supplementary control systems, AEP has published several articles concerning ambient air quality in the vicinity of the Cardinal and Tidd plants[25,26]. Since the AEP documentation includes statistical summaries of substantial amounts of metered data, the decision was made to utilize the Cardinal - Tidd data to investigate the validity of alternative dispersion models. The characteristics of the Cardinal and Tidd plants are summarized below:

	Cardinal Plant	Tidd Plant
Plant Capacity =	1180 MW	222.2 MW
Heat Rate =	9,087 Btu/Kwh	11,809 Btu/Kwh
No. of Stacks =	2	3
Stack Height =	825 feet (251.5m)	247 feet (75.3m)
Coal Consumption =	3.02×10^6 Tons/year	$.58 \times 10^6$ Tons/year
Coal Heat Content =	11,349 Btu/lb	11,761 Btu/lb
Sulfur Content =	2.98%	2.94%
Annual SO_2 Emissions =	176,400 Tons	33,480 Tons

By considering the alternative dispersion models previously discussed and the above plant characteristics, it was possible to determine how well the various estimates compared with each other and metered data. The comparison was based on predicted and measured maximum concentration levels. Although concentration levels substantially lower than these maximum levels occur more frequently, the maximum concentration levels determine compliance with federal regulations.

Short Term Concentration Levels Predicted By EPA and TVA Models. The variation of ground level concentration with distance from the source (Cardinal-Tidd plants) is shown in Figures 1/2.7-8 and 1/2.7-9. Results presented in Figure 1/2.7-8 are based on EPA's point source PTMTP model which is a coning model with a limited mixing layer. As indicated in Figure 1/2.7-8, maximum ground level concentrations were calculated for two stability conditions, highly unstable (Stability class A) and slightly unstable (Stability class C). Although these stability conditions occur relatively infrequently, they do produce maximum ground level concentrations. Of particular significance in Figure 1/2.7-8 is the fact that maximum concentrations associated with the Tidd and Cardinal plants are approximately equal. This is true in spite of the substantial difference in generating capacities, 222 MW versus 1180 MW.

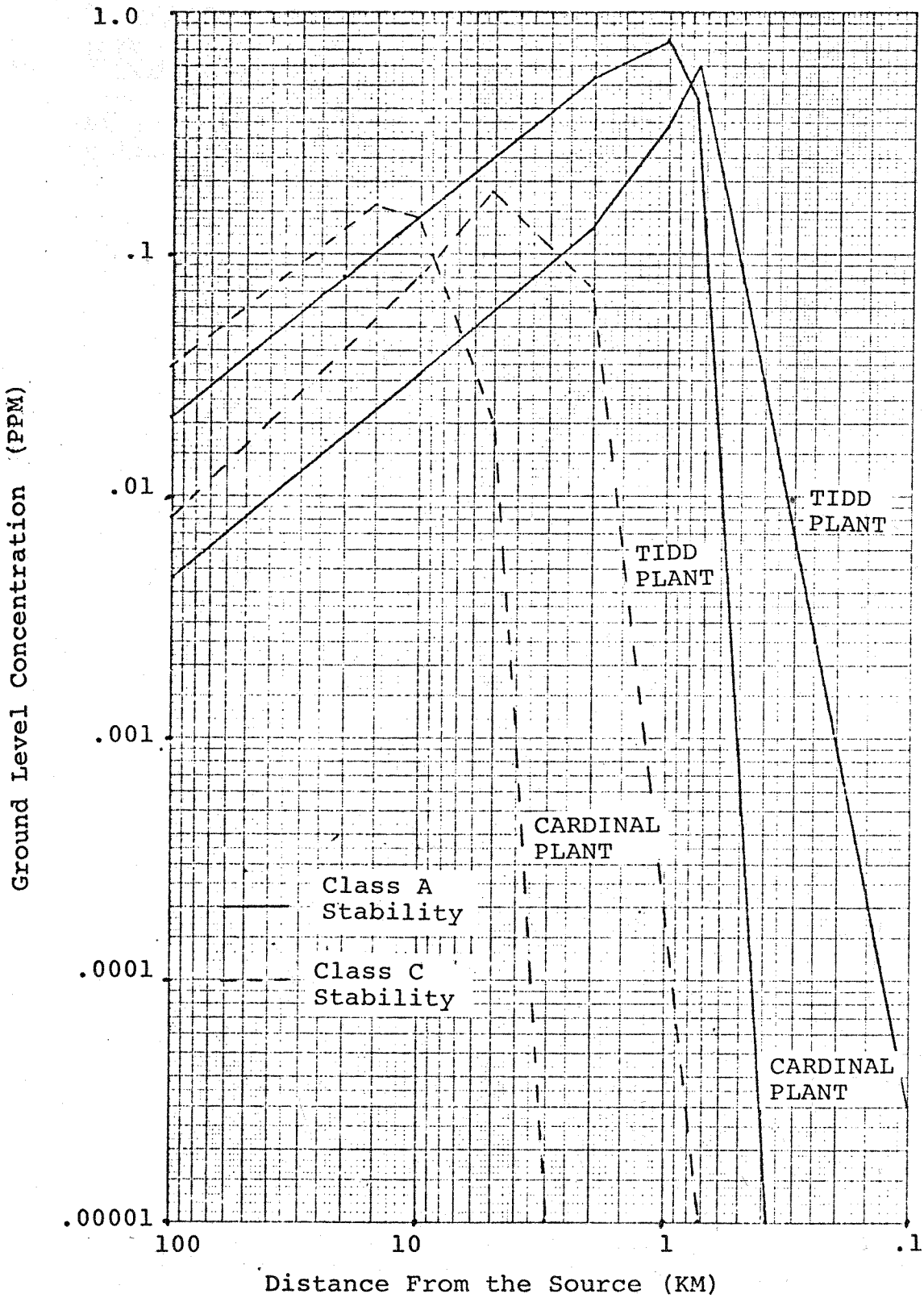

FIGURE 1/2.7-8 Short Term Concentrations in the Vicinity of AEP's Cardinal Plant Based on EPA Models

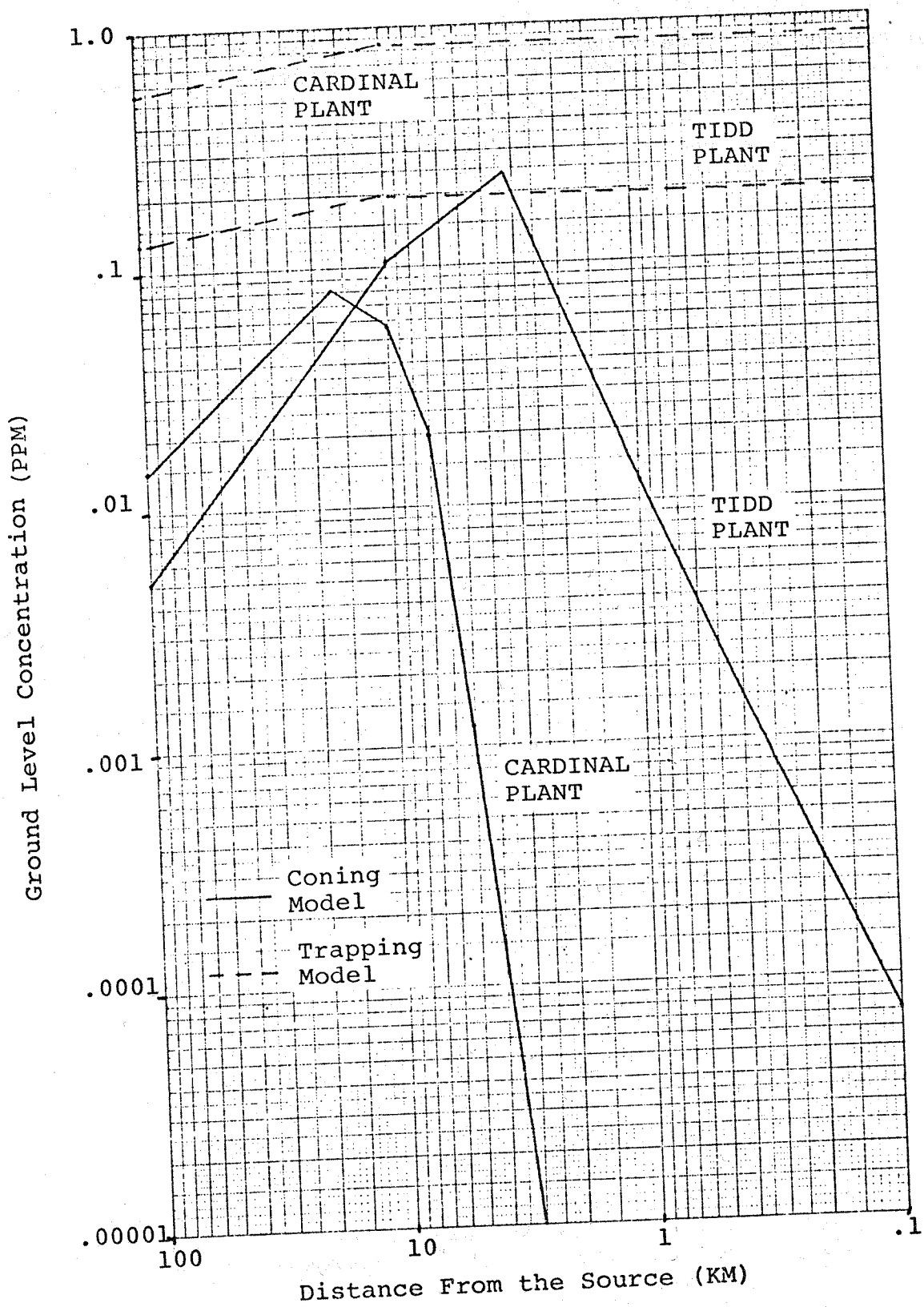

FIGURE 1/2.7-9 Short Term Concentrations in the Vicinity of AEP's Cardinal Plant Based on TVA Models

The reason for this behavior is the fact that the larger Cardinal plant has an 825 foot stack compared to 247 feet for the Tidd plant. Results presented in Figure 1/2.7-9 are based on TVA's coning and trapping models. Note that trapping model maximum concentrations are substantially higher than the coning model concentrations for the Cardinal plant (large plant with tall stack) but approximately the same for the Tidd plant (small plant with short stack). These results are substantiated by TVA's experience which indicates that maximum concentrations for alternate plume dispersion models are approximately equal for small plants but the trapping dispersion model is more prominent for larger plants with tall stacks. The TVA coning model results presented in Figure 1/2.7-9 are based on neutral stability conditions (Stability class D) recommended by TVA. It is interesting to note that concentrations based on the EPA PTMTP model with Stability class A are of the same order of magnitude as the concentrations based on TVA's trapping model.

Concentration As A Function of Sampling Time. Before maximum ground level concentration estimates based on mathematical models can be compared to actual metered data, it is necessary to assure that all concentrations are based on the same averaging time interval or sampling time. The results presented in Figures 1/2.7-8 and 1/2.7-9 are based on short time intervals, 3-15 minutes. However, ambient air quality standards are specified for longer sampling times; e.g., 1 hour, 3 hours, 24 hours, one year. As recommended by EPA, estimates of concentrations for sampling times less than 24 hours can be obtained via the following relationship:

$$\chi_s = \chi_k \left(\frac{t_k}{t_s} \right)^P$$

where χ_k = Concentration estimate for short sampling time t_k (t_k = 3-15 minutes)

χ_s = Concentration estimate for the longer sampling time t_s (t_s = 1-24 hours, expressed in minutes)

P = 0.17-0.20

The above power law is based on the fact that concentrations downwind from a source decrease with sampling time because of a larger σ_y due to increased meander of wind direction. The averaging time correction factors recommended by TVA are 1/2, 1/3, and 1/10 for averaging times of 1 hour, 3 hours, and 24 hours respectively. Although they are not expresssed

in terms of a power law, the TVA averaging time correction factors can be approximated using the power law with t_k = 1 minute and P = .20.

In order to investigate the validity of the time averaging correction factors, the TVA and EPA recommended factors were compared to metered data. Since the metered data available[25,26] were based on 1 and 24 hour sampling times, the comparison was accomplished by calculating the ratio of the 24 hour average concentration to the one hour concentration. As indicated in the lower portion of Table 1/2.7-4, the TVA recommended procedure compares quite well with metered data while the EPA recommended procedure is substantially different. These results are probably explained by the fact that the TVA correction factors are based on field tests at coal-burning power plants as large as those in the AEP system. The EPA power law, based on substantially smaller emission sources with shorter stack heights, is substantially more conservative than either the TVA correction procedure or metered data. Comparison of the TVA and EPA correction factors in Table 1/2.7-4 indicates that the EPA factors decrease less rapidly with sampling time. The results presented in Section 1/2.7.4.4 for 1 hour and 24 hour time intervals are based on EPA's PTMTP model and the EPA power law (P = .20, t_k = 15 minutes). The EPA power law was used because of its conservative nature and the uncertainties involved in applying correction factors. For example, the TVA correction factors are based on TVA power plants and local meteorological conditions. Although the TVA correction factors correlate well with AEP metered data, their applicability for other locations and power plants is subject to question.

Comparison of Model Predictions with Metered Data. To accomplish the comparison of alternative dispersion models and investigate their correlation with metered data, it is necessary to correct the short term concentrations shown in Figure 1/2.7-8 and 1/2.7-9 to 1 hour and 24 hour time intervals. To assure model consistency in conducting the comparison, the TVA correction factors were used to adjust TVA short term estimates (Figure 1/2.7-9) and the EPA power law was used to adjust EPA short term estimates (Figure 1/2.7-8). Maximum ground level concentrations in the vicinity of AEP's Cardinal plant, as estimated by the alternate models, are compared in Table 1/2.7-5. The concentrations shown were determined by summing the contributions from the Cardinal and Tidd plants. Metered data is not presented in Table 1/2.7-5 since monitoring was insufficient to accurately locate the overall maximum concentration. Maximum concentrations for a location 7.4 km downwind from the Cardinal plant are presented in Table 1/2.7-6. In this case

TABLE 1/2.7-4

VARIATION OF GROUND LEVEL CONCENTRATION

AS A FUNCTION OF TIME AVERAGE

	Concentration Correction Factor		
Time Period	TVA	EPA #1	EPA #2
3-15 minutes	1	1	1
1 Hour	.5	.55	.76
3 Hour	.33	.44	.61
24 Hour	.1	.29	.40

Values used in the Study

Concentration Ratio	TVA	EPA #1	EPA #2	Ohio Edison Metered Data	AEP Metered Data
$\frac{\text{24 Hour Average}}{\text{1 Hour Average}}$	.2	.53	.53	.22	.28

NOTES:
(1) EPA #1 - Based on the power law with t_k = 3 minutes and p = .20
(2) EPA #2 - Based on the power law with t_k = 15 minutes and p = .20

TABLE 1/2.7-5

MAXIMUM CONCENTRATIONS IN THE VICINITY OF AEP'S CARDINAL PLANT

Dispersion Model/Data Source	Maximum Concentration 24 Hour Averaging Period (PPM)	Maximum Concentration 1 Hour Averaging Period (PPM)
EPA PTMTP Model - A Stability	.45	.86
EPA PTMTP Model - C Stability	.09	.16
TVA Coning Model	.02	.12
TVA Trapping Model (760' Mixing Height)	.10	.52
TVA Trapping Model (1000' Mixing Height)	.06	.30

NOTES: (1) EPA's PTMTP Model is a coning model with a stable layer. Results shown are based on a 1000' mixing height.

MAXIMUM CONCENTRATION 7.4 KM FROM AEP'S CARDINAL PLANT

Dispersion Model/Data Source	Maximum Concentration 24 Hour Averaging Period (PPM)	Maximum Concentration 1 Hour Averaging Period (PPM)
EPA PTMTP Model - A Stability	.09	.17
EPA PTMTP Model - C Stability	.07	.13
TVA Coning Model	.02	.08
TVA Trapping Model	.10	.52
AEP Metered Data #1 Data collected during 1966-1969 time period	.18	.5
AEP Metered Data #1 Adjusted to Ground Level	.08	.23
AEP Metered Data #2 Data collected during major stagnation episode July 19-23, 1972	.006	.22
AEP Metered Data #2 Adjusted to Ground Level	.0028	.10

NOTES:
(1) AEP metered data based on a single monitoring station 7.4 km from the Cardinal plant.
(2) AEP metered data was adjusted to ground level since the monitoring station was located 570' above plant grade
(3) AEP Metered Data #1 obtained from Reference 25.
(4) AEP Metered Data #2 obtained from Reference 26.
(5) EPA's PTMTP Model is a coning model with a stable layer. Results based on a 1000' mixing height.
(6) TVA Trapping model results based on a 760' mixing height.

metered data is also presented since a monitoring station (Station #4) was placed 7.4 km from the source. As indicated, the AEP metered data had to be adjusted to ground level since the monitoring station was located 570' above plant grade.

A review of Table 1/2.7-5 indicates that maximum 1 hour and 24 hour concentrations are predicted by the EPA PTMTP model using Stability class A. If the Tidd plant had been another large Cardinal type plant, trapping model predictions would have been substantially the same as EPA predictions based on Stability class A. The results in Table 1/2.7-5 also indicate that concentrations for more common meteorological conditions are substantially lower than the worst case estimates; i.e., compare TVA coning model and EPA Stability class C results to the other estimates.

Emission concentration estimates based on mathematical models are compared to metered data in Table 1/2.7-6. Actually two sets of metered data are presented. The first set is based on data collected during the 1966-1969 time period[25]. The .18 and .5 ppm values shown in Table 1/2.7-6, 24 hour and 1 hour averages respectively, are not actully absolute maximum values since they were taken from cumulative distribution functions. For example, Figure 1/2.7-10 taken from Reference 25 shows the distribution of hourly mean concentrations at Station #4 (7.4 km from the source) for each of the four years. The .5 ppm concentration level shown in Figure 1/2.7-10 is exceeded less than .1% of the time. Although this .5ppm concentration level is not necessarily the absolute maximum concentration it was used as such in Table 1/2.7-6. This approach was necessary since the TVA documentation did not explicitly identify absolute maximum concentration levels. Figure 1/2.7-10 demonstrates a point made earlier: average 1 hour concentrations are more than an order of magnitude less than maximum values. The second set of metered data in Table 1/2.7-6 is based on data gathered at Station #4 during a major stagnation episode, July 19-23, 1972[26]. This second set of data is surprising in that the concentration levels are substantially less than those in the first set. As previously indicated, maximum concentration levels frequently occur during stagnation conditions when effluents are trapped by a stable inversion layer. The relatively low concentration levels shown in Table 1/2.7-6 for the July 19-23, 1972 stagnation episode could be explained by either a very high inversion layer or by a very low layer with some plume punch through or capturing by the stable layer. Review of Table 1/2.7-6 indicates relatively good correlation between absolute maximum concentrations predicted by the models and the first set of metered data. It should be recognized that the

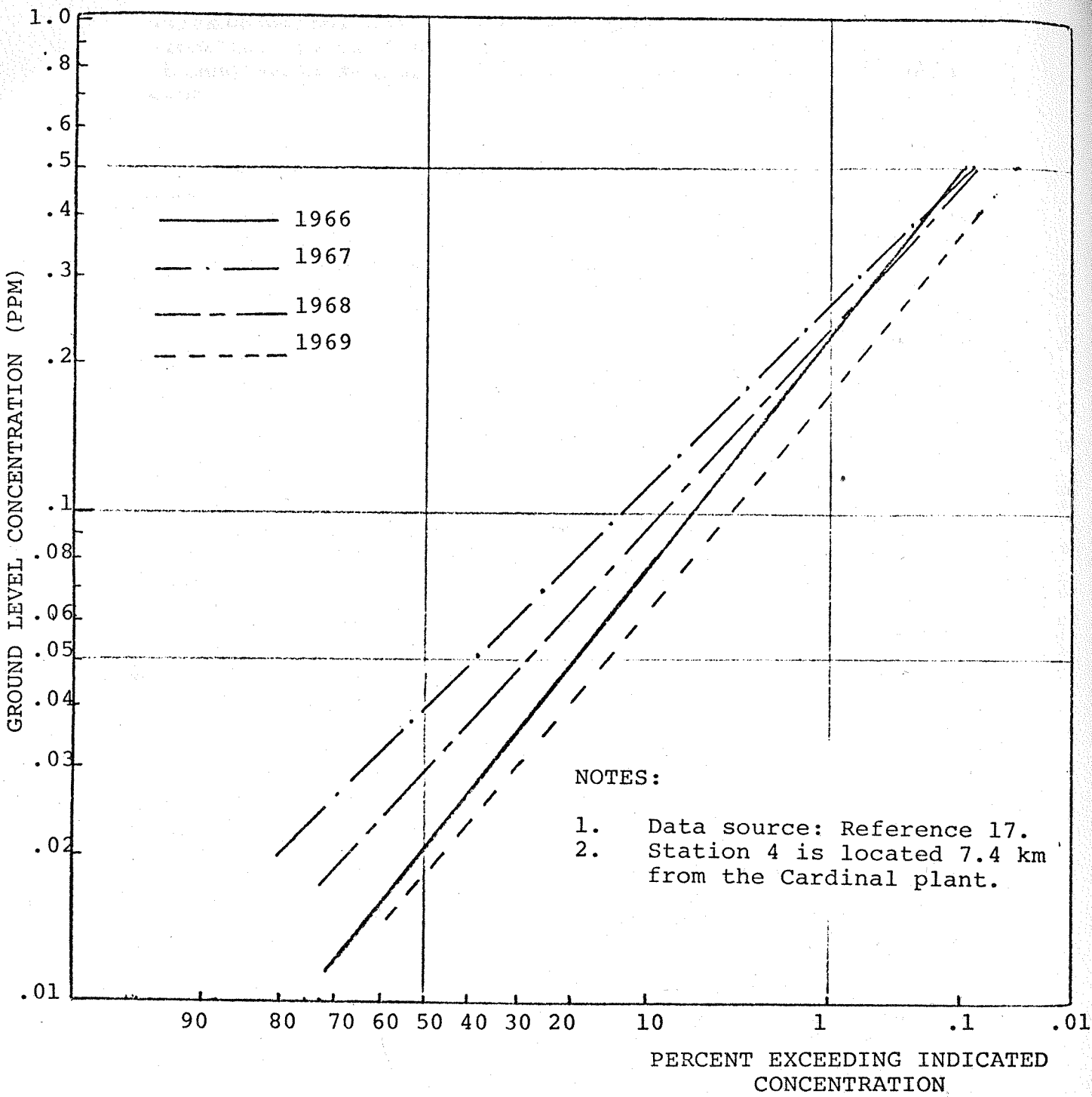

FIGURE 1/2.7-10 Cumulative Distribution of Ground Level Concentrations (1 Hour Average) Measured At AEP's Station 4

concentration levels predicted by the models are based exclusively on the Cardinal and Tidd plants whereas, the metered data includes some level of background emissions from other sources.

Based on this evaluation of mathematical models and comparison with metered data, the decision was made to use the EPA PTMTP model for the analysis of short term emissions from coal fired energy parks. Since PTMTP is a hybrid coning/trapping model it is useful in determining both maximum concentrations and the more frequent lower level concentrations. Because of the lack of metered data it is difficult to reach significant conclusions concerning model accuracy. However, this analysis indicates that estimation errors that do occur tend to be on the high side; i.e., the models over-estimate concentrations.

1/2.7.4.3 SENSITIVITY ANALYSIS TO IDENTIFY CRITICAL PARAMETERS

Introduction. There are a number of factors that can affect the short term ground level concentration of SO_2 near a power plant. The purpose of this analysis is to identify the critical input parameters or those which have the greatest effect on the maximum short term ground level concentration.

Analysis. The sensitivity analysis was conducted by observing the behavior of maximum 15 minute ground level concentration of SO_2, as determined by the EPA dispersion model "PTMTP" discussed in Section 1/2.7.4.2. Variations in the value of this concentration are determined as a function of the following parameters:

- Stability class
- Wind speed
- Mixing Height
- Exhaust gas temperature
- Stack height
- Volume flow
- Multiple factors

Base Conditions. As a starting point for the analysis we assumed a basic dispersed site power plant consisting of two units, each having the following characteristics:

Unit rating	1320 MW
Heat rate	8970 BTU/KWH
Stack height	800 ft. (244 m.)
Stack diameter	37 ft. (11.3 m.)
Exhaust velocity	46.5 ft/sec. (14.2 m/sec)
Exhaust temperatures	250°F (394°K)

The basic meteorological conditions used were:

- Ambient air temperature 68°F (293°K)
- Mixing height 3280 ft. (1000 m.)
- Wind speed 16.4 ft/sec. (5 m/sec)

Each unit was assumed to be emitting SO_2 at the maximum allowable rate, as specified in the national emission standards for fossil plants, of 1.2 lbs. of SO_2 per million BTU's input. For the units under consideration this is equivalent to an emission rate of 1790 g SO_2/sec. The relationship between heating value and % sulfur content of the coal and the scrubber efficiency necessary to meet the emission standards is shown in Figure 1/2.7-11. For example, for eastern coal with a heating value of 12000 BTU/lb and 3.5% sulfur content a scrubber efficiency of almost 80% is necessary to meet the national emission standards.

For the purpose of this analysis it was assumed that there was no interaction between the plumes of the two units. Any interaction would tend to reduce the maximum concentration, so that, if anything, our numbers will be slightly higher than they should be. The effect of plume interaction is examined more extensively in Section 1/2.7.4.4 where the energy park is considered.

Since the two units are generally only 50 to 100 meters apart, we treated them as a single point source emitting SO_2 at a rate of 3580g/sec. Since the maximum ground level concentrations occur at least a kilometer or more from the source, combining the units has a negligible effect on the final answer.

Sensitivity Analysis

- Stability Class

All meteorological conditions can be classified under one of six different stability classes. Class one is the most unstable condition and class 6 is the most stable, with the other classes falling in between. Figure 1/2.7-12 shows the 15 minute ground level concentrations versus the downwind distance from the point source as a function of the first five stability classes. Class 6 caused concentrations so low that they do not appear on this graph. As can be seen, class 1 caused a maximum concentration at least 3 times larger than the concentration occurring under any other class. This is due to the fact that under stability class 1 conditions the plume expands to ground level much faster than under other conditions. This also explains why

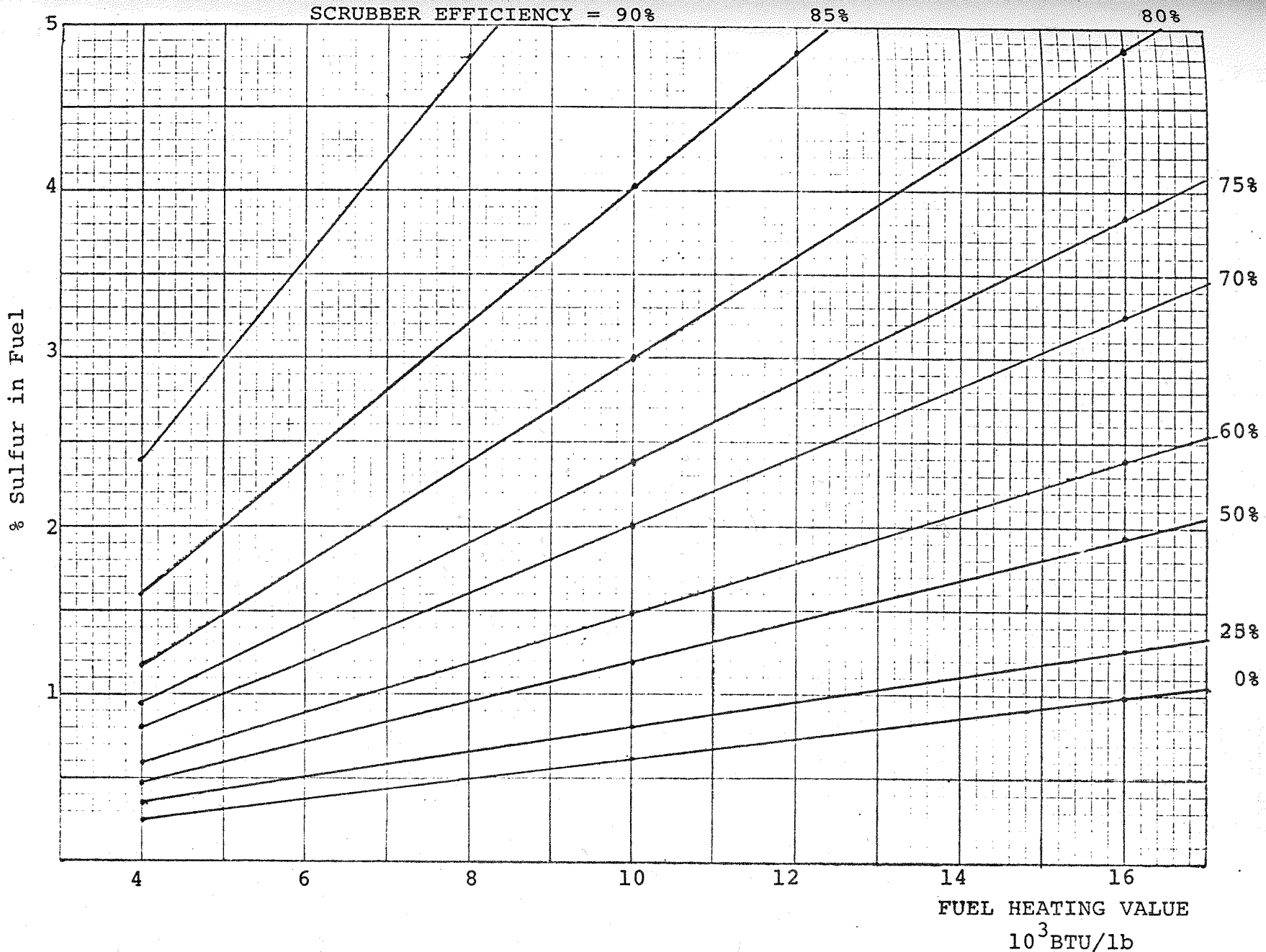

FIGURE 1/2.7-11 Minimum Values Needed to Meet Emission Standards

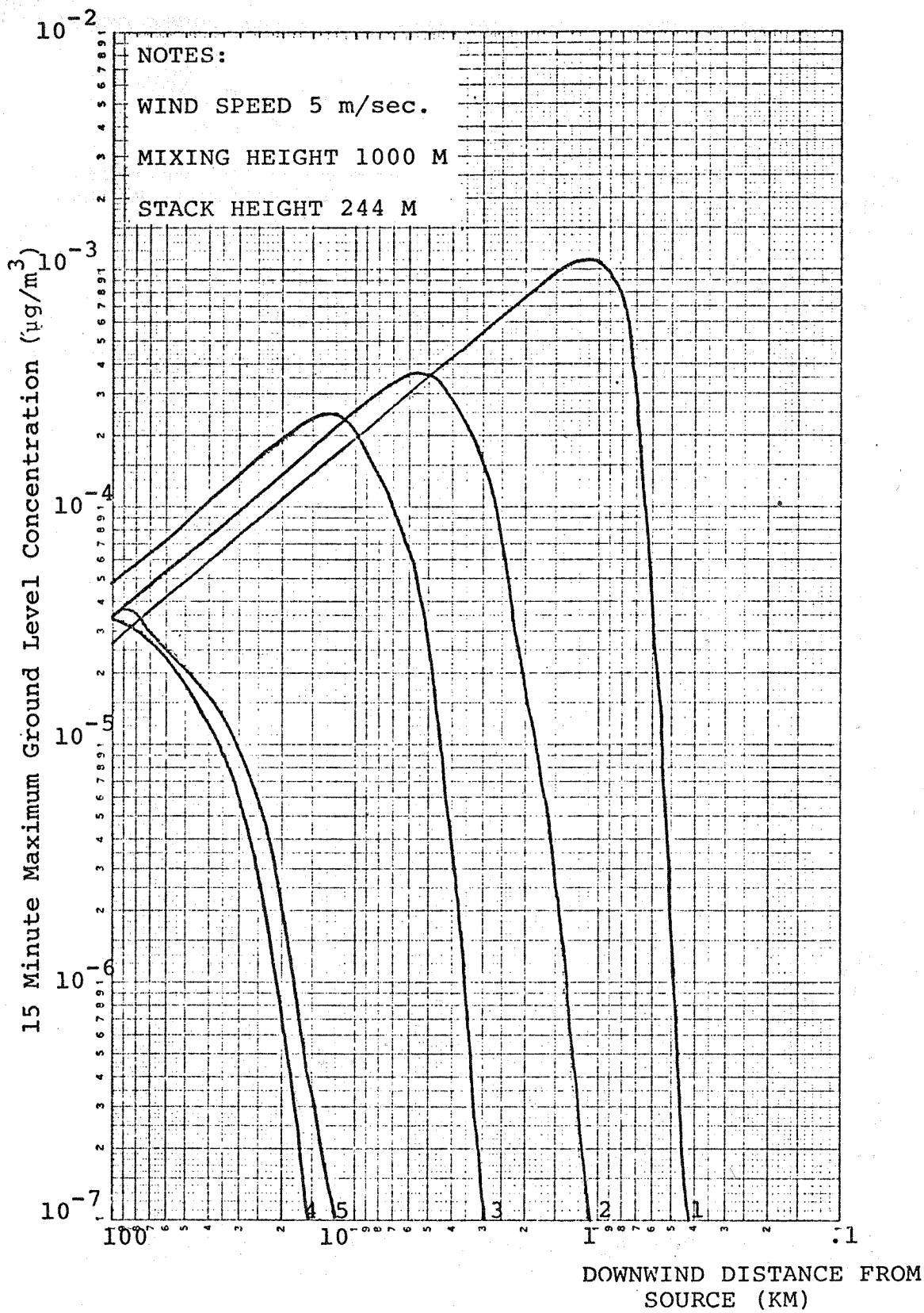

FIGURE 1/2.7-12 Effect of Varying Stability Class

the peak occurs much closer to the source than under other conditions.

- Wind Speed

The wind velocity at the plume height also has a great effect upon ground level concentration. Figure 1/2.7-13 shows the ground level concentrations versus downwind distance from the source for wind speeds of 5 and 10 m/sec. A wind speed of 1 m/sec resulted in no ground level concentrations. It can be noted, therefore, that the maximum concentration does not occur at either very high or very low wind velocities, but rather at an intermediate velocity of about 5 m/sec. This can be easily understood if we examine the processes involved. At very low wind speeds the plume has almost no tendency to bend over and thereby cause the pollution to eventually reach the ground. Rather, the plume rises high into the atmosphere and is so completely dispersed so that its eventual effect at ground level is negligible. For very high wind velocities, plume rise is reduced and emissions are dispersed in the horizontal direction resulting in lower ground level concentrations. This is especially true when tall stacks are utilized. It is in between these two extremes that the maximum concentration as a function of wind speed is found. The plume has lost the ability to rise to great heights, as in the low wind velocity case, and is not yet able to disperse rapidly in the horizontal direction as it could with higher wind speeds.

- Mixing Height

The mixing height, or trapping layer, is a condition which can exist in the atmosphere which acts as a boundary to the dispersion of pollution. In some cases this is helpful, but most of the time it causes an increase in ground level concentration. Figure 1/2.7-14 shows the ground level concentrations versus downwind distance from the source for mixing heights of 800, 1000 and 1200 m. Although the maximum concentration increases on this graph as the mixing height decreases, for a mixing height of 700 m there was no resultant ground level concentration. If the mixing height is low enough the plume still has enough bouyancy to penetrate the layer so that all of the pollution is trapped above the mixing height and there is no ground level concentrations of pollutants. However, if the plume no longer has sufficient bouyancy to penetrate the layer then the trapping layer acts as a lid to the dispersion of pollutants. Since there is now less room in which to distribute the pollution, it follows that the ground level concentrations must increase. Therefore, if penetration

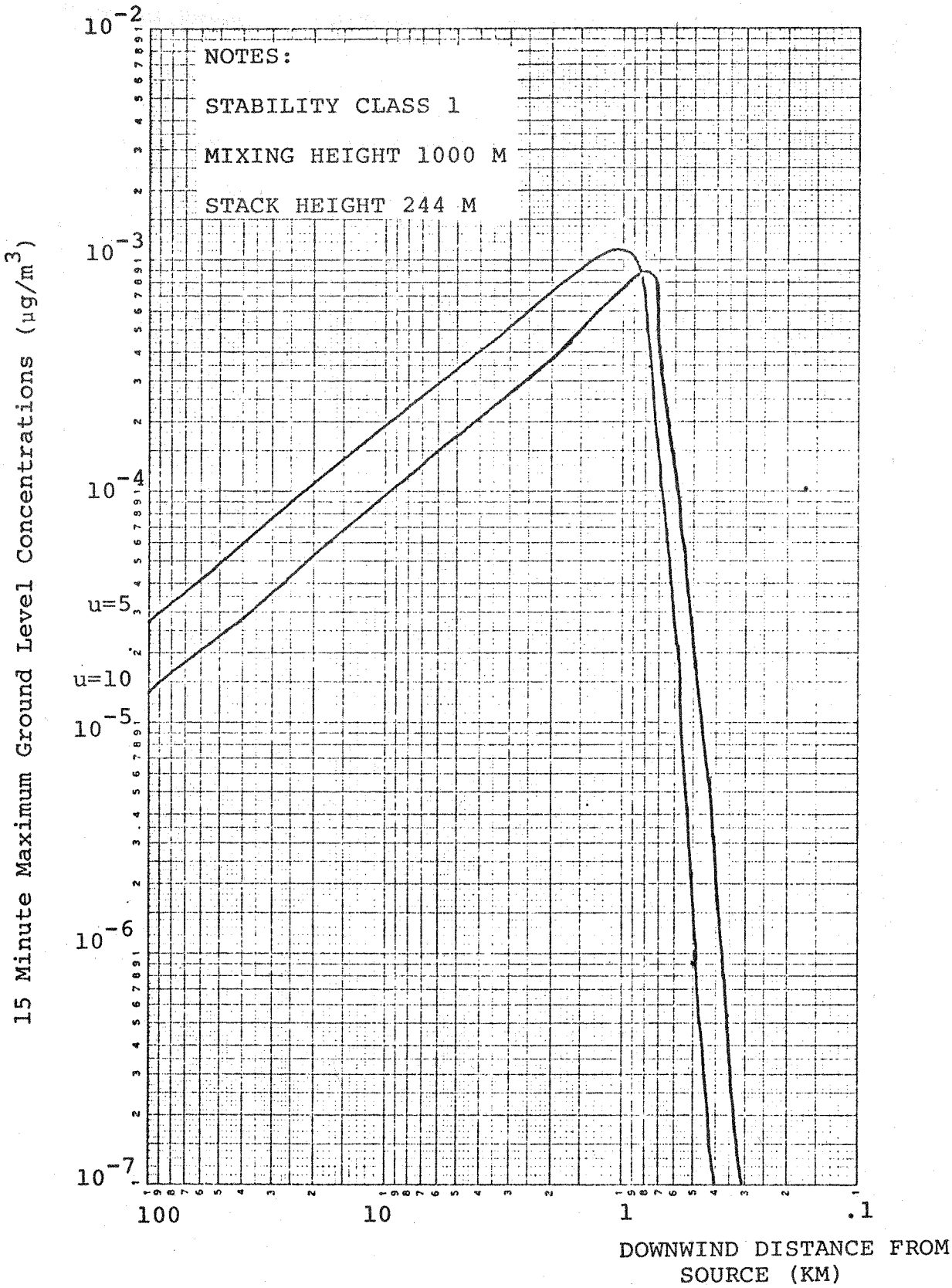

FIGURE 1/2.7-13 Effect of Varying Wind Speed

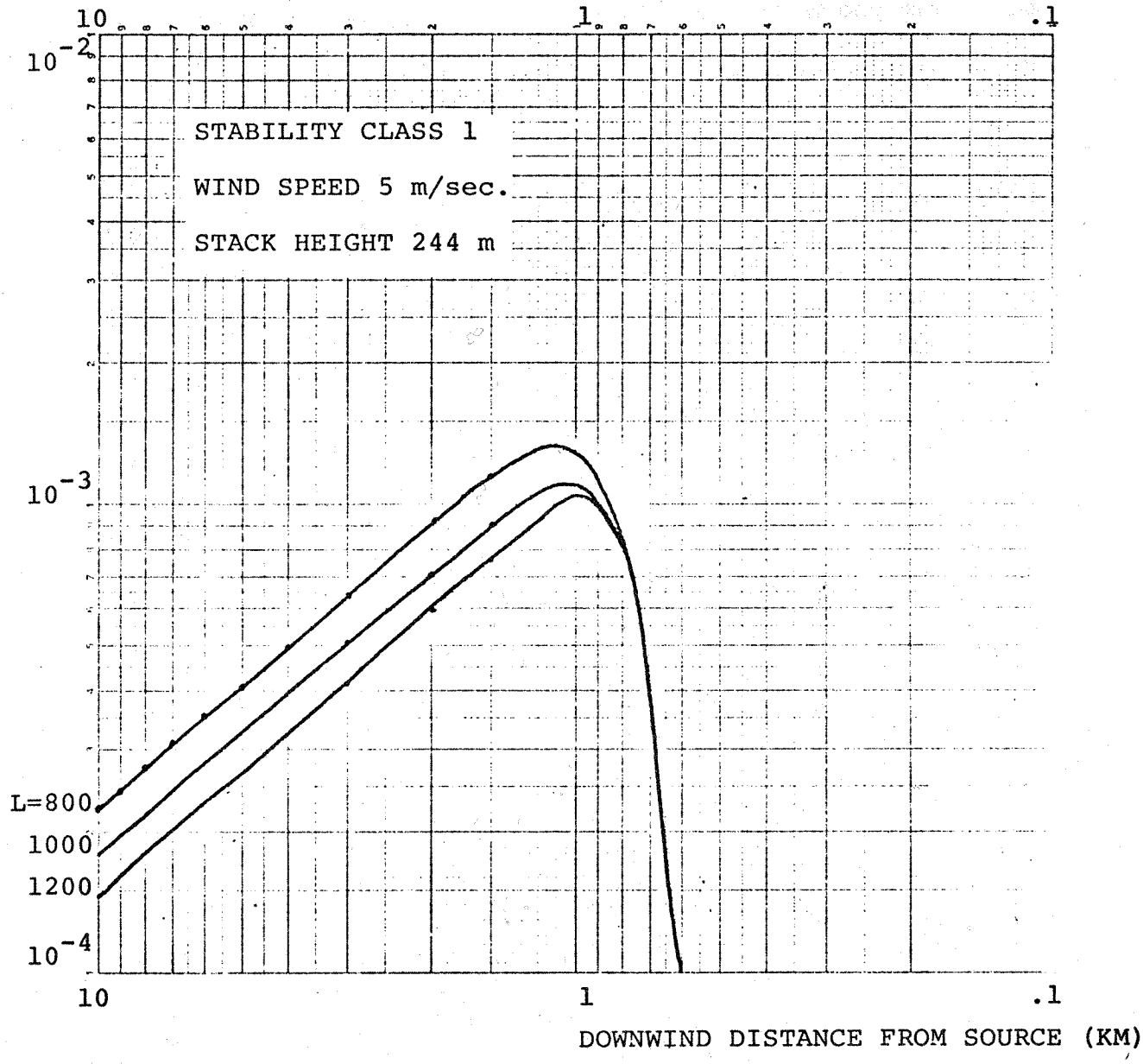

FIGURE 1/2.7-14 Effect of Varying Mixing Height

does not take place, then the higher the mixing layer the more room there is for dispersion and ground level concentrations decrease. The curves shown in Figure 1/2.7-14 demonstrate this behavior.

- Exhaust Gas Temperature

The temperature of the gas as it exits the stack is one of the factors that determines the plume rise beyond the top of the stack. However, once the gas is about 100°C more than the ambient temperature any increase in gas temperature causes only a slight decrease in maximum ground level concentration, as seen in Figure 1/2.7-15. The temperature factor involved in computing the plume rise is $(T_s - T_a)/T_s$ where T_a is the ambient air temperature and T_s is the stack gas temperature. Since this term rapidly levels off as T_s increases, its effect on the plume rise also levels off so that only slight changes are seen in the maximum ground level concentration.

- Stack Height

Stack height is an important factor in determining the maximum ground level concentration. Simply stated, increasing stack height will reduce the maximum ground level concentration. This is due to the basic fact that the higher the pollution is when it is emitted, the more it will disperse before it finally returns to ground level. This effect can be seen in Figure 1/2.7-16 where the ground level concentration is plotted versus downwind distance from the source for stack heights of 400, 800, and 1200 feet. Beyond a few kilometers from the source there is no difference in concentrations, due to the effect of the trapping layer, but there is a sizable difference in the maximum concentrations from the different stacks. Figure 1/2.7-17 shows the maximum ground level concentration for stack heights varying from 0 to 1200 feet. As can be seen, the increase in benefits with increasing stack height rapidly diminishes after 800 feet, and is virtually non-existant beyond 1200 feet. The exception to this is when the added stack height sufficiently raises the plume so that the trapping layer is penetrated and none of the pollutants reach the ground.

- Volume Flow

The volume flow of the gas, as used in this section, is simply defined as the area of the stack times the velocity of the exhaust gas. The greater the volume flow is, the higher the plume will rise before it is bent over by the wind. Therefore, higher volume flows cause a decrease in the maximum ground level concentration. In Figure 1/2.7-18

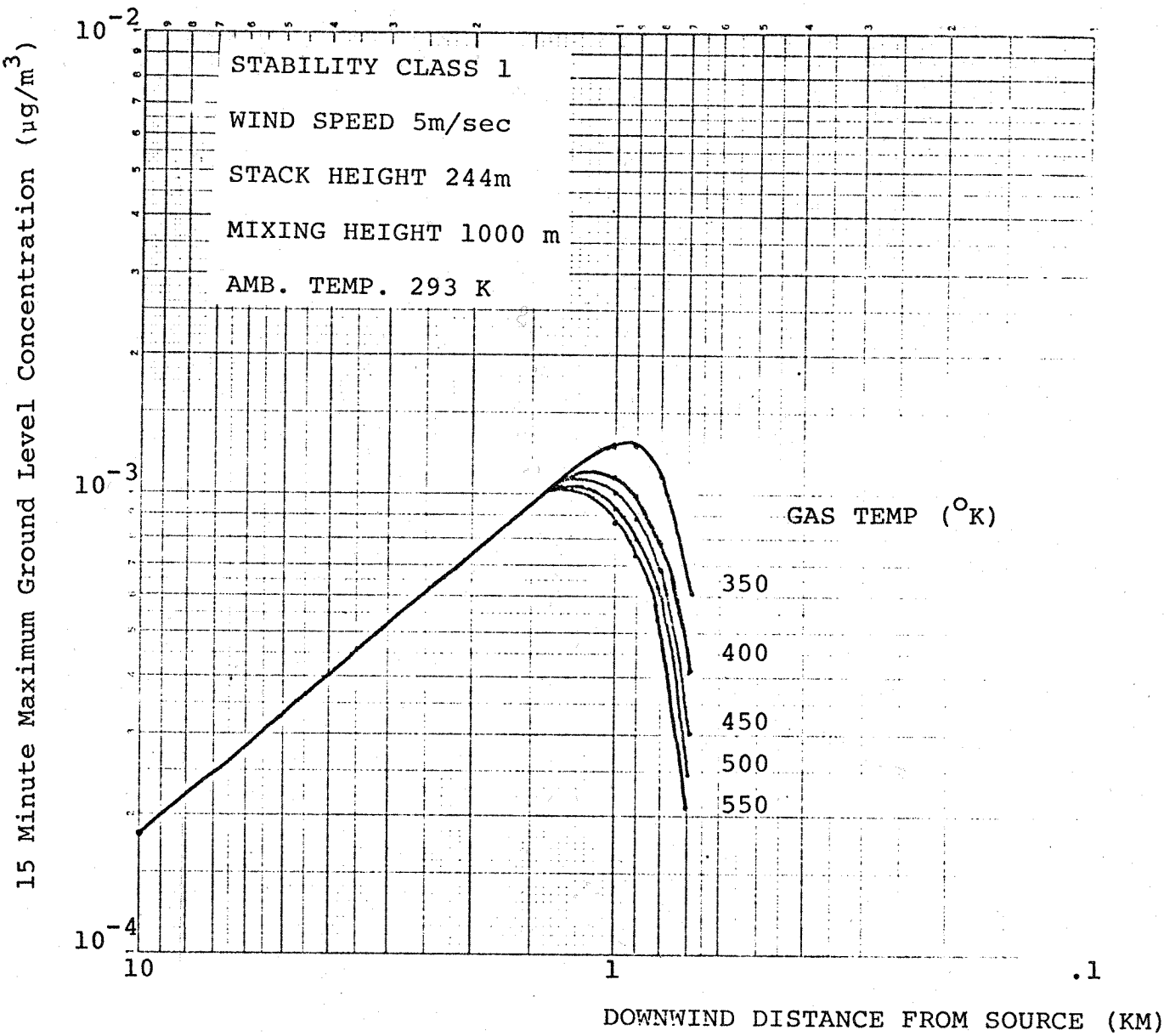

FIGURE 1/2.7-15 Effect of Varying Stack Gas Temperature

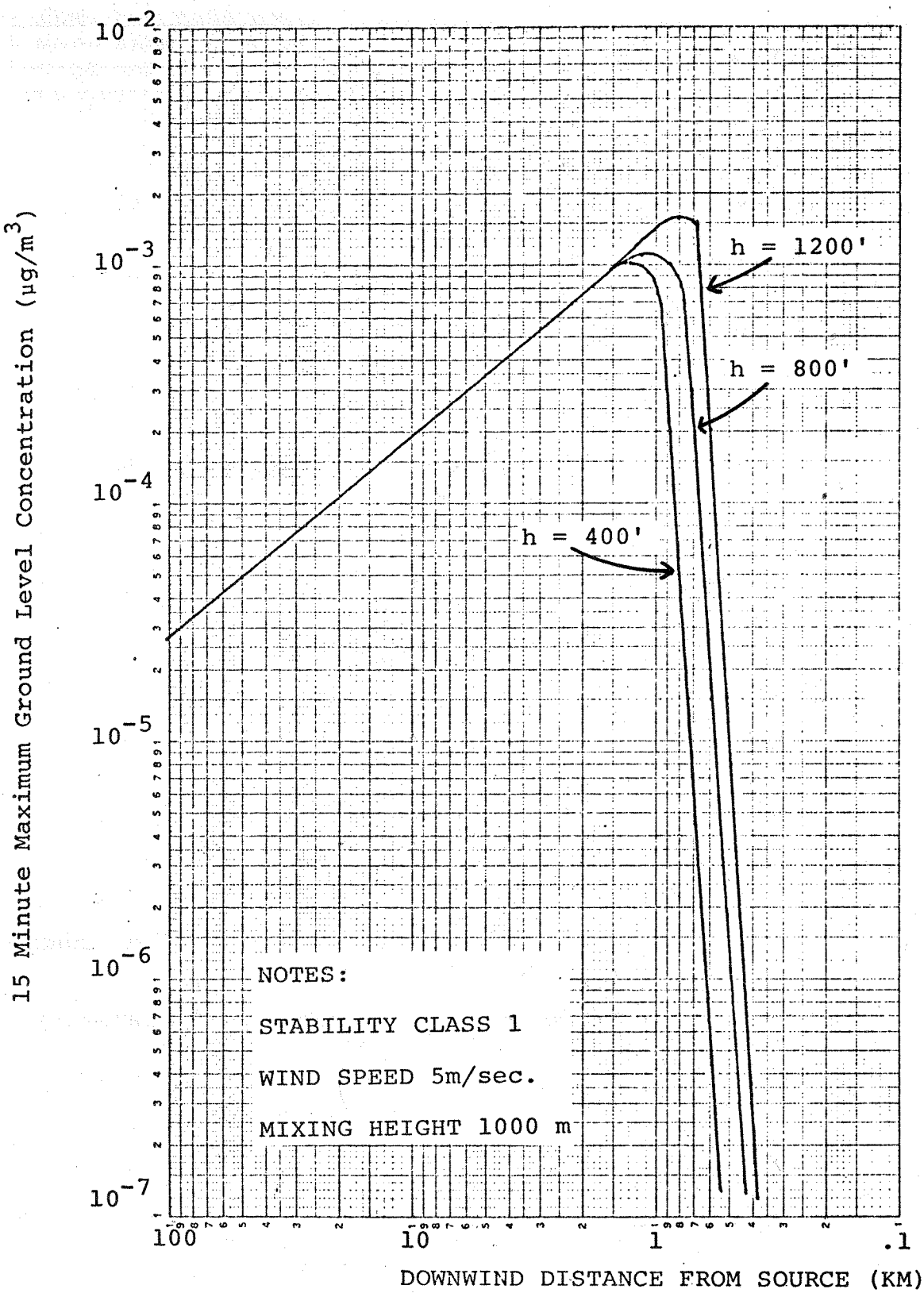

FIGURE 1/2.7-16 Effect of Varying Stack Height

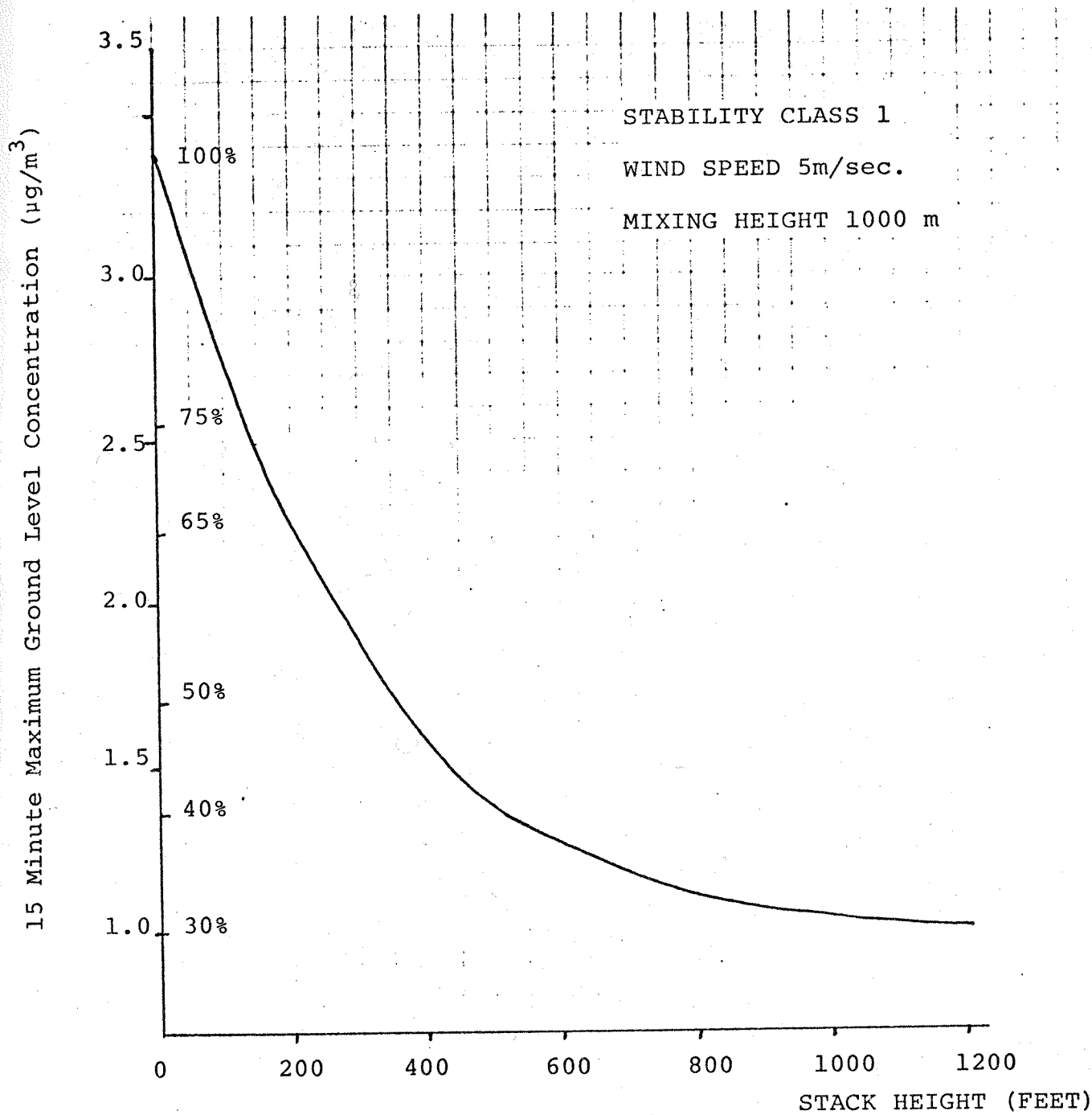

FIGURE 1/2.7-17 Effect of Varying Stack Height

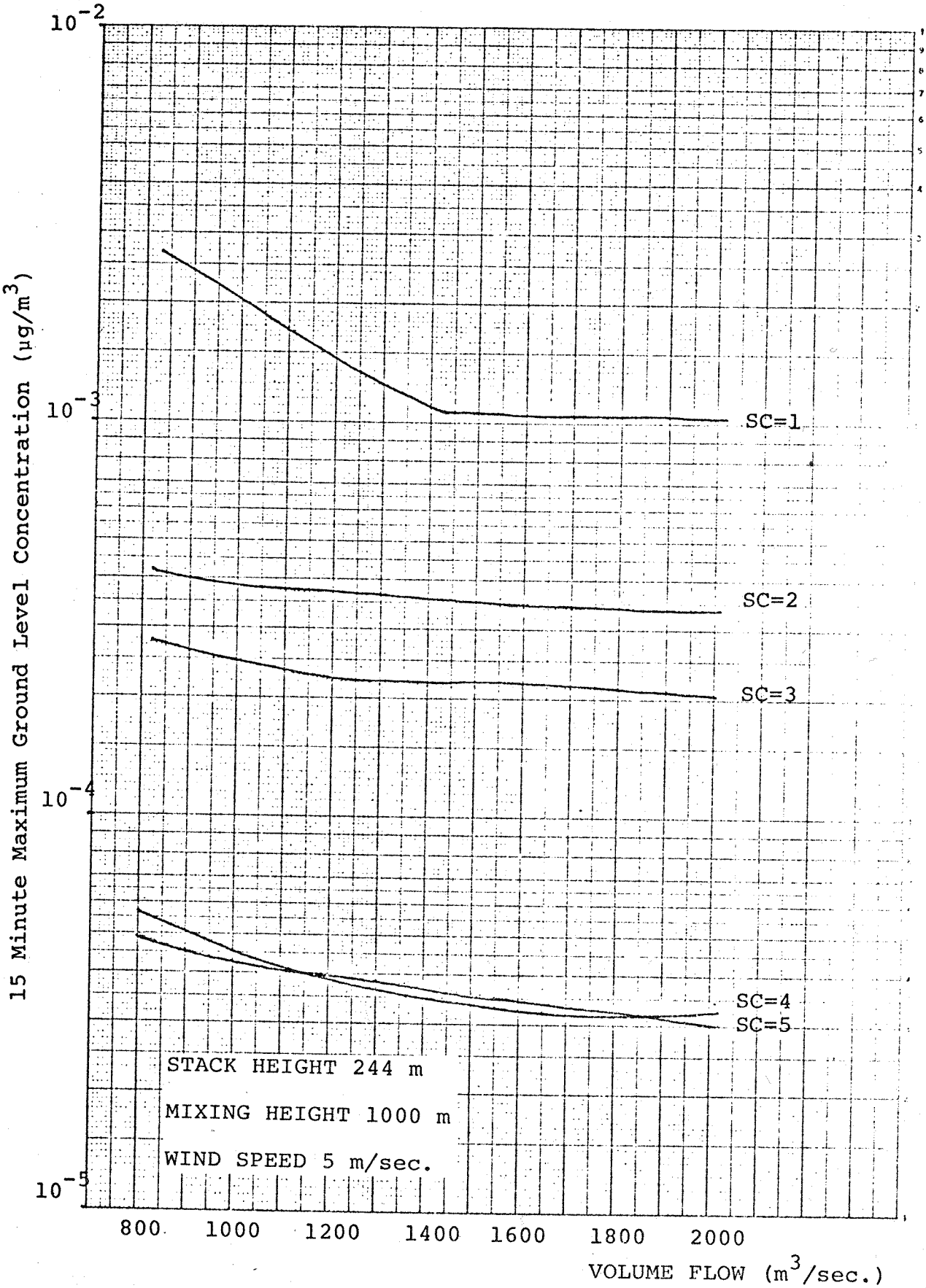

FIGURE 1/2.7-18 Effect of Varying Volume Flow and Stability Class

we can see that the impact of changing volume flow varies for different stability classes. There is a large change in concentrations for stability class 1 up to 1400 m^3/sec. The leveling off after this point is due to the mixing height, which is acting as a barrier to increased plume rise. The effect of volume flow is less drastic for the remaining stability classes. This is because the maximum concentrations for these conditions occur far enough away from the source that the dominating factor is the mixing height rather than the volume flow. However, increasing volume flow still causes a slight decrease in the maximum concentration. From a technical point of view, increased volume flow could be accomplished by increasing the stack's forced draft with additional fan horsepower.

- Multiple Factors

Figure 1/2.7-19 shows the combined effects on 15 minute maximum ground level concentrations of varying stability class, mixing height and stack height. One point which is easily seen from these graphs is that the effect of increasing the stack height is largely dependent upon the stability class and the mixing height. Since these two factors vary throughout the year it is hard to say exactly how much increasing stack height will help reduce maximum ground level concentrations. However, the maximum concentration never increases with taller stacks. It should also be noted that for stability classes 2 and 3 with a mixing height of 800 m, increasing the stack height from 800 to 1000 feet allowed the plume to penetrate the trapping layer so that there was no resultant ground level concentration.

Meteorological data, in addition to being classified in one of the six stabiliy classes, is usually further classified as belonging to one of six different wind speed classes. The mean wind speed for each of these classes is about 1.5, 2.5, 4.5, 7.0, 9.6, and 12.5 m/sec. The final step of the sensitivity analysis was to determine the maximum ground level concentrations resulting from each of the 36 possible combinations of stability class and wind class. Since the short term national ambient air quality standards are specified in terms of 3 and 24 hour concentrations, maximum 15 minute concentrations determined by the PTMTP dispersion program were converted to these time periods.

The following equation, recommended by EPA and discussed in Section 1/2.7.4.2, was used to convert from 15 minute time averages to 3 hours and 24 hours:

$$\chi_s = \chi_{15} \left(\frac{15}{t_s} \right)^{.2}$$

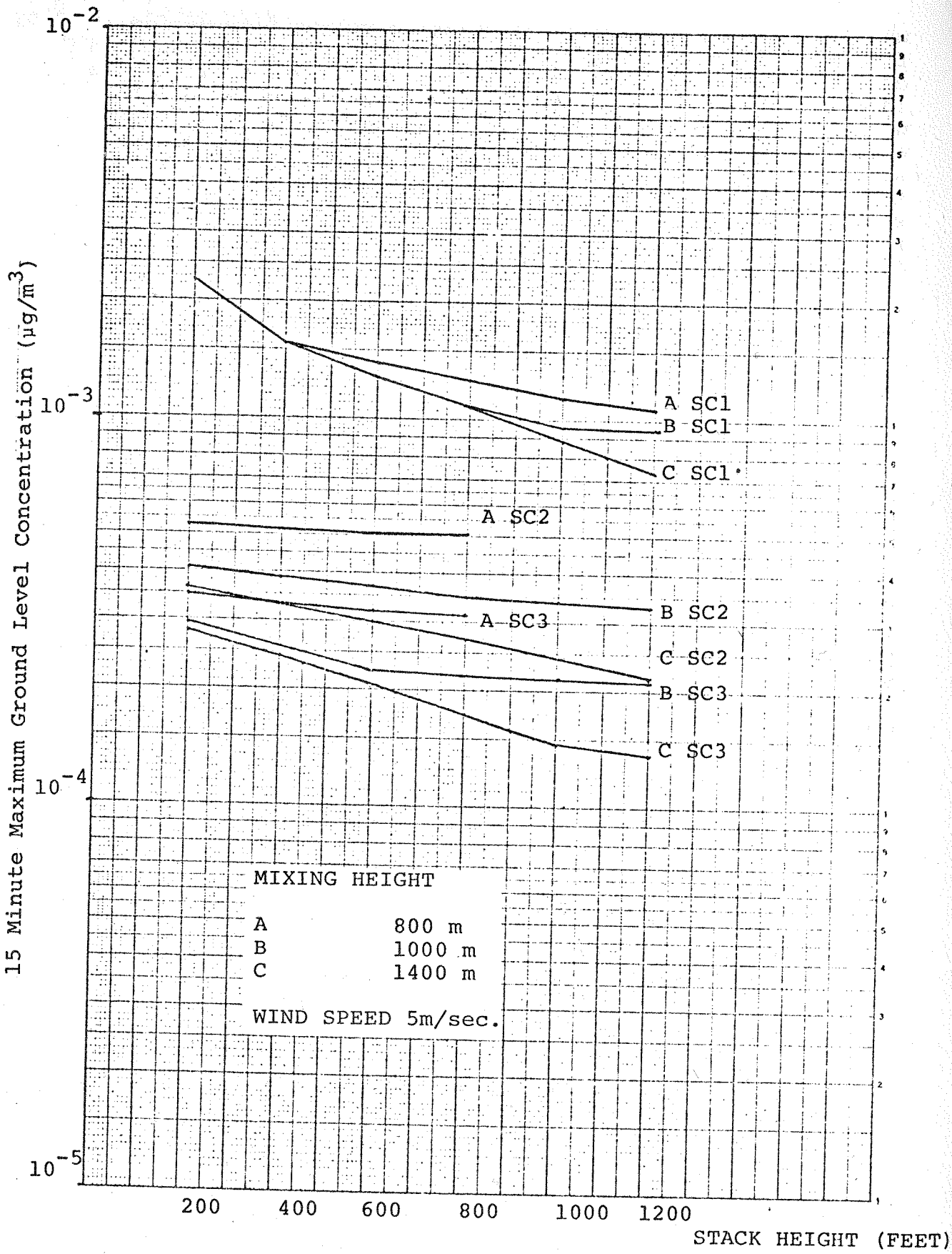

FIGURE 1/2.7-19 Effect of Varying Stack Height, Stability Class and Mixing Height

where χ_{15} is the maximum 15 minute average ground level concentration as calculated by the PTMTP Program. χ_s is the maximum average concentration for a longer sampling period t_s (in minutes). Both 3 and 24 hour sampling periods were used in the analysis.

An important thing to consider is how often the 36 different conditions actually occur. Since this is dependent upon the location of the plant we must temporarily lose some of our generality in order to obtain some idea of the likeliness of occurrence of each condition. Meteorological data was obtained for the Rochester, New York area based on 24 measurements per day for a 10 year period. An annual wind rose was then made from this data and is shown in Figure 1/2.7-20. Although this is for a particular site, the general shape of the wind rose is typical of other wind roses which were obtained through the course of the analysis.

In Table 1/2.7-7 is shown the results of this part of the analysis. Given in the table is the maximum average 3 and 24 hour concentrations for each possible condition, and also the average annual % occurrence of each condition. As can be seen, of the 36 possible combinations 15 of them never occurred in this particular area over the 10 year period, and 6 more occurred less than 1% of the time.

In referring to the table we can see that the 3 hour secondary limit (1300 $\mu g/m^3$) was never exceeded, and the primary and secondary 24 hour limits (365 and 260 $\mu g/m^3$ respectively) were only exceeded .2113% of the time, or about 18.5 hours per year. It should be noted that the average annual % occurrence for each condition represents the total of the % occurrences for all possible wind directions. Also, the 24 hour concentration is computed on the assumption that the given condition exists for the 24 hour period with only a slight variation in wind direction. For these reasons the % annual occurrence results are probably overestimated. Therefore, it should be safe to say that our basic dispersed site will never exceed the short term national ambient air quality standards.

Conclusion. Of the many different factors involved in producing ground level concentrations of SO_2 from a power plant there seems to be only two controllable ones which can alter the maximum ground level concentration by any great amount. The first one, obviously, is to minimize the amount of pollution that is emitted from a stack. This can be achieved either through the use of low sulfur fuels, scrubbers or a combination of both. Minimizing emissions is the only way to guarantee low ground level concentrations.

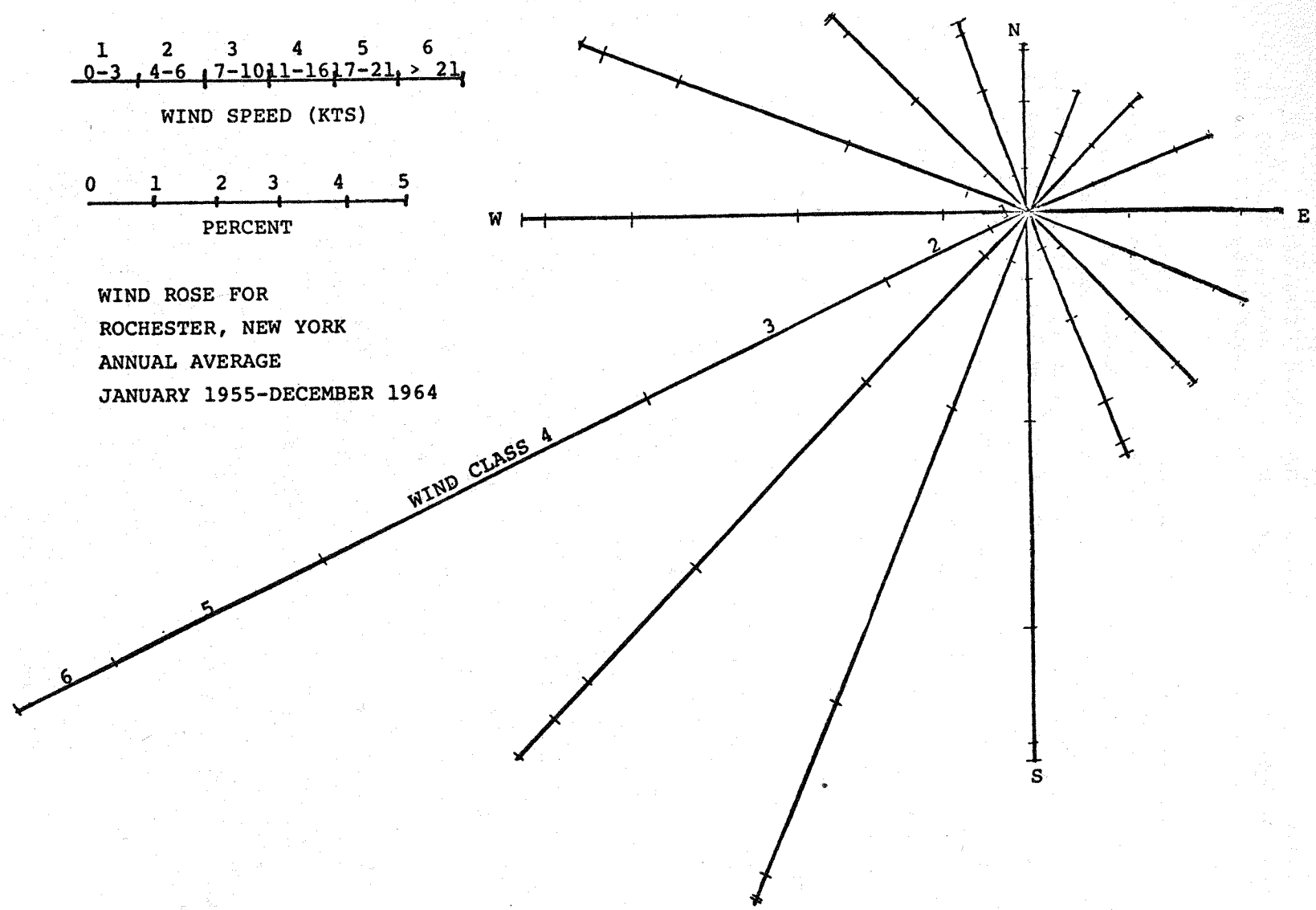

FIGURE 1/2.7-20

TABLE 1/2.7-7

MAXIMUM GROUND LEVEL CONCENTRATIONS FROM A TWO UNIT SITE

	WIND CLASS 1 (u=1.5m/sec)		2 (2.5)		3 (4.5)		4 (7.0)		5 (9.6)		6 (12.5)	
STABILITY CLASS 1	0	0	555	366	702	463	599	395	527	348	496	327
	.1462		.2113		0		0		0		0	
2	0	0	0	0	235	155	183	120	176	116	171	113
	.9000		1.3568		1.0884		0		0		0	
3	0	0	0	0	143	95	119	78	120	79	119	79
	.5117		1.6378		4.8346		1.0884		.1964		.0651	
4	0	0	0	0	22	14	24	16	28	18	30	20
	1.5887		6.4644		20.0932		25.1664		9.1917		2.9158	
5	4	2	3	2	2	2	2	1	2	1	1	1
	0		4.0568		7.9914		0		0		0	
6	6	4	5	3	4	2	3	2	2	2	2	1
	4.3937		6.1012		0		0		0		0	

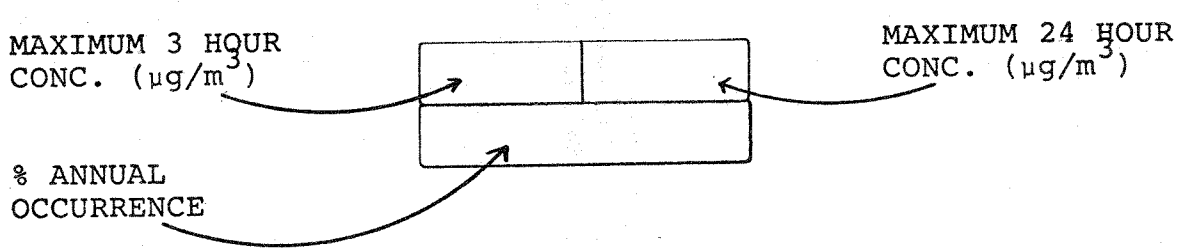

The second method is the use of tall stacks. Although this method cannot guarantee that high ground level concentrations of pollution will never occur, it can drastically reduce the probabilities of such an occurrence.

At present the best method seems to be a combination of these two alternatives; that is, a system which utilizes either low sulfur fuel or scrubbers to reduce the amount of pollution emitted to a level which can then be totally dispersed with the aid of tall stacks so that there are no resultant high concentrations of pollution at ground level.

Other factors such as stability class, wind speed and mixing height can also cause large variations in the maximum short term ground level concentration of pollution. Unfortunately, these factors are not subject to control by man. However, they are matters which should be taken into consideration before a power plant is constructed. If a certain area has an unusual high proportion of undesirable conditions then greater care must be taken to insure that high ground level concentrations do not occur.

The accuracy of the model used, and its correlation with metered data, has been discussed in Section 1/2.7.4.2. At this point, however, we feel that it is important to point out that even if the maximum ground level concentrations listed in Table 1/2.7-7 are doubled the final results are almost the same. The 3 hour limits are still never exceeded, and the 24 hour primary limit is not exceeded any more often than before. The secondary 24 hour limit is violated an additional 1% of the time, but this again is a small enough amount of time that we should be safe in assuming that it would not actually occur.

1/2.7.4.4 ANALYSIS OF SHORT TERM CONCENTRATIONS.

Introduction. This appendix represents an extension from the basic two unit site discussed in Section 1/2.7.4.3 to the multiple unit energy park. Comparisons are made between the concentrations resulting from an energy park and a typical two unit site. The additive effect of multiple units on maximum ground level concentrations is examined for two different park configurations to determine the effect of unit spacing within the park. The resultant table of maximum concentrations for the various conditions is given and site specific data is again used to give an estimate of the amount of time that the various air quality limits may be exceeded. The possible benefits occurring from plume interaction among the units is also examined.

Base Conditions. On the basis of the sensitivity analysis performed in the preceeding appendix the basic

energy park was assumed to consist of 12 point sources, with each point source representing the same unit pair utilized in Section 1/2.7.4.3. The baseline generating unit characteristics established in Section 1/2.7.4.3 were also used. Although these values do not give rise to the worst possible ground level concentrations they do represent reasonable values of the parameters. In the proposed fossil energy park some of the units are rated less than the 1320 MW chosen as our basic unit. Therefore under the assumption that all units are just meeting the national emission standards the smaller units will produce less SO_2. However, the smaller units will have a reduced volume flow of gas from the stack which, as was shown in Section 1/2.7.4.3, will tend to increase the maximum ground level concentration. Within the accuracy of the model used these two factors tend to cancel each other. If anything, the resultant ground level concentrations found using the larger units should be higher than what would occur if the actual unit sizes and corresponding parameters were taken into account.

Point Source Analysis. Beginning with our original two unit point source we see in Figure 1/2.7-21 an isopleth of the 15 minute ground level concentrations resulting from the wind blowing in a constant direction. From this we can see that when additional sources are added the resultant maximum concentration will greatly depend upon the configuration of the units.

Analysis of Park Layout. In expanding the analysis to an energy park, two different unit configurations were considered. For both layouts the units were assumed to be centered in a 10 mile square area. These layouts are shown in Figure 1/2.7-22. The configurations represent the two extremes in unit spacing within a park. Within each pair the units are about 75 to 100 meters apart.

As a comparison to the concentrations shown in Figure 1/2.7-21 for a single pair, isopleths of 15 minute ground level concentrations for the two park configurations for two different wind directions are shown in Figure 1/2.7-23 through 1/2.7-26.

As can be seen from Figures 1/2.7-23 and 1/2.7-24 altering the wind direction can cause about a 32% increase in the maximum ground level concentration. Under these conditions, therefore, wind direction is an important factor. Changes in wind direction with stability class 2 and 3 conditions resulted in only a 24% and 20% increase respectively. For the remaining conditions the maximum concentration was almost independent of wind direction.

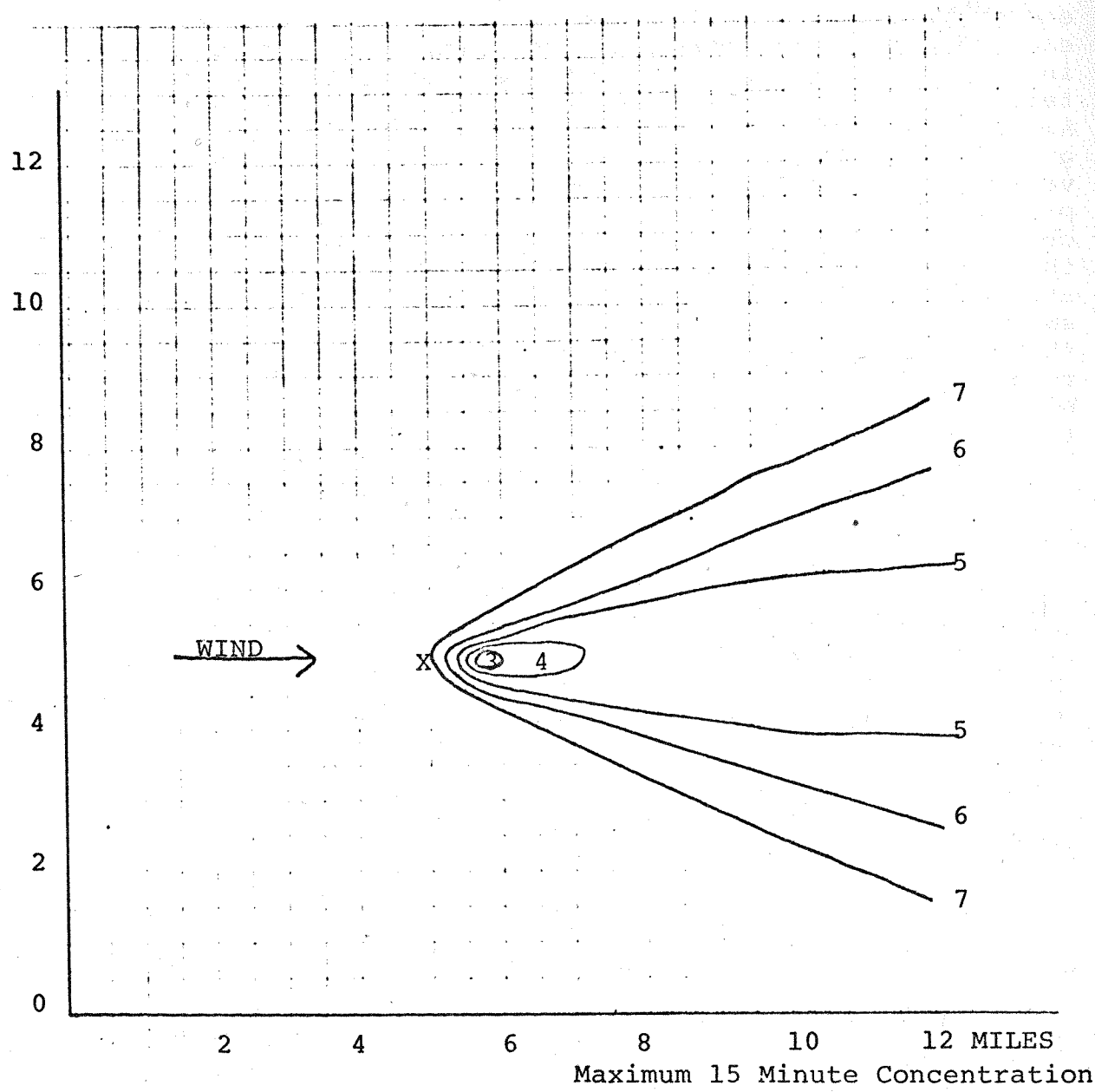

1 > 3 x 10^{-3}
2 > 2 x 10^{-3}
3 > 1 x 10^{-3}
4 > 5 x 10^{-4}
5 > 1 x 10^{-4}
6 > 1 x 10^{-5}
7 > 1 x 10^{-6}

Stability Class 1
Wind Speed 5 m/sec
Stack Height 244 m
Mixing Height 1000 m

FIGURE 1/2.7-21 Isopleth of 15 Minute Ground Level Concentrations

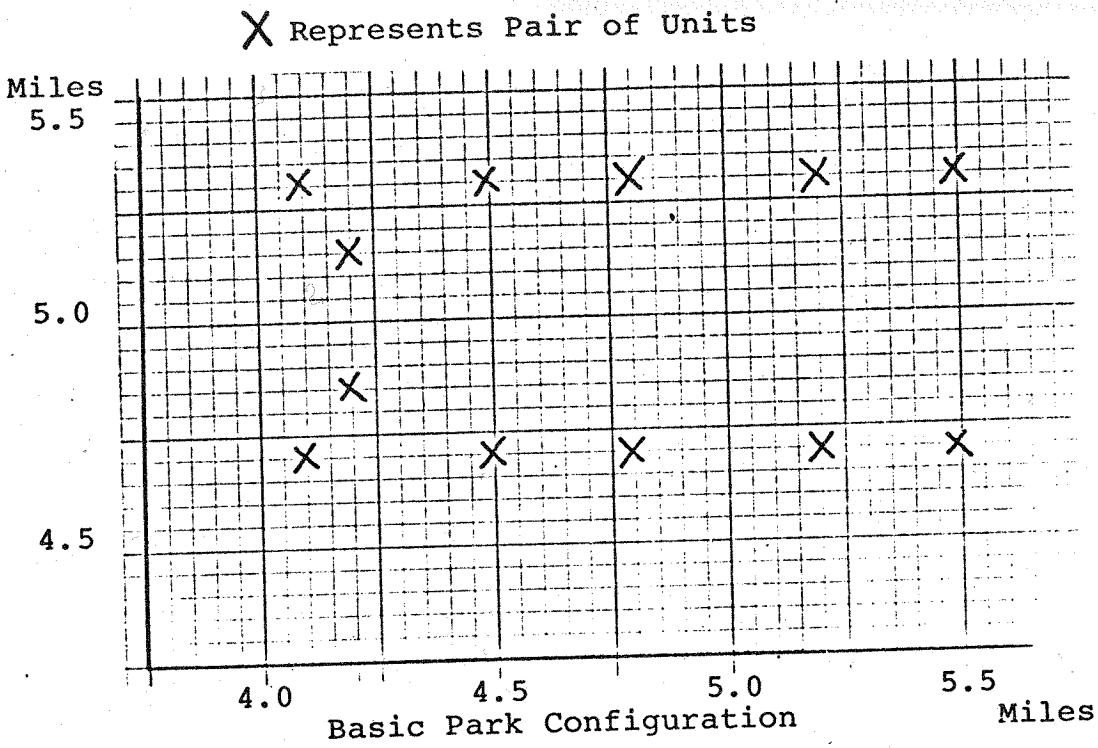

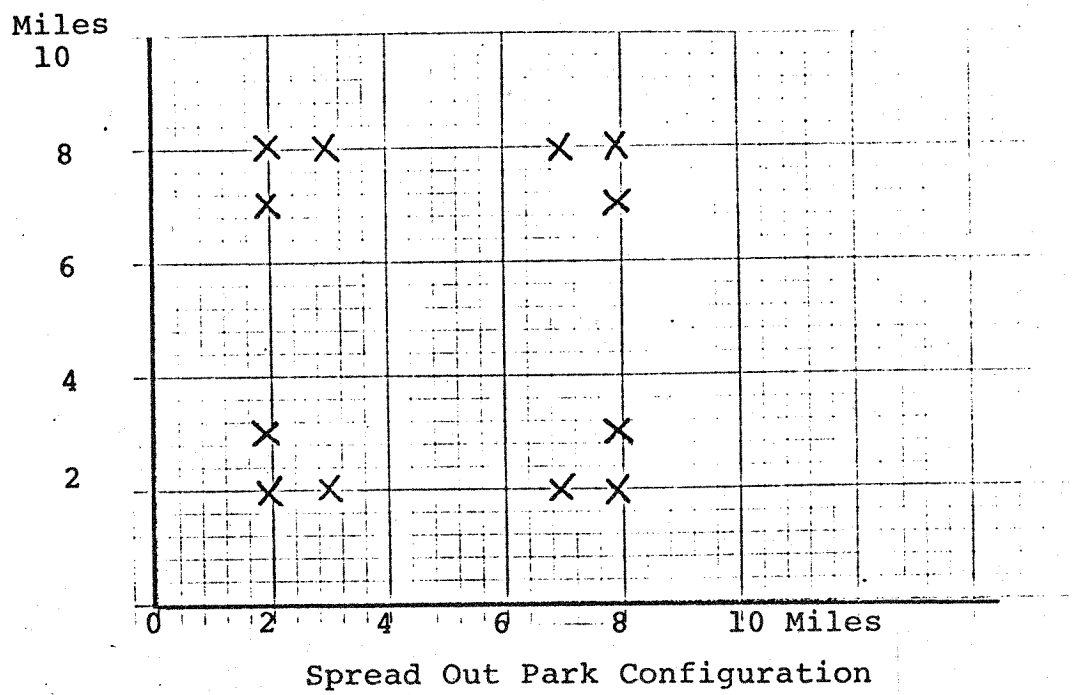

FIGURE 1/2.7-22

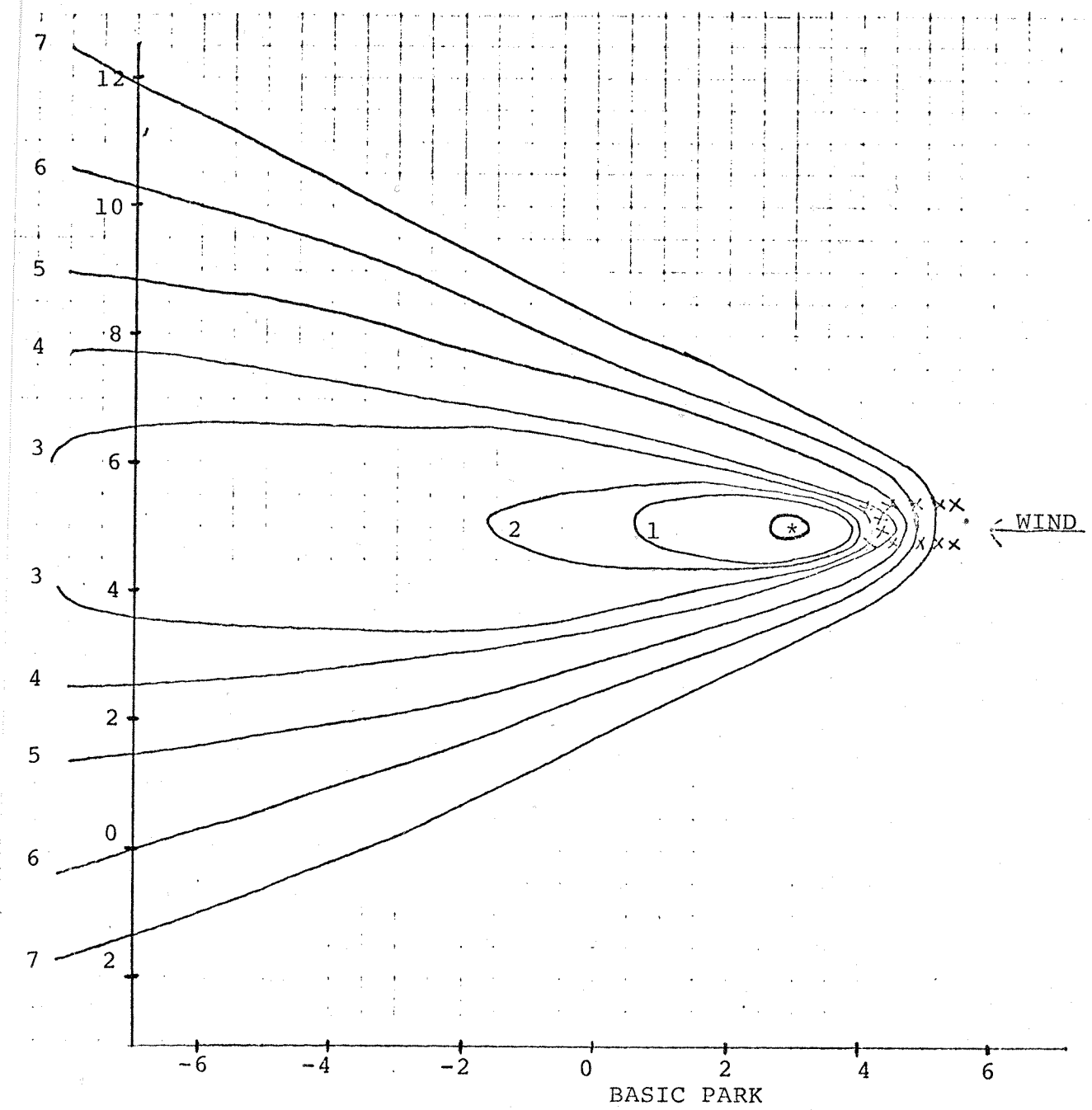

* > 4×10^{-3}
1 > 3×10^{-3}
2 > 2×10^{-3}
3 > 1×10^{-3}
4 > 5×10^{-4}
5 > 1×10^{-4}
6 > 1×10^{-5}
7 > 1×10^{-6}

Maximum 15 Minute Concentration
4.133×10^{-3} g/m^3

Stability Class 1
Wind Speed 5 m/sec.
Stack Height 244 m
Mixing Height 1000 m

FIGURE 1/2.7-23 Isopleth of 15 Minute Ground Level Concentrations

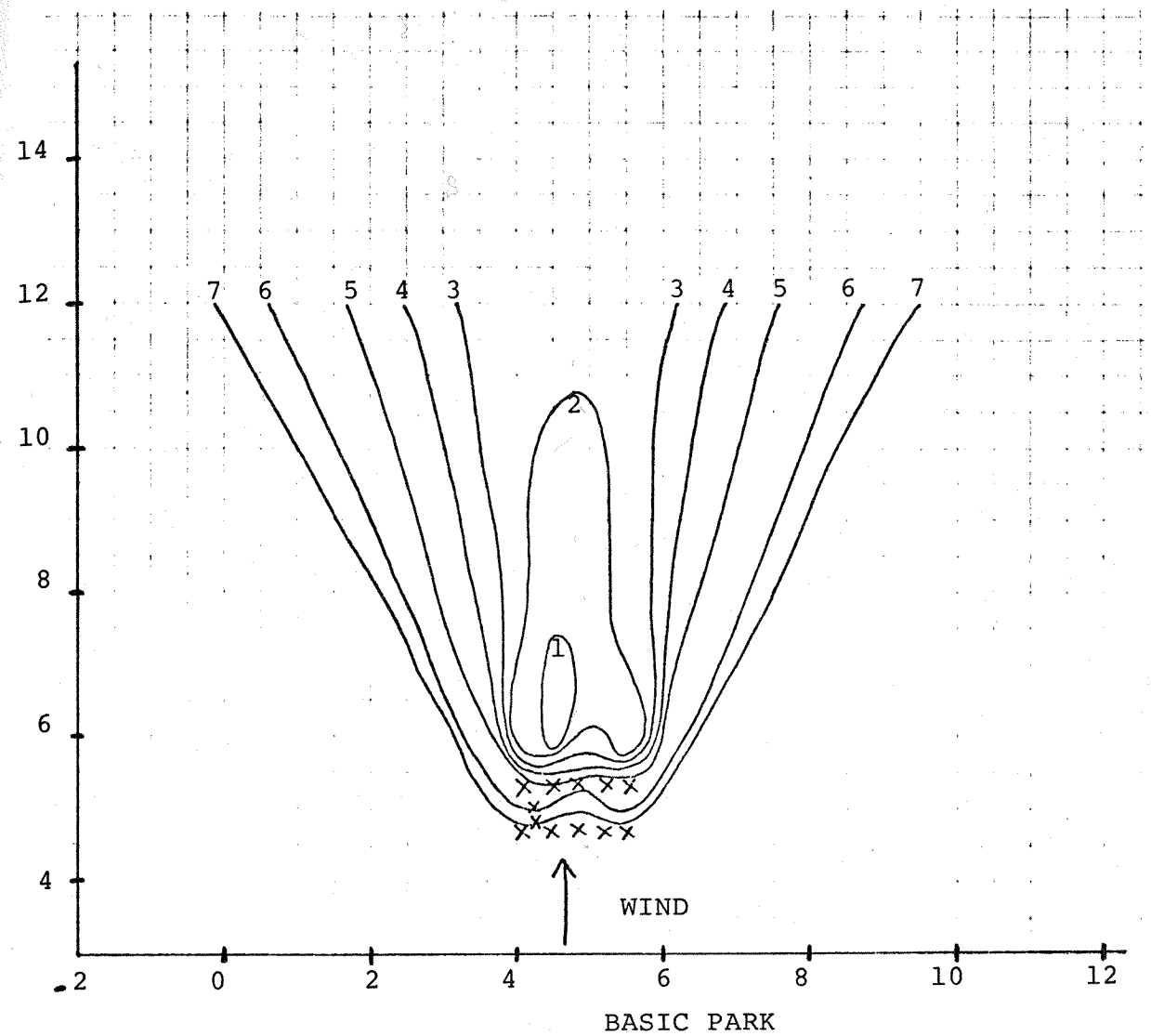

1 > 3×10^{-3}
2 > 2×10^{-3}
3 > 1×10^{-3}
4 > 5×10^{-4}
5 > 1×10^{-4}
6 > 1×10^{-5}
7 > 1×10^{-6}

Maximum 15 Minute Concentration
3.131×10^{-3} g/m^3

Stability Class 1
Wind Speed 5 m/sec.
Stack Height 244 m
Mixing Height 1000 m

FIGURE 1/2.7-24 Isopleth of 15 Minute Ground Level Concentrations

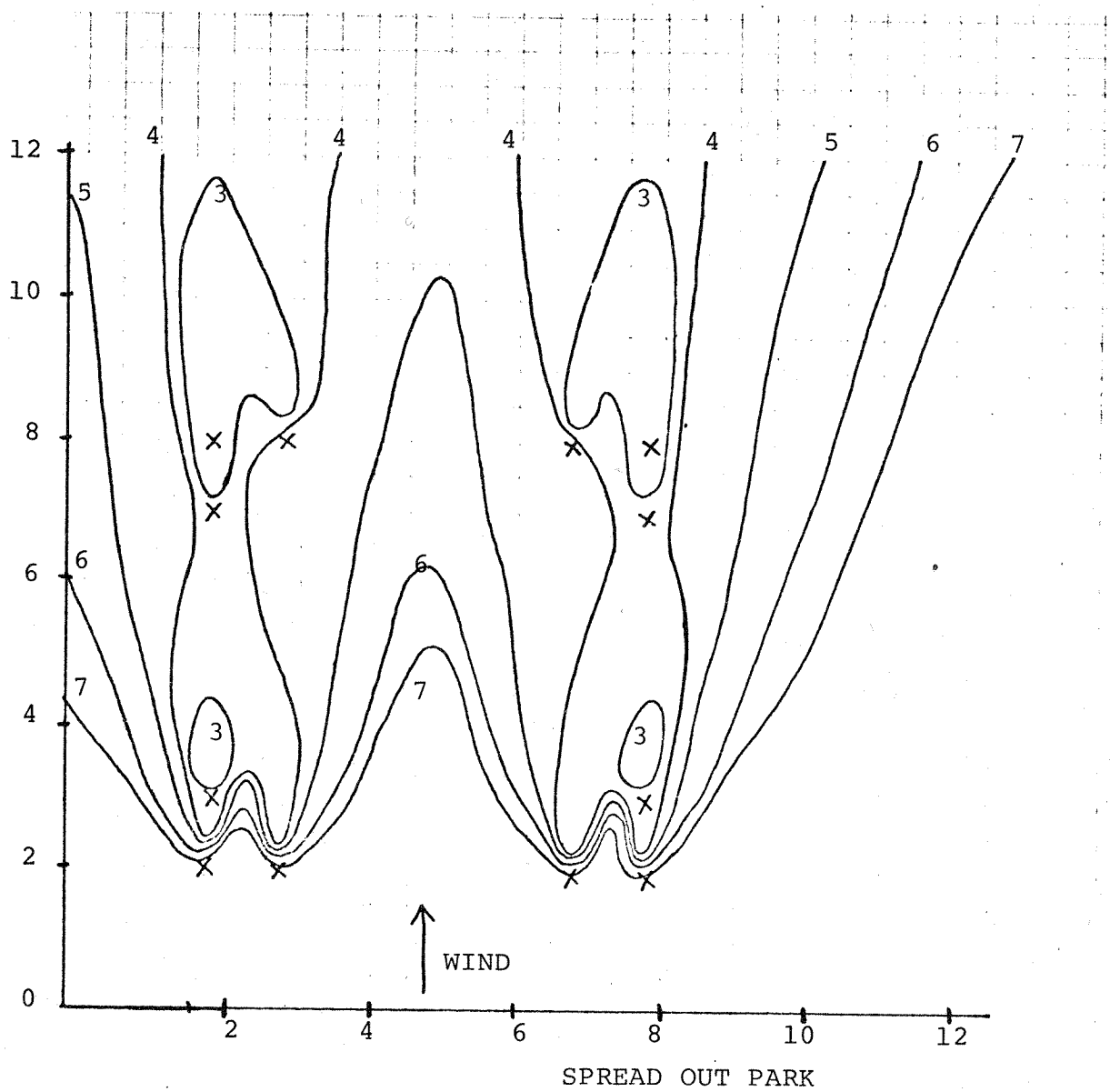

1 > 3 x 10^{-3}
2 > 2 x 10^{-3}
3 > 1 x 10^{-3}
4 > 5 x 10^{-4}
5 > 1 x 10^{-4}
6 > 1 x 10^{-5}
7 > 1 x 10^{-6}

Maximum 15 Minute Concentration
1.958 x 10^{-3} g/m^3

Stability Class 1
Wind Speed 5 m/sec.
Stack Height 244 m
Mixing Height 1000 m

FIGURE 1/2.7-25 Isopleth of 15 Minute Ground Level Concentration

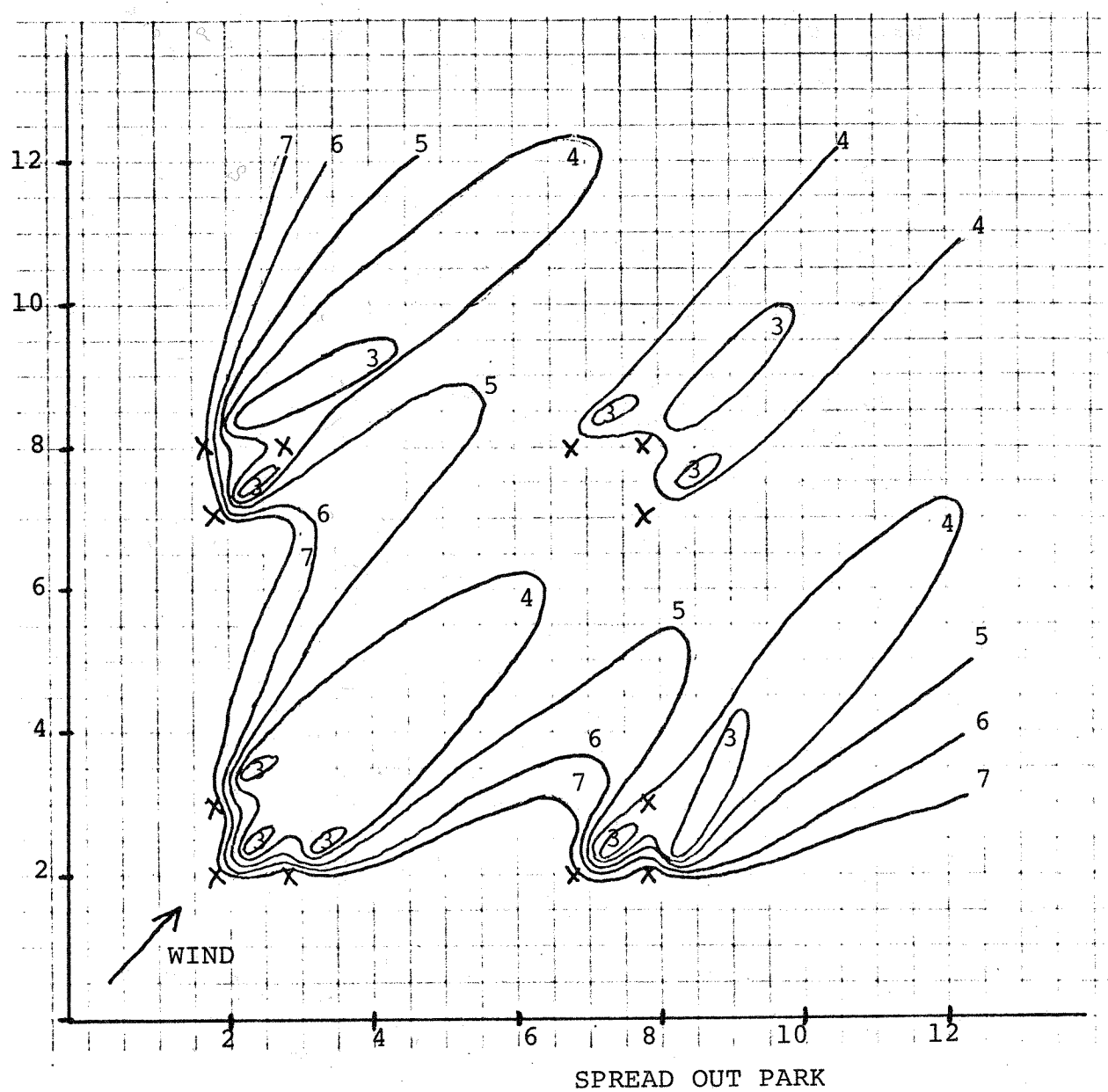

1 > 3 x 10^{-3}
2 > 2 x 10^{-3}
3 > 1 x 10^{-3}
4 > 5 x 10^{-4}
5 > 1 x 10^{-4}
6 > 1 x 10^{-5}
7 > 1 x 10^{-6}

Maximum 15 Minute Concentration
1.565 x 10^{-3} g/m^3

Stability Class 1
Wind Speed 5 m/sec.
Stack Height 244 m
Mixing Height 1000 m

FIGURE 1/2.7-26 Isopleth of 15 Minute Ground Level Concentrations

Therefore, although the final concentrations presented might be higher than what would actually occur, the over-estimation should not greatly effect the accuracy of our results.

In Table 1/2.7-8 and 1/2.7-9 are shown the maximum 3 and 24 hour ground level concentrations resulting from the 36 possible combinations of stability class and wind class for the two different park configurations. In order to have some idea as to how often each condition might occur, we again used meteorological data for Rochester, New York to determine an average annual % occurrence. It should be noted that the concentrations were derived by assuming that the wind was always blowing in the direction which gave rise to the highest concentration for that park configuration, and also assuming that the given condition existed for the entire period specified. On the other hand, the % occurrences were obtained by summing the occurrences for each condition for all possible wind directions. Since the wind direction is a factor in determining the ground level concentration resulting from a park we can see that our analysis may be over-estimating the amount of time that an energy park exceeds the national ambient air quality standards. However, it is obvious that under present technology, environmental considerations could be a limiting factor on the size of an energy park.

Comparison of Park to Dispersed Siting. In Section 1/2.7.4.3 we saw that if two units were meeting the national emission standards, the ambient air quality standards would not pose any problem. The same cannot be said for a fossil park. In the park situation the additive effect of the many units causes a much greater number of conditions during which the short term ambient air quality limits will be exceeded. For example, in the two unit case under stability class 3 conditions the maximum 3 hour ground level concentration was 143 $\mu g/m^3$, occurring about 15 km downwind from the source. Since the secondary 3 hour limit is 1300 $\mu g/m^3$ this relatively small concentration causes no problems. However, in our basic park configuration, with all of the units spaced within a few kilometers of each other, the concentrations from the individual units will all reach their peaks in the same general area. The result is that, under the same conditions that were used above for the two unit site, the maximum 3 hour concentration is now 1556 $\mu g/m^3$, almost 11 times the amount caused by a single pair. In the spread out park under the same conditions the maximum concentration is only 637 $\mu g/m^3$, less than half the allowable amount and only about 4.5 times the concentration caused by a single pair. Therefore, we can see that one of

TABLE 1/2.7-8

CONCENTRATIONS RESULTING FROM THE BASIC PARK DISTRIBUTION

	WIND CLASS 1 (u=1.5m/sec)		2 (2.5)		3 (4.5)		4 (7.0)		5 (9.6)		6 (12.5)	
STABILITY CLASS 1	0	0	1205	795	2794	1843	1796	1185	1310	864	1006	663
	.1462		.2113		0		0		0		0	
2	0	0	0	0	2185	1442	1514	999	1235	815	1053	695
	.9000		1.3568		1.0884		0		0		0	
3	0	0	0	0	1556	1027	1173	774	1064	702	982	648
	.5117		1.6378		4.8346		1.0884		.1964		.0651	
4	0	0	0	0	264	168	288	192	336	216	360	240
	1.5887		6.4644		20.0932		25.1664		9.1917		2.9158	
5	48	24	36	24	24	24	24	12	24	12	12	12
	0		4.0568		7.9914		0		0		0	
6	72	48	60	32	48	24	36	24	24	24	24	12
	4.3937		6.1012		0		0		0		0	

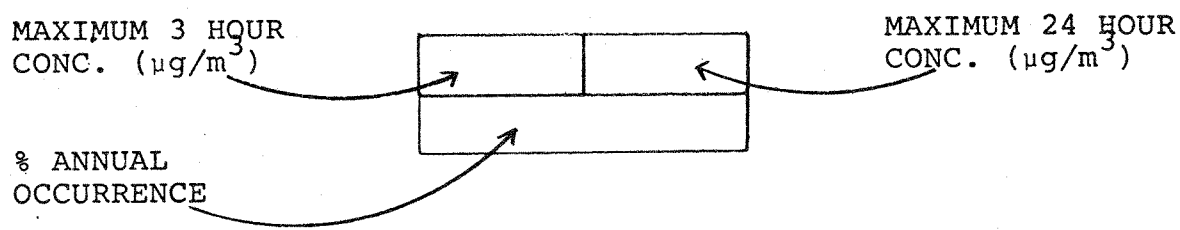

TABLE 1/2.7-9

CONCENTRATIONS RESULTING FROM THE SPREAD OUT PARK CONFIGURATION

	WIND CLASS 1 (u=1.5m/sec)		2 (2.5)		3 (4.5)		4 (7.0)		5 (9.6)		6 (12.5)	
STABILITY CLASS 1	0	0	931	614	1255	828	1077	710	925	610	784	517
	.1462		.2113		0		0		0		0	
2	0	0	0	0	789	521	572	377	485	320	437	288
	.9000		1.3568		1.0884		0		0		0	
3	0	0	0	0	637	420	467	308	420	277	381	252
	.5117		1.6378		4.8346		1.0884		.1964		.0651	
4	0	0	0	0	219	144	167	110	156	103	164	108
	1.5887		6.4644		20.0932		25.1664		9.1917		2.9158	
5	48	24	36	24	24	24	24	12	24	12	12	12
	0		4.0568		7.9914		0		0		0	
6	72	48	60	36	48	24	36	24	24	24	24	12
	4.3937		6.1012		0		0		0		0	

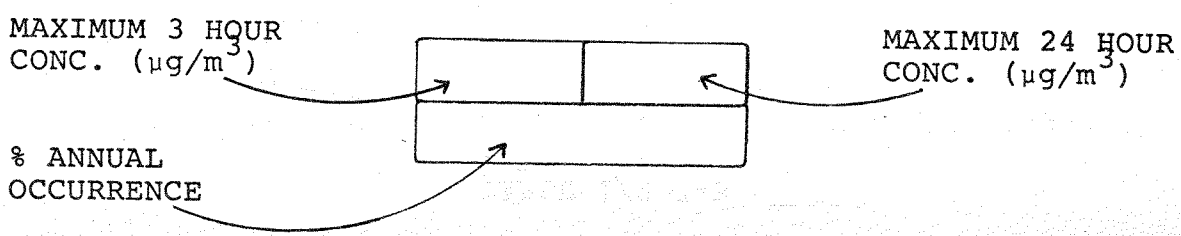

the best ways of controlling ground level concentrations is to maximize the distance between units. This, however, is contrary to the idea of an energy park, where the majority of the benefits are due to the close spacing of the units. Therefore, under the assumptions made and using a park configuration which tends to maximize the monetary benefits, environmental constraints do impose a strict limitation on the size of an energy park.

Effect of Plume Interaction. An important factor to consider in the analysis of an energy park is the possible interaction of the plumes from the various point sources. When multiple sources are located close together, and in the limit exhausted through the same stack, the result is an increased volume flow of hot gas from a relatively small area.

In the area of plume enhancement from multiple point sources much work has been done by Gary Briggs[27], who was also responsible for some of the plume rise equations discussed in Section 1/2.7.4.2. For "N" point sources, he recommends using:

$$E_N = \frac{\Delta h_N}{\Delta h_1} = \left(\frac{N + S}{1 + S}\right)^{1/3}$$

where "Δh_N" is the new plume rise from the "N" sources, "Δh_1" is the original plume rise from one source and "S" is a spacing factor defined as:

$$S = 6\left(\frac{(N - 1)s}{N^{1/3}\ \Delta h_1}\right)^{3/2}$$

where "s" is the spacing between the units. When the spacing is zero E_N reduces to $N^{1/3}$ which agrees with the original plume rise equations discussed in Section 1/2.7.4.2. Using these equations the graph in Figure 1/2.7-27 was developed for two sources spaced from 0 to 1000 m apart. The maximum benefit occurs at zero spacing and produces about a 25% increase in plume rise. The benefits decrease rapidly with only a 6% increase occurring at .5 km spacing.

The important consideration is what this added plume rise does to ground level concentrations. According to work published by EPA the ground level concentration, χ, at a given point is proportional to:

$$e^{\left(-\frac{1}{2}\frac{H^2}{\sigma_z^2}\right)}$$

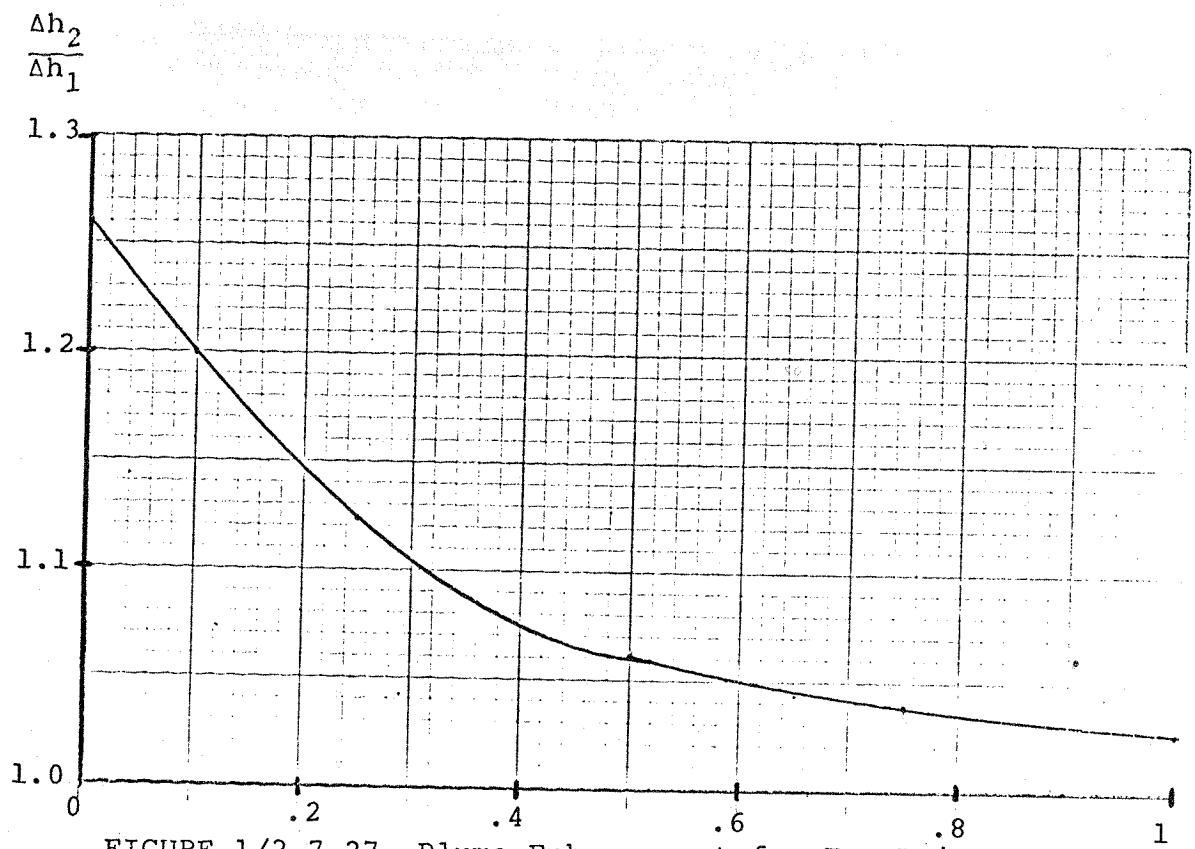

FIGURE 1/2.7-27 Plume Enhancement for Two Point Sources

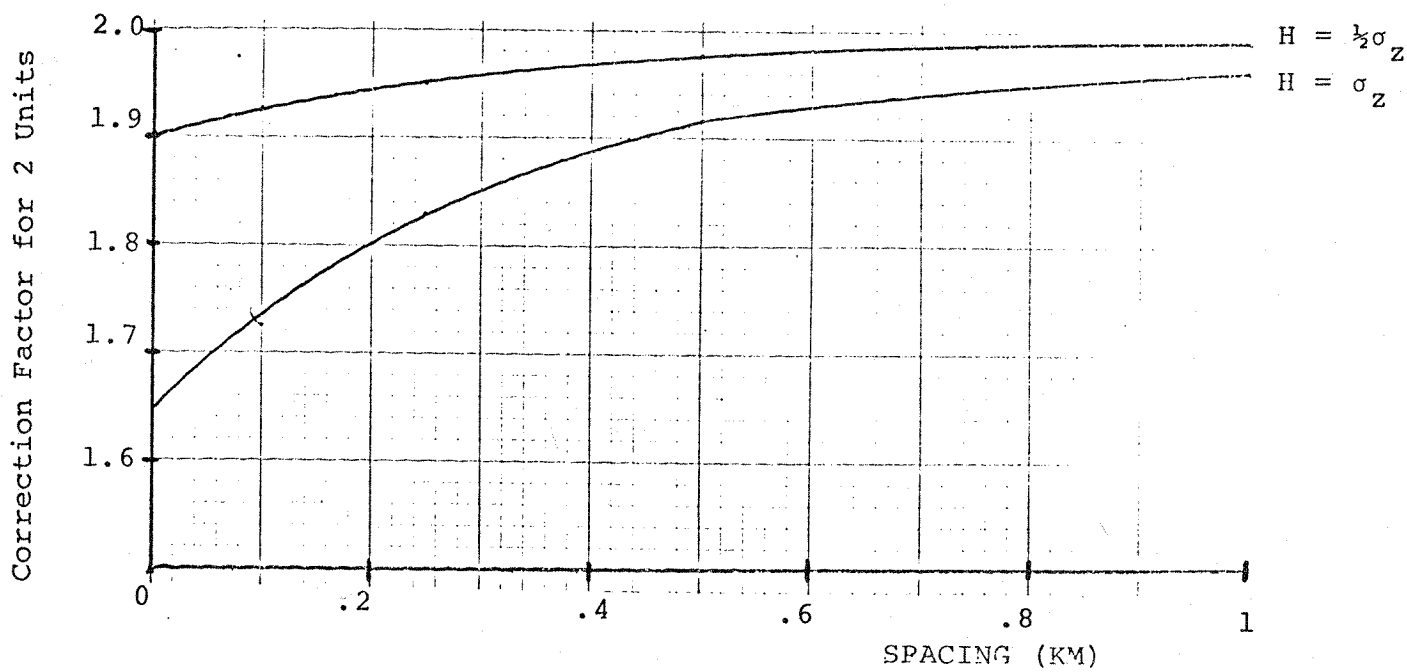

FIGURE 1/2.7-28 Concentration Correction Factors When Going from 1 to 2 Units

where "H" is the total plume height and σ_z is the standard deviation of plume concentration distribution in the vertical direction. Therefore, for two sources, we get:

$$\chi_2 \alpha 2 e^{\left(-\frac{1}{2} \left(\frac{H'}{\sigma_z} \right)^2\right)}$$

where "H'" is the new plume rise due to plume enhancement and can be related to H by:

$$H' = H \delta$$

where δ is a nondimensional multiplier derived from E_N and the stack height. If we ratio these two concentrations we then can get:

$$\frac{\chi 2}{\chi_1} = 2 \quad \exp\left[-\frac{1}{2} \left(\frac{H}{\sigma_z} \right)^2 \quad (\delta^2 - 1)\right]$$

In the absence of plume enhancement δ is one and this equation reduces to:

$$\chi_2 = 2 \chi_1 ,$$

which is the expected result. In Figure 1/2.7-28 the resultant correction factor for going from one to two units is shown as a function of unit spacing for $\sigma_z = H$ and $\sigma_z = 2H$. Depending upon the stability class under consideration, the region:

$$H \leq \sigma_z \leq 2H$$

is representative of downwind distances varying from about 1 to 30 km for the units being investigated. Since this covers the region of peak ground level concentrations for the first three stability classes, which are the only ones which tend to cause high levels, it is reasonable to assume that the actual correction factors will fall in the region between the two curves in Figure 1/2.7-28. As added correlation of this graph, in work conducted by the Air Quality Branch of TVA[18] the suggested correction factor for two units with zero spacing is 1.7, which does fall within the desired region.

An inherent assumption in this analysis of plume interaction is that the mixing height is high enough that the basic coning model adequately describes the ground level

concentrations. If this is not the case, then the actual correction factors will be slightly higher than those shown in Figure 1/2.7-28.

Final Review of Assumptions. Throughout the analysis values of certain parameters were chosen which, although they did not cause the highest levels of concentration, they also did not produce the lowest concentrations. This was done so as not to prejudice the results in favor of energy parks. As a final check on the sensitivity of our answers to variations of the parameters, one more table is presented which was obtained by using more optimistic values. The new assumptions are:

- Stack height 366 m (1200 ft.)
- Gas temperature 500°K (440°F)
- Mixing height 1500 m (4920 ft.)
- Plume interaction causes a 20% reduction in concentration.

Although these assumptions may be overly optimistic, the results obtained, when combined with our previous answers, should give us a region in which the actual concentrations will fall. Since stability classes 4, 5, and 6 never caused the limits to be exceeded they were omitted from this part of the analysis. Table 1/2.7-10 shows the results obtained from the first 3 stability classes along with the results from the more pessimistic analysis. As can be seen, although the limits are still exceeded at times, the concentrations are now considerably smaller than in the preceeding case for all of the conditions.

In Table 1/2.7-11 the percent of the time that the park will exceed the three short term ambient air quality limits is given for the two different sets of assumptions. The most important part of this table is the numbers for the 3 hour secondary limits. As was mentioned before, the model used assumes that the given conditions will exist for the entire period specified, with only minor variations in wind direction. Since it is more likely that a condition will last for 3 hours than for 24 hours, it follows that the 3 hour concentrations have a greater probability of being reached than the 24 hour concentrations.

TABLE 1/2.7-10

SENSITIVITY OF CONCENTRATIONS TO CHANGES IN ASSUMPTIONS

	WIND CLASS 1 (u=1.5m/sec)		2 (2.5)		3 (4.5)		4 (7.0)		5 (9.6)		6 (12.5)	
OPTIMISTIC ASSUMPTIONS												
STABILITY CLASS 1	0	0	487	321	1489	982	958	632	699	461	537	354
	.1462		.2113		0		0		0		0	
2	0	0	0	0	960	634	716	472	620	409	545	359
	.9000		1.3568		1.0884		0		0		0	
3	0	0	0	0	612	404	513	338	490	323	461	304
	.5117		1.6378		4.8346		1.0884		.1964		.0651	
PESSIMISTIC ASSUMPTIONS												
1	0	0	1205	795	2794	1843	1796	1185	1310	864	1006	663
	.1462		.2113		0		0		0		0	
2	0	0	0	0	2185	1442	1514	999	1235	815	1053	695
	.9000		1.3568		1.0884		0		0		0	
3	0	0	0	0	1556	1027	1173	774	1064	702	982	648
	.5117		1.6378		4.8346		1.0884		.1964		.0651	

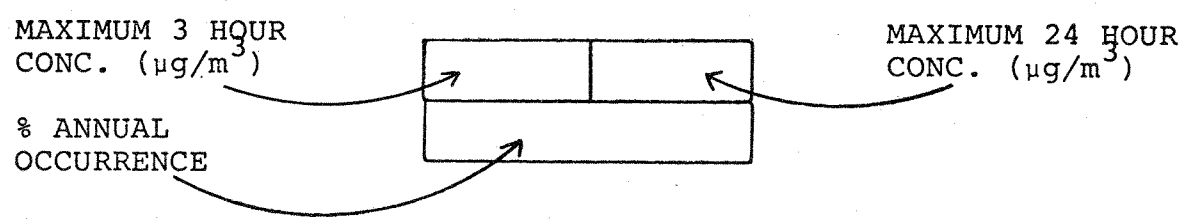

# Cases / % Occurrences	24 Hr. PRI (365)	3 Hr. Sec. (1300)	24 Hr. PRI (260)
Optimistic Assumptions	7	1	13
	5.9	0	7.5
Pessimistic Assumptions	13	6	13
	7.5	5.9	7.5

TABLE 1/2.7-11 COMPARISON OF RESULTS OBTAINED FROM DIFFERENT ASSUMPTIONS

Conclusions. The maximum ground level concentrations of SO_2 from an energy park are more sensitive to variations in parameters than was observed for the two unit case. However, even when an optimistic set of parameters is chosen, and plume interaction accounted for, the park will exceed the 24 hour primary limits almost 6% of the time. Due to this high sensitivity a detailed analysis of meteorological conditions should be made at any proposed park site before any other work is undertaken. Constant metering should be done throughout the construction and life of the park to insure that the various air quality limits are not exceeded. It might also be advisable to use wind tunnels and park models to more clearly determine the environmental effects of the park.

Under present technology and with high sulfur coal, it is highly probable that the short term ambient air quality limits will cause a significant size limitation on an energy park.

Obviously any advances made in fuel desulfurization will greatly alter the position of energy parks. If sufficient progress is made in the areas of reliability and efficiency, the environmental constraints on fossil parks will be removed.

1/2.7.4.5 ANALYSIS OF LONG TERM CONCENTRATIONS

Introduction. In Section 1/2.7.4.4 we determined the maximum average ground level concentrations of SO_2 which might occur for an energy park over periods of 3 and 24 hours. The remaining limit specified by the EPA under the ambient air quality standards is the annual average concen-

tration. In this section we will determine this annual concentration for various unit configurations using a specific set of meteorological conditions. The sensitivity of our results to extreme changes in conditions will also be examined.

Long Term Analysis. In analyzing the annual average ground level concentration of SO_2 the EPA Program "CDM" (Climatological Dispersion Model), was used. Basically this program determines the ground level concentration at various points for all of the combinations of wind class and stability class. A weighted average is then made with the weighting factors obtained from a joint frequency distribution of wind direction, wind speed and stability class. For a specific site the joint frequency distribution is constructed from metered data with the compass divided into 16 equal segments for the purpose of determining the wind direction. The weighted average thus determined is a good approximation to the annual average ground level concentration of pollutants.

Base Conditions. Annual concentrations are computed for four different unit configurations based on a joint frequency distribution constructed from metered data collected over a ten year period for the Rochester, New York area. The joint frequency distribution shown in Table 1/2.7-12 is the same distribution that was used in Sections 1/2.7.4.3 and 1/2.7.4.4 with the exception that now the % occurrences are distributed among the 16 different wind directions. The first three unit configurations studied are the single source, the basic energy park and the spread out park used in the analysis of short term concentrations (Section 1/2.7.4.4). The final configuration consists of 12 pairs of units evenly spaced along the perimeter of a square 45 miles on a side. This was done to approximate the annual concentrations which would occur with dispersed siting of units.

In addition, a sensitivity analysis was made for each configuration using a uniform wind rose. This wind rose was formed by giving each of the 576 terms (6 stability classes, 6 wind speed classes, 16 wind directions) in the joint frequency distribution an equal probability of occurrence.

Each of the unit pairs used in this analysis is identical to the basic point sources discussed in Sections 1/2.7.4. and 1/2.7.4.4.

Single Source. The annual average ground level concentrations from a single point source, using the frequency distribution shown in Table 1/2.7-12, are shown in Figures

TABLE 1/2.7-12

ROCHESTER STABILITY WIND ROSE DATA

COMI VERSION 72313, RUN 5

THE JOINT FREQUENCY FUNCTION FOR STABILITY CLASS 1

SECTOR	U1	U2	U3	U4	U5	U6
1	0.300000E-04	0.910000E-04	0.	0.	0.	0.
2	0.350000E-04	0.800000E-04	0.	0.	0.	0.
3	0.370000E-04	0.910000E-04	0.	0.	0.	0.
4	0.650000E-04	0.110000E-03	0.	0.	0.	0.
5	0.520000E-04	0.110000E-03	0.	0.	0.	0.
6	0.820000E-04	0.140000E-03	0.	0.	0.	0.
7	0.195000E-03	0.120000E-03	0.	0.	0.	0.
8	0.960000E-04	0.160000E-03	0.	0.	0.	0.
9	0.162000E-03	0.171000E-03	0.	0.	0.	0.
10	0.142000E-03	0.110000E-03	0.	0.	0.	0.
11	0.133000E-03	0.251000E-03	0.	0.	0.	0.
12	0.142000E-03	0.217000E-03	0.	0.	0.	0.
13	0.950000E-04	0.140000E-03	0.	0.	0.	0.
14	0.500000E-04	0.910000E-04	0.	0.	0.	0.
15	0.670000E-04	0.120000E-03	0.	0.	0.	0.
16	0.600000E-04	0.690000E-04	0.	0.	0.	0.

THE JOINT FREQUENCY FUNCTION FOR STABILITY CLASS 2

SECTOR	U1	U2	U3	U4	U5	U6
1	0.264000E-03	0.560000E-03	0.300000E-03	0.	0.	0.
2	0.197000E-03	0.411000E-03	0.331000E-03	0.	0.	0.
3	0.246000E-03	0.434000E-03	0.297000E-03	0.	0.	0.
4	0.437000E-03	0.655000E-03	0.434000E-03	0.	0.	0.
5	0.412000E-03	0.662000E-03	0.457000E-03	0.	0.	0.
6	0.399000E-03	0.651000E-03	0.445000E-03	0.	0.	0.
7	0.657000E-03	0.811000E-03	0.423000E-03	0.	0.	0.
8	0.873000E-03	0.834000E-03	0.434000E-03	0.	0.	0.
9	0.124400E-02	0.165600E-02	0.123300E-02	0.	0.	0.
10	0.965000E-03	0.156500E-02	0.143900E-02	0.	0.	0.
11	0.129600E-02	0.146300E-02	0.834000E-03	0.	0.	0.
12	0.900000E-03	0.116500E-02	0.914000E-03	0.	0.	0.
13	0.340000E-03	0.651000E-03	0.697000E-03	0.	0.	0.
14	0.271000E-03	0.982000E-03	0.731000E-03	0.	0.	0.
15	0.227000E-03	0.537000E-03	0.645000E-03	0.	0.	0.
16	0.272000E-03	0.480000E-03	0.811000E-03	0.	0.	0.

THE JOINT FREQUENCY FUNCTION FOR STABILITY CLASS 3

SECTOR	U1	U2	U3	U4	U5	U6
1	0.186000E-03	0.411000E-03	0.226100E-02	0.560000E-03	0.110000E-04	0.
2	0.597000E-04	0.331000E-03	0.169900E-02	0.594000E-03	0.690000E-04	0.
3	0.580000E-04	0.226000E-03	0.156500E-02	0.343000E-03	0.460000E-04	0.
4	0.690000E-04	0.720000E-03	0.125100E-02	0.217000E-03	0.110000E-04	0.
5	0.329000E-03	0.662000E-03	0.143900E-02	0.148000E-03	0.	0.
6	0.413000E-03	0.914000E-03	0.185500E-02	0.171000E-03	0.	0.
7	0.681000E-03	0.103700E-02	0.193200E-02	0.114300E-03	0.110000E-04	0.
8	0.457000E-03	0.834000E-03	0.214700E-02	0.228500E-03	0.110000E-04	0.
9	0.824000E-03	0.233000E-02	0.526500E-02	0.811000E-03	0.340000E-04	0.
10	0.563000E-03	0.261500E-02	0.812200E-02	0.971000E-03	0.460000E-04	0.
11	0.616000E-03	0.274100E-02	0.588300E-02	0.101600E-02	0.274300E-03	0.114000E-03
12	0.319000E-03	0.148500E-02	0.454600E-02	0.190700E-02	0.731000E-03	0.434000E-03
13	0.170000E-03	0.582000E-03	0.253500E-02	0.108500E-02	0.286000E-03	0.460000E-04
14	0.710000E-04	0.503000E-03	0.239800E-02	0.116500E-02	0.320000E-03	0.460000E-04
15	0.117000E-03	0.468000E-03	0.273000E-02	0.822000E-03	0.910000E-04	0.110000E-04
16	0.143000E-03	0.514000E-03	0.276400E-02	0.731000E-03	0.230000E-04	0.

COMI VERSION 72313, RUN 5

THE JOINT FREQUENCY FUNCTION FOR STABILITY CLASS 4

SECTOR	U1	U2	U3	U4	U5	U6
1	0.460000E-03	0.205600E-02	0.605700E-02	0.765700E-02	0.142800E-02	0.137000E-03
2	0.369500E-03	0.119700E-02	0.561400E-02	0.831200E-02	0.173600E-02	0.338000E-03
3	0.534000E-03	0.157400E-02	0.620200E-02	0.871400E-02	0.179300E-02	0.251000E-03
4	0.877000E-03	0.396400E-02	0.105700E-01	0.531100E-02	0.480000E-03	0.460000E-04
5	0.101600E-02	0.452300E-02	0.129400E-01	0.628200E-02	0.343000E-03	0.110000E-04
6	0.130700E-02	0.474000E-02	0.101700E-01	0.461400E-02	0.594000E-03	0.800000E-04
7	0.162700E-02	0.548200E-02	0.766400E-02	0.330100E-02	0.365000E-03	0.690000E-04
8	0.102100E-02	0.353400E-02	0.924000E-02	0.724100E-02	0.177000E-02	0.137000E-03
9	0.159300E-02	0.621300E-02	0.190900E-01	0.169900E-01	0.292400E-02	0.343000E-03
10	0.136400E-02	0.607600E-02	0.238900E-01	0.274910E-01	0.444300E-02	0.514000E-03
11	0.165600E-02	0.735500E-02	0.205810E-01	0.241900E-01	0.820000E-02	0.316400E-02
12	0.114500E-02	0.587000E-02	0.236420E-01	0.551640E-01	0.357600E-01	0.162440E-01
13	0.102500E-02	0.348300E-02	0.137170E-01	0.251040E-01	0.140140E-01	0.398600E-02
14	0.796000E-03	0.326000E-02	0.127350E-01	0.279130E-01	0.130430E-01	0.314100E-02
15	0.583000E-03	0.291700E-02	0.100850E-01	0.145510E-01	0.375900E-02	0.560000E-03
16	0.517000E-03	0.235300E-02	0.838600E-02	0.682900E-02	0.117600E-02	0.690000E-04

THE JOINT FREQUENCY FUNCTION FOR STABILITY CLASS 5

SECTOR	U1	U2	U3	U4	U5	U6
1	0.	0.100100E-02	0.147300E-02	0.	0.	0.
2	0.	0.525000E-03	0.132500E-02	0.	0.	0.
3	0.	0.799000E-03	0.136200E-02	0.	0.	0.
4	0.	0.179300E-02	0.165600E-02	0.	0.	0.
5	0.	0.370000E-02	0.275200E-02	0.	0.	0.
6	0.	0.365100E-02	0.181600E-02	0.	0.	0.
7	0.	0.423700E-02	0.122200E-02	0.	0.	0.
8	0.	0.335500E-02	0.237600E-02	0.	0.	0.
9	0.	0.483100E-02	0.711500E-02	0.	0.	0.
10	0.	0.431700E-02	0.154300E-01	0.	0.	0.
11	0.	0.448900E-02	0.154070E-01	0.	0.	0.
12	0.	0.320700E-02	0.133510E-01	0.	0.	0.
13	0.	0.147300E-02	0.622500E-02	0.	0.	0.
14	0.	0.115400E-02	0.421400E-02	0.	0.	0.
15	0.	0.107400E-02	0.249000E-02	0.	0.	0.
16	0.	0.948000E-03	0.167900E-02	0.	0.	0.

THE JOINT FREQUENCY FUNCTION FOR STABILITY CLASS 6

SECTOR	U1	U2	U3	U4	U5	U6
1	0.754000E-03	0.119900E-02	0.	0.	0.	0.
2	0.605000E-03	0.685000E-03	0.	0.	0.	0.
3	0.739000E-03	0.948000E-03	0.	0.	0.	0.
4	0.115300E-02	0.166700E-02	0.	0.	0.	0.
5	0.209200E-02	0.258000E-02	0.	0.	0.	0.
6	0.311600E-02	0.299700E-02	0.	0.	0.	0.
7	0.465300E-02	0.416700E-02	0.	0.	0.	0.
8	0.345400E-02	0.326600E-02	0.	0.	0.	0.
9	0.716400E-02	0.716100E-02	0.	0.	0.	0.
10	0.568200E-02	0.152200E-01	0.	0.	0.	0.
11	0.620200E-02	0.113130E-01	0.	0.	0.	0.
12	0.397400E-02	0.673800E-02	0.	0.	0.	0.
13	0.186600E-02	0.306000E-02	0.	0.	0.	0.
14	0.103800E-02	0.175900E-02	0.	0.	0.	0.
15	0.967000E-03	0.191900E-02	0.	0.	0.	0.
16	0.739000E-03	0.129100E-02	0.	0.	0.	0.

1/2.7-29 and 1/2.7-30. The two separate plots were made in order to show the concentrations in the vicinity of the source and also the long range effect of pollution dispersal. In Figure 1/2.7-30 the effect of the predominant wind direction towards the ENE can be seen quite clearly, with the maximum concentration of about 2.7 $\mu g/m^3$ occurring in this direction from the source. In Figure 1/2.7-31 the uniform wind rose was used and the expected circular pattern of concentrations can be seen. The maximum concentration is now about 9.9 $\mu g/m^3$ which occurs close to the source. This is due to the much more frequent occurrence of stability class 1 conditions which reach their peak concentrations within a short distance from the source.

The primary and secondary limits for the annual average concentration of SO_2 are 80 $\mu g/m^3$ and 60 $\mu g/m^3$ respectively. Therefore, it should be quite safe to say that a single pair of units meeting the national emission standards will never exceed the primary or secondary annual average concentration limits regardless of the meteorological conditions which occur in that region.

Basic Energy Park. Using the Rochester, New York wind rose data we see in Figures 1/2.7-32 and 1/2.7-33 the annual average concentrations resulting from the basic energy park configuration. The maximum concentration is about 32.4 $\mu g/m^3$, about 12 times the maximum for a single source. This was expected due to the small spacing between the units and the relatively large distance at which the maximum concentration occurred. Figure 1/2.7-34 shows the results of applying the uniform wind rose to the basic energy park configuration. The maximum concentration under these conditions is about 96.5 $\mu g/m^3$. This large increase is due to the small distance between the units and the fact that the uniform wind rose produces maximum concentrations in the vicinity of the source.

Spread Out Park. Using the same approach, Figures 1/2.7-35 through 1/2.7-37 were constructed for the spread out park. For the Rochester, New York wind rose the maximum concentration is slightly less than what occurred with the basic energy park due to the increase distance between pairs. This spacing also reduced the sensitivity to changes in meteorological conditions. Using the uniform wind rose for the spread out park caused the maximum concentrations to increase by less than a factor of two.

Dispersed Distribution. The concentrations resulting from our approximation of dispersed siting of units are shown in Figures 1/2.7-38 and 1/2.7-39. For the Rochester, New York wind rose, increasing the spacing between pairs to

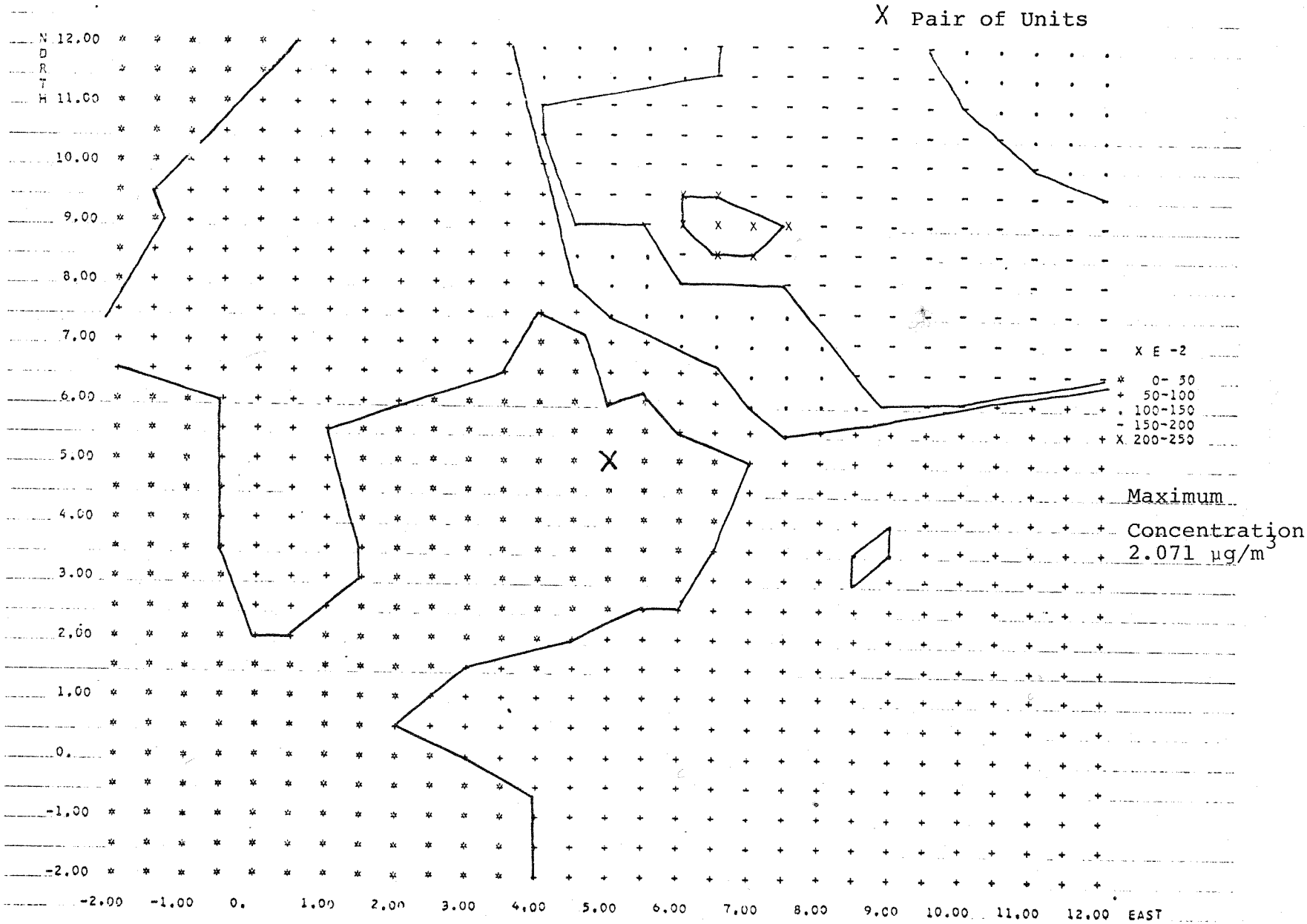

FIGURE 1/2.7-29 - Single Source - Isopleths of Annual Average Ground Level Concentrations, Rochester Wind Rose, Park Vicinity

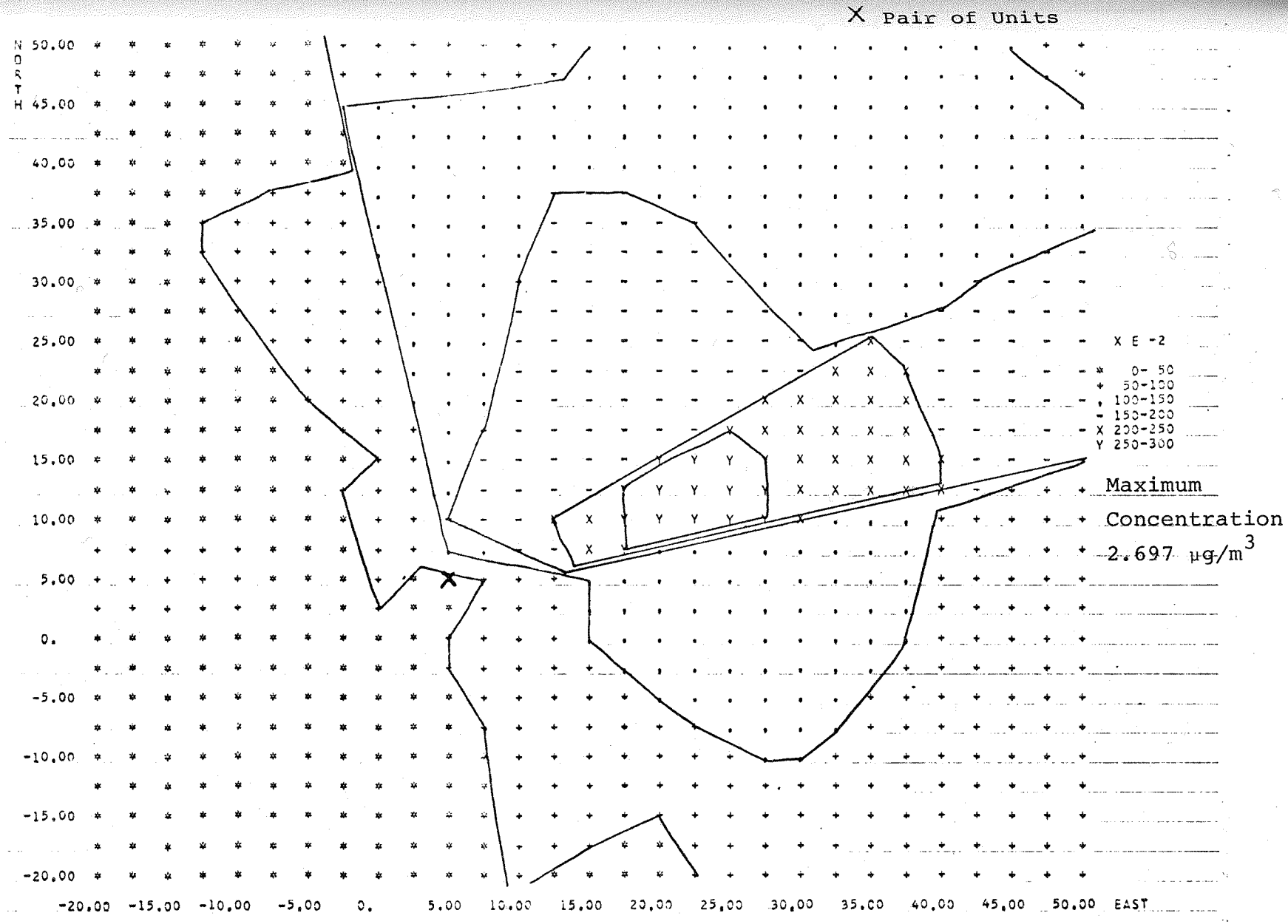

FIGURE 1/2.7-30 - Single Source - Isopleths of Annual Average Ground Level Concentrations, Rochester Wind Rose, Long Range View

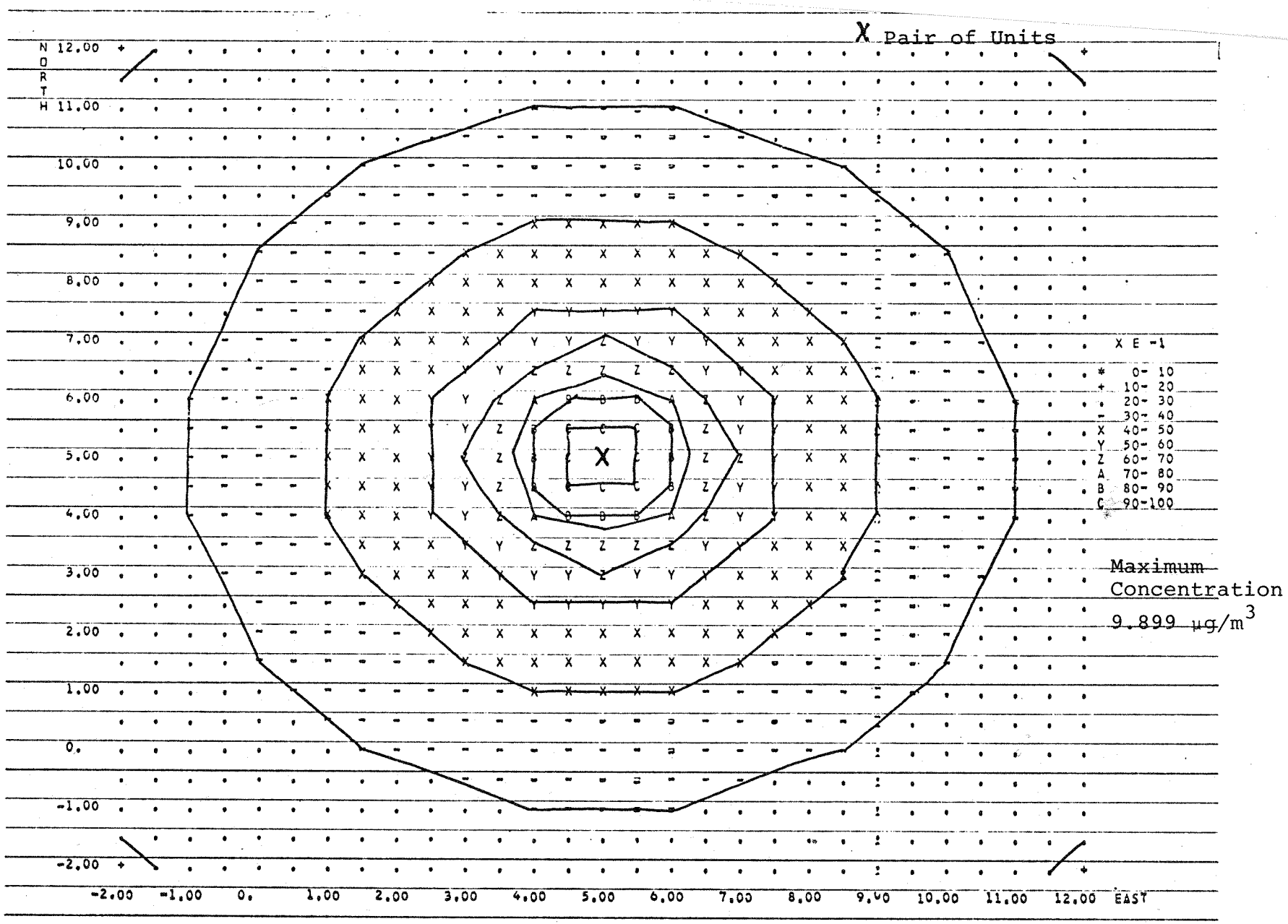

FIGURE 1/2.7-31 - Single Source - Isopleths of Annual Average Ground Level Concentration Uniform Wind Rose, Park Vicinity

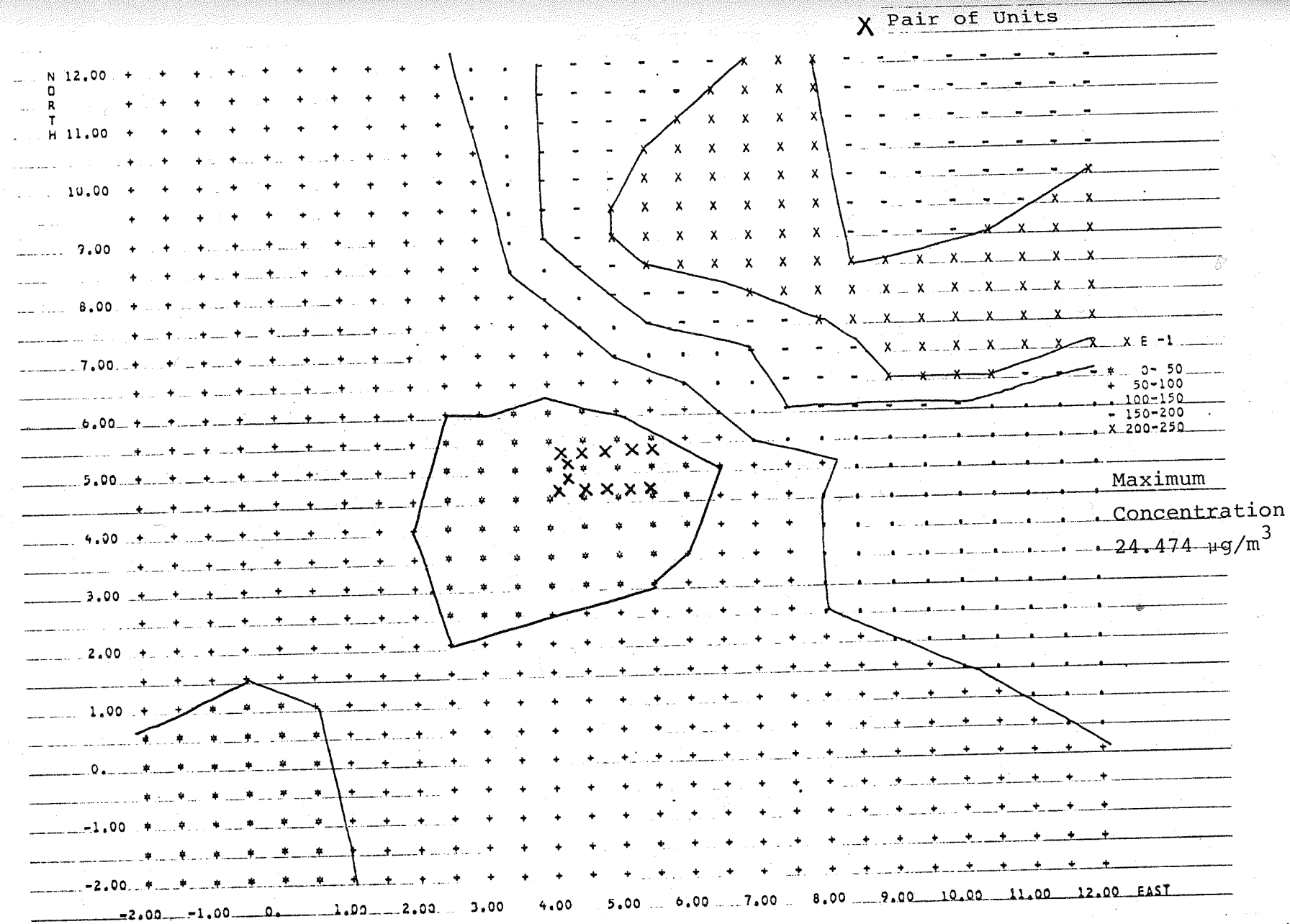

FIGURE 1/2.7-32 - Basic Energy Park - Isopleths of Average Annual Ground Level Concentrations, Rochester Wind Rose, Park Vicinity

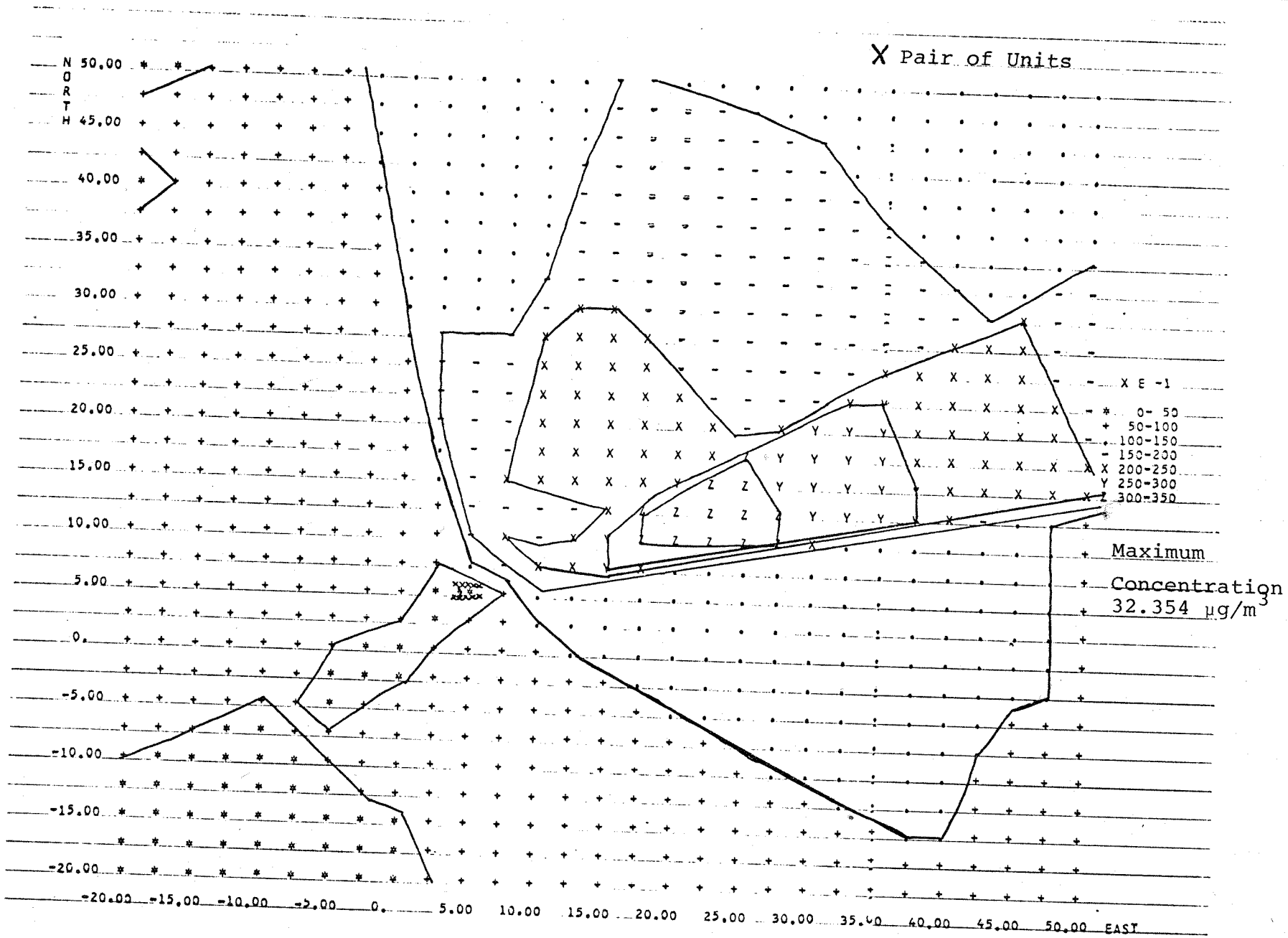

FIGURE 1/2.7-33 - Basic Energy Park - Isopleths of Annual Average Ground Level Concentrations, Rochester Wind Rose, Long Range View

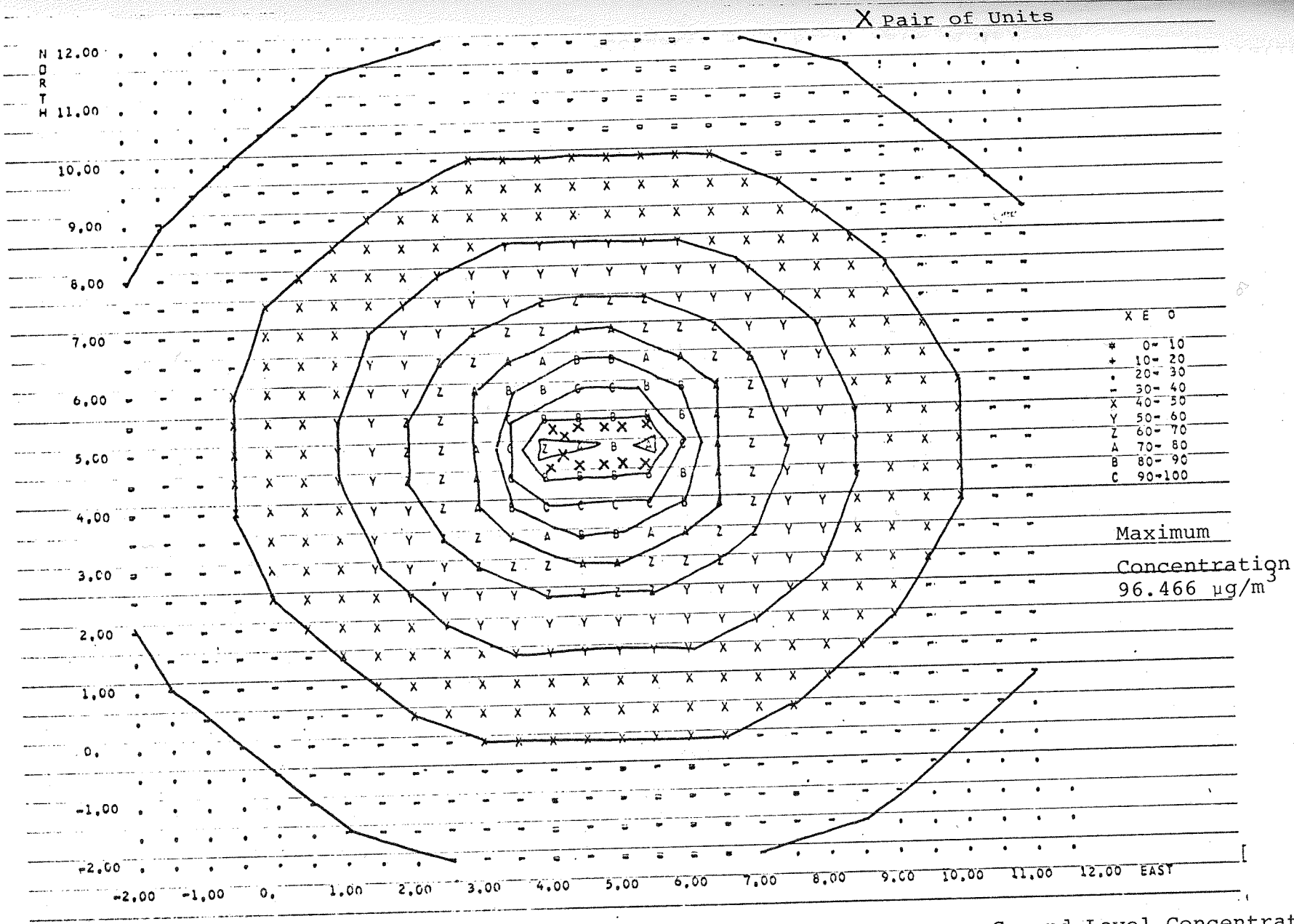

FIGURE 1/2.7-34 - Basic Energy Park - Isopleths of Annual Average Ground Level Concentrations, Uniform Wind Rose, Park Vicinity

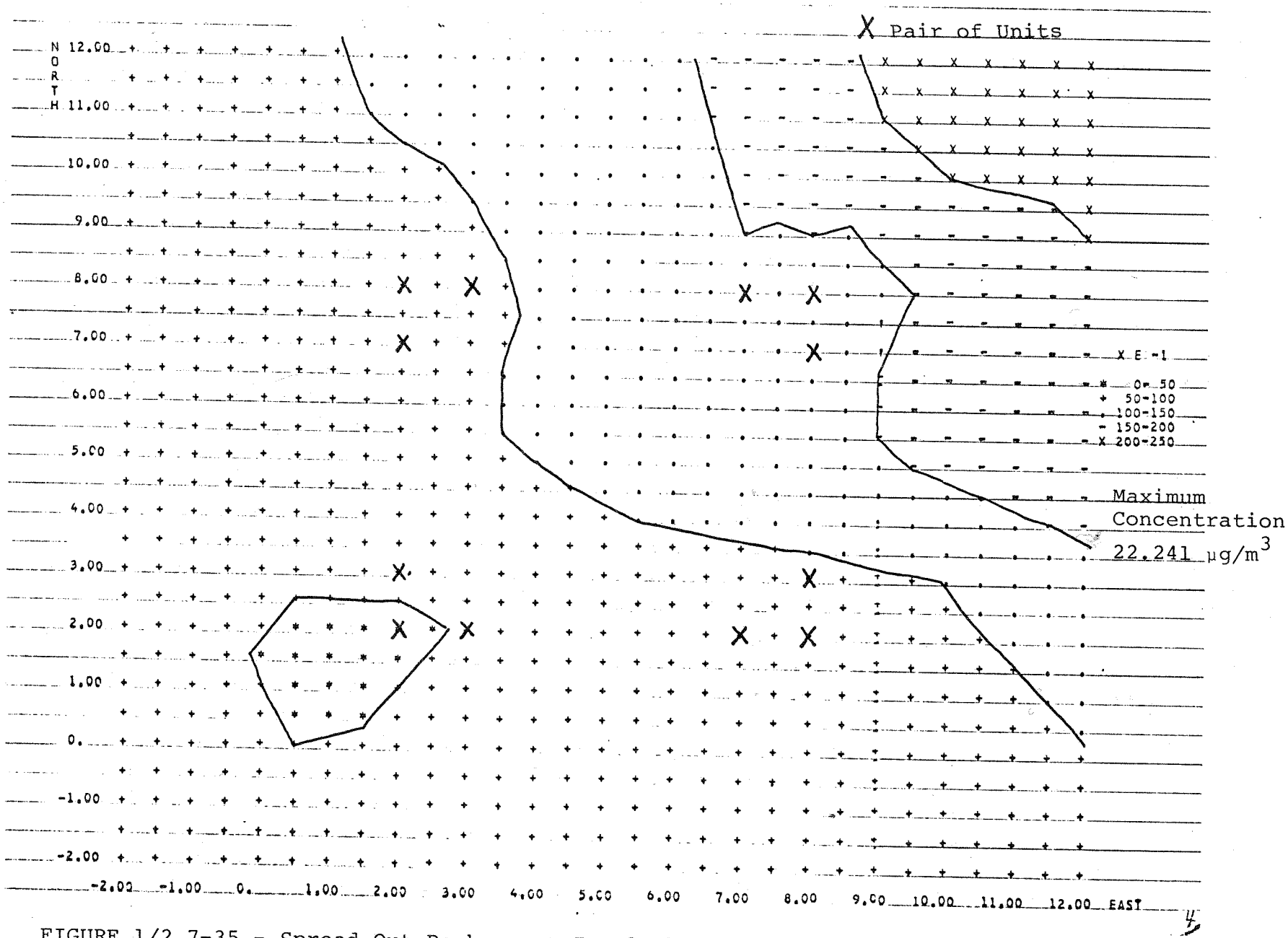

FIGURE 1/2.7-35 - Spread Out Park - Isopleths of Annual Average Ground Level Concentrations, Rochester Wind Rose, Park Vicinity

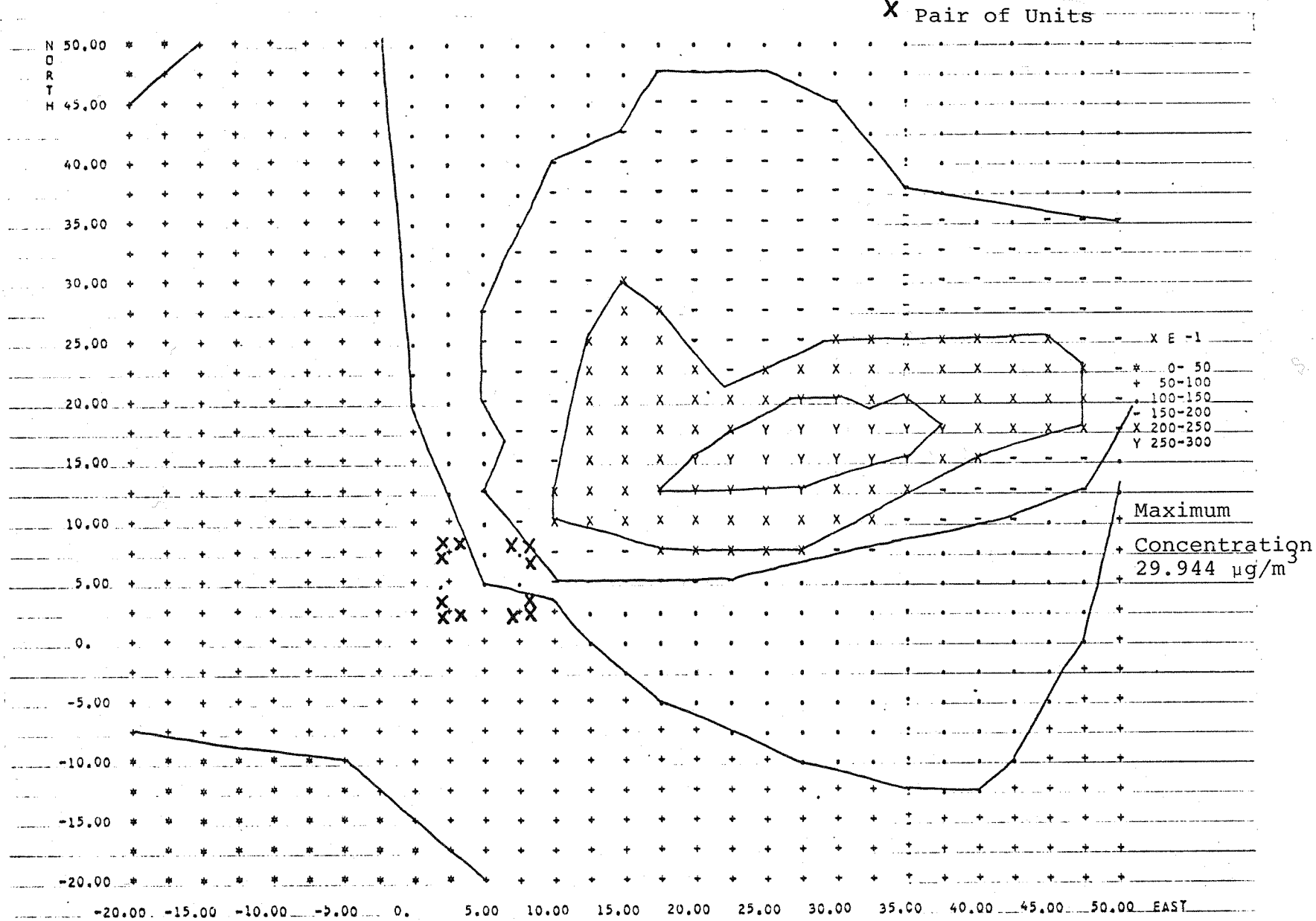

FIGURE 1/2.7-36 - Spread Out Park - Isopleths of Annual Average Ground Level Concentrations, Rochester Wind Rose, Long Range View

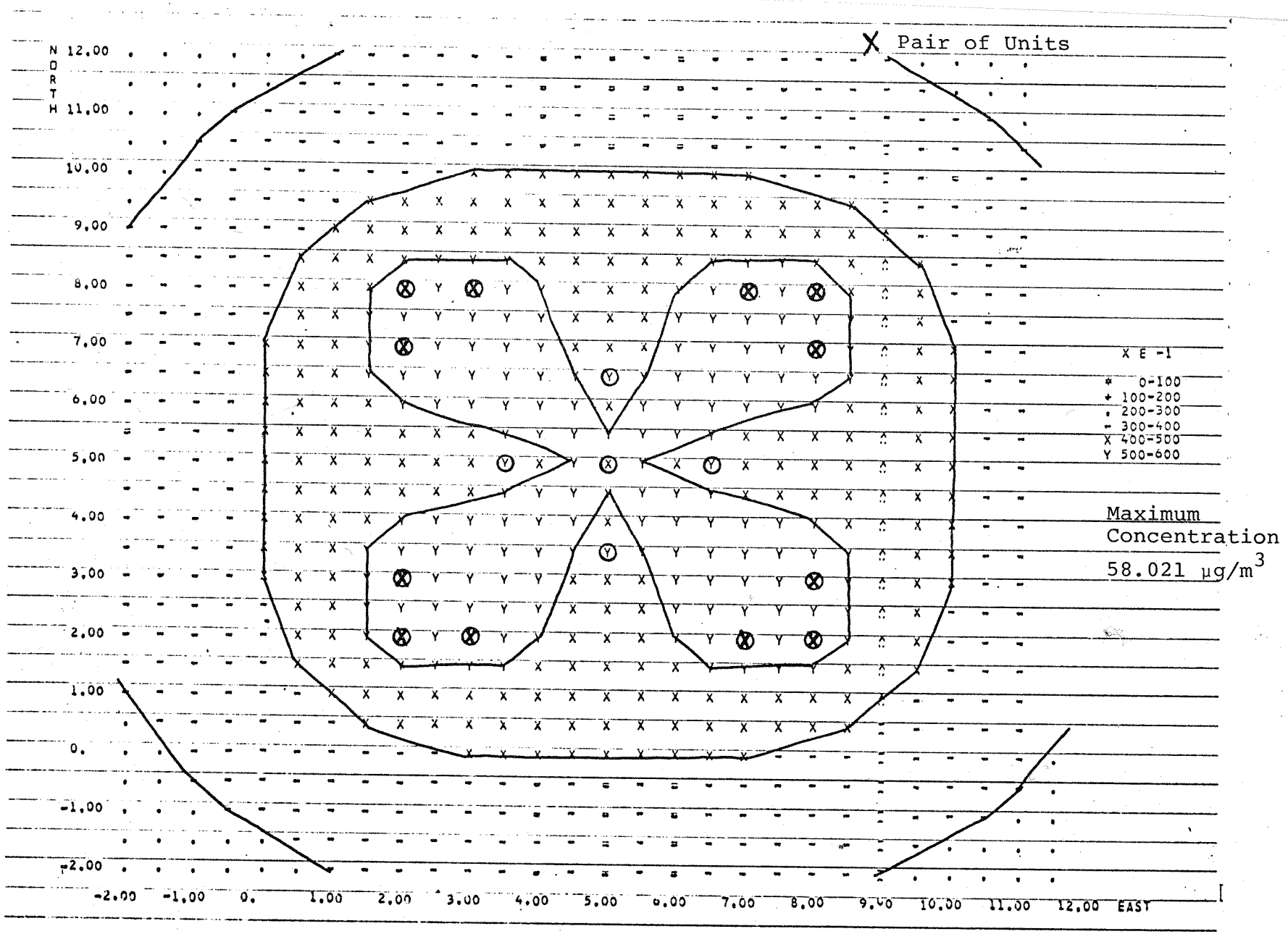

FIGURE 1/2.7-37 - Spread Out Park - Isopleths of Annual Average Ground Level Concentrations, Uniform Wind Rose, Park Vicinity

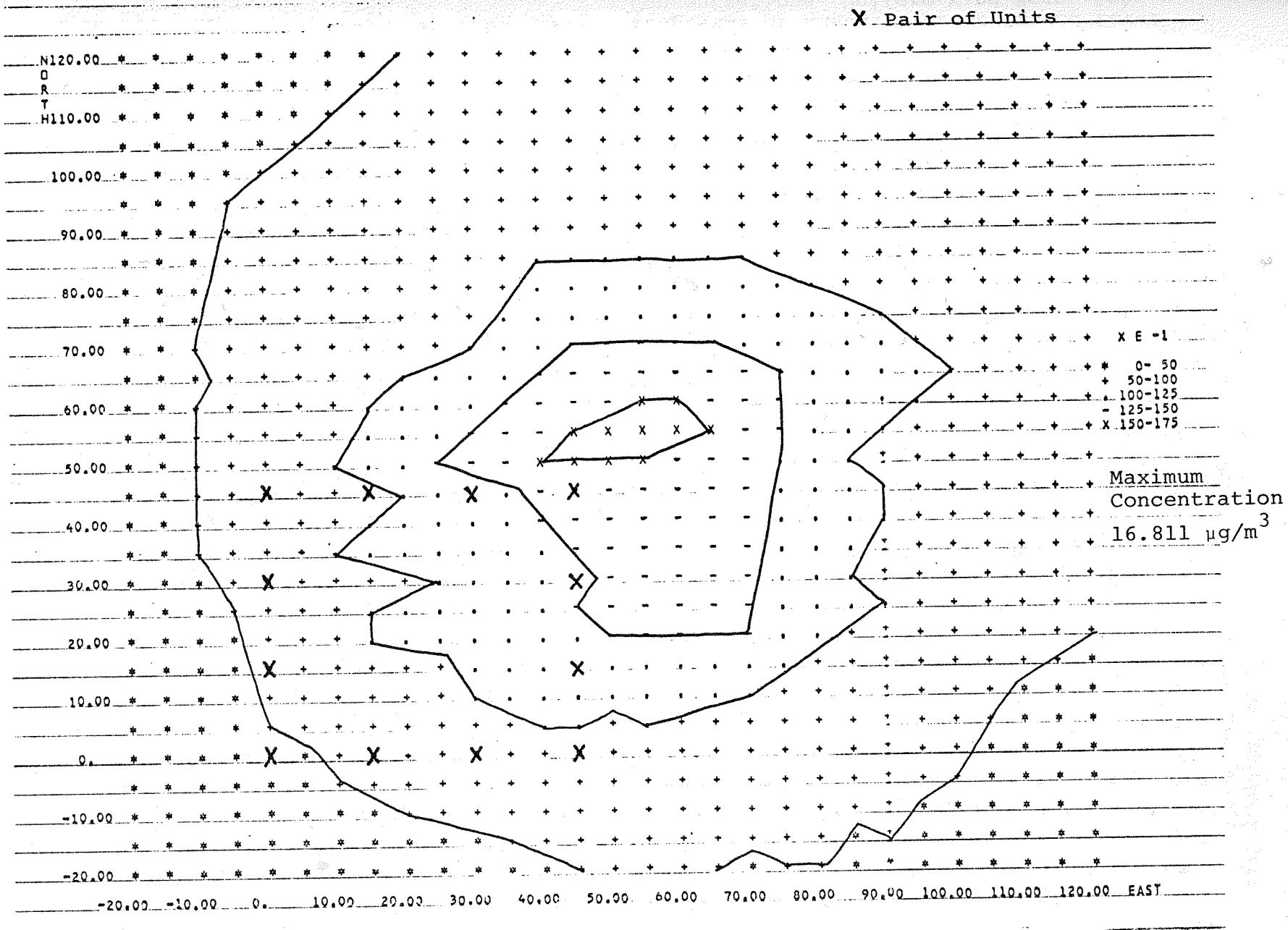

FIGURE 1/2.7-38 - Dispersed Distribution - Isopleths of Annual Average Ground Level Concentrations, Rochester Wind Rose, Long Range View

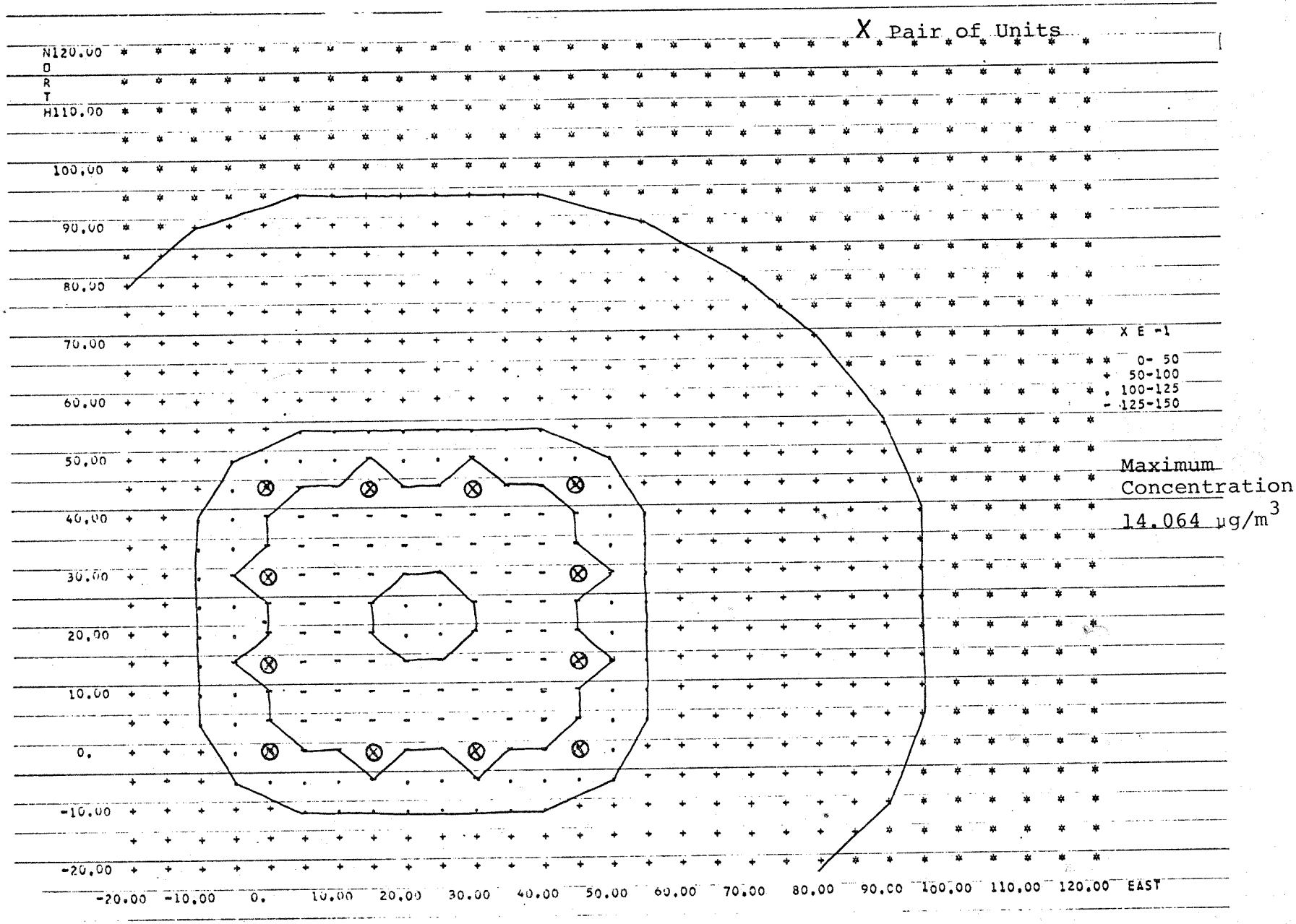

FIGURE 1/2.7-39 - Dispersed Distribution - Isopleths of Annual Average Ground Level Concentrations, Uniform Wind Rose, Long Range View

15 miles caused the maximum concentration to be roughly half of the maximum for either energy park. Using the uniform wind rose resulted in only a slight change in the maximum concentration, with the numerical value decreasing by about 16%.

Results. Table 1/2.7-13 shows the maximum annual average ground level concentrations for the four configurations studied for both of the wind roses used. Also shown is the ratio of the maximum concentrations from each wind rose. As can be seen, for a site with typical meteorological conditions (i.e. Rochester wind rose) there is no danger of ever exceeding any of the annual concentration limits defined in the ambient air quality standards. The sensitivity of these results to changes in meteorological conditions appears to be largely a factor of the spacing between the units, as shown by the results for the uniform wind rose.

Maximum Annual Avg. Conc. ($\mu g/m^3$)	Rochester Wind Rose	Uniform Wind Rose	Uniform / Rochester
Single Source	2.7	9.9	3.67
Basic Energy Park	32.4	96.5	2.98
Spread Out Park	29.4	58.0	1.97
Dispersed Siting	16.8	14.1	0.84
Primary Standard = 80 $\mu g/m^3$ Secondary Standard = 60 $\mu g/m^3$			

TABLE 1/2.7-13 COMPARISON OF ANNUAL AVERAGE CONCENTRATIONS

In general, since most areas have a prevailing wind direction and weather conditions usually classified as stability class 3 or 4, it is safe to assume that if the units are meeting the national emission standards then there are no restrictions placed on the park due to the maximum annual average concentrations defined in the ambient air quality standards.

1/2.8 COOLING MODE CONSIDERATIONS

Heat discharged from a given power plant to the cooling water must eventually be dissipated to the atmosphere where it radiates to space. The method of such disposal depends on the type of cooling system used.

The amount of heat discharged to the condensers is related to the plant heat rate. In an efficient fossil-fired plant, about 40% of the input energy is converted to electricity. About 45% is discharged to the cooling water and the remaining 15% is lost in the plant, in the stack, and in the ash. Because of the lower steam temperature and pressure, present nuclear plants have lower efficiencies, about 33%. In such plants, approximately 62% of the input energy is discharged to the cooling water via the condenser and the remaining 5% is lost in the plant. Thus, the nuclear plants now discharged about 40% more energy directly to the cooling water than fossil plants. The development of the fast breeder reactor will, however, push toward higher steam conditions with resulting efficiencies approaching those of new fossil plants.

The cooling modes considered for comparison studies in this report include cooling ponds, once through (river) cooling, evaporative cooling towers and dry cooling towers. Table 1/2.8-1 shows the water requirements for each type of plant based on the consumption characteristics of each plant's cooling mode and the total MW rating at 70% plant capacity factor.

The estimates of capital costs found in Section 1/2.5, and land requirements and water requirements contained in Section 1/2.4 are made on the basis of a natural draft evaporative cooling tower with a small make-up pond as the heat rejection mode. In addition, some of the park layouts were drawn showing cooling ponds. If the land and water source to create ponds are available this mode would cost least and have the lowest back pressure for best turbine performance. These ponds are considered to be owned by the park or dispersed site owner and must be

TABLE 1/2.8-1

CONSUMPTIVE WATER REQUIREMENTS

$10^9 \frac{GAL}{YEAR} / 10^6 \frac{ACRE\text{-}FT}{YEAR}$

FOSSIL PLANTS

Cooling Mode	Dispersed Sites 2-885 MW Units	Dispersed Sites 2-1075 MW Units	Dispersed Sites 2-1320 MW Units	Energy Park 26,240 MW
Once Through	3.2/.010	3.9/.012	4.8/.015	47.5/.146
Pond	5.5/.017	6.6/.020	8.2/.025	81.1/.249
Evaporative Tower	4.6/.014	5.5/.017	6.8/.021	67.7/.208
Dry Tower	.07/.0002	.08/.0002	.1/.0003	1.0/.003
Dry Tower/Peak Shaving	.2/.0006	.24/.0007	.3/.0009	2.9/.009

NUCLEAR PLANTS

	Dispersed Site 2-1300 MW Units	Mini Park 4-1300 MW Units	Energy Park 26,000 MW
Once Through	6.7/.021	13.5/.041	67.3/.206
Pond	11.5/.035	23.0/.071	115.0/.352
Evaporative Tower	9.6/.029	19.2/.059	95.9/.294
Dry Tower	.1/.0003	.2/.0006	1.0/.003
Dry Tower/Peak Shaving	.3/.0009	.6/.002	2.9/.009

Includes Water for in-plant service. Based on 70% capacity factor.

located near an economic source of make-up water. The question as to whether such a dedicated pond becomes subject to Federal Water Pollution Control Standards is not answered by this report.[37] Alternate cooling modes are possible in any case and this section will discuss each of these possibilities briefly. In this section, cost increments and efficiency penalties are given for the alternate heat rejection modes.

Although numbers are provided for once through cooling, present Federal Water Quality Standards will limit once through cooling applications in the future due to restrictions on the allowable temperature rise for the discharge water body.

The cost numbers provided for the various cooling modes include condensers, pumps, piping, valves, and other essential items of the cooling water system. Differences in cost and respective heat rates of the various cooling systems are listed in Table 1/2.8-2.

1/2.8.1 Cooling Ponds

In those areas where sufficient land is available and land costs are not exorbitant, large cooling ponds provide an economic method of closed cycle or supplementary cooling. Heat rejected in the steam condenser to the circulating water is conveyed to the lake or pond and is dissipated from the water surface. Generally, the cooling lake for

a nuclear plant is sized at approximately one and one half to two acres of surface area per MW of generating capacity. For fossil plants, one acre of surface area for each MW of generating capacity is assumed.

Insofar as plant operation is concerned, the inherent thermal inertia of the cooling pond prevents the rapid swings in inlet temperature which characterize a cooling tower's interaction with daily meteorological changes. Thus, the full impact of the hottest outdoor temperature can be delayed so that plant output can be sustained through the peak generation period associated with summer air-conditioning loads. In addition, the thermal inertia and the large supply of stored water represented by the cooling pond represent a safeguard against a temporary failure of the water supply system. This could be an important advantage of a large power center located some distance from the source of make-up water.[33]

For a 20°F temperature change made by a cooling system (range) when the lowest temperature attained above ambient wet bulb temperature (approach) is also 20°F, a pond loading of 10^7 BTU/hr per acre would be possible during the summer. This loading would produce an evaporation rate of 2.3 ft. per month.

Other advantages of cooling ponds may include the potential for water-based recreation, the enhancement of surrounding property values, and the possible joint use with other industries or municipalities.

The effectiveness of cooling ponds can be augmented by the use of either a hot pond or a spray pond.

The hot pond operates at a temperature in the vicinity of 120°F, sacrificing turbine efficiency for land economy. Turbine back pressures obtained with this 120°F cooling water on the order of 5" HgA. This back pressure is within the design limitations of standard turbine units normally operating at 1.5" HgA. The pond acreage is reduced to approximately one-fourth the size of a "normal" pond. This is due to the fact that less pond surface cooling is required for a hot pond when compared to a "normal pond."

Spray technology is an old art that is becoming a new science. One company sells modules that float in cooling canals and spray water when their pumps are activated. The affect of spraying induces strong thermal gradients in still air increasing both the heat transfer coefficient between the

cooling air and the spray pond and the effective surface area of water to be cooled. This results in a pond one-half the size of a "normal" pond with a condenser cooling capability equivalent to a wet evaporative cooling tower under still air conditions.

1/2.8.2 Once-Through Cooling

Generally, the once-through circulating system is the least expensive of the several types of cooling systems in use today. Utilities have used this method of providing circulating water whenever conditions permit.

If Philadelphia is chosen as a typical example location for this method of heat rejection, the following results are obtained. River cooling at Philadelphia is based on 75°F maximum initial cooling water (river) temperature, a 16°F rise in temperature in the heat exchanger, a final cooling water temperature of 91°F, 7°F below the maximum of 98°F permitted for return to the river. The corresponding condenser pressure of 1.8 inches of mercury would result in no loss of generating capacity and no demand kilowatt charges in the hottest weather. The pump head was assigned as 21 feet for this calculation.

As one might expect the pumping power for once-through cooling is small, on the order of 1.7MW (for 700MW plant). As mentioned previously, although once-through cooling is the least costly alternative, it is highly unlikely that it will be permitted in the future.

1/2.8.3 Evaporative Cooling Towers

Where sufficient water is not available for a once-through circulating water system, an evaporative (wet-type) cooling tower is often used to dissipate the heat as it is pumped through the condenser. Most of the cooling is performed by evaporation which produces heated saturated air. It is this evaporation which causes the plume or fog associated with this type of tower. Evaporative cooling towers are either of the cross-flow design in which air flows horizontally through the falling water, or the counter-flow design in which air flows upward through the falling water. The driving force for moving air through the cooling tower can be either motor-driven fans, mechanical draft, or the thermal lift obtained by the use of a natural draft tower.

The cooling water conditions assigned for this evaluation are a pump head of 75 feet, a water cooling range of 26°F,

TABLE 1/2.8-2

INCREMENTAL COSTS AND EFFICIENCY PENALTIES

FOR ALTERNATE COOLING MODES

Cooling Mode	Incremental Cost 1975 $/Kw	Typical Nuclear Plant Efficiency
Evaporative Natural Draft Tower	Base Case *	32.7
Evaporative Mechanical Draft Tower	-5 to -6	32.6
Cooling Pond	-5 to -8	32.8
Once Through (River)	-7.5 to -11	32.9
Dry Tower - Mechanical Draft	+7 to +17	28.1
Dry Tower - Natural Draft	+22 to +45	28.6
Dry Tower - Natural Draft With Peak Shaving	+23 to +46	~30.0

Note: There will be cost differences for nuclear and fossil plants due to the differences in heat rejected to the cooling medium per KW output. Caution must be used in comparing these numbers with those contained in other references to be sure the scope is equivalent.

*Base case considered is an evaporative natural draft cooling tower. Costs include complete condenser and cooling system installed.

This table is continued on the next page to show more specific detail on various cooling systems. The information on the next page is from a preliminary report from the Pennsylvania Energy Park Study.

TABLE 1/2.8-2 (CONTINUED)*

COMPARATIVE COOLING SYSTEM PARAMETERS

	FOSSIL/HTGR - 800 MW				BWR/PWR - 1000 MW			
	Once Thru	Wet Mechanical	Wet Natural	Dry (Mech) (4)	Once Thru	Wet Mechanical	Wet Natural	Dry (Mech) (4)
Capital Cost ($/Kw) 1974 DOLLARS (1)								
. Cooling Tower/Cond.	4-8	8-10	10-14	31-44	5-9	10-13	13-18	44-57
. Turbine/Generator (2)	Base	Base	Base	+3%	Base	Base	Base	+15%
Lost Capacity (Due to Higher Back Press) (3)	Base	1%	1%	9%	Base	1%	1%	15%-PWR 17%-BWR
Loss in Efficiency (Increased Heat Rate) (3)	Base	1%	1%	10%	Base	1%	1%	15%-PWR 17%-BWR
Auxiliary Power Consumption (5)	Base	0.5%	0.25%	1.25%	Base	0.8%	0.4%	2%
Land Requirement (Acres)	-	3-5	2-3	5-7	-	5-7	3-5	7-10

(1) Based on data appearing in Power Plant Cycles for Dry Cooling Towers - Leung & Moore - Journal of the Power Division, Proc. of the Amer. Soc. of Civil Eng., Dec. '71: escalated to '74 @ 8%.

(2) Based on GE Marketing Information letter: MIL - 946 (11/29/71) and MIL -1017 (2/26/73). Differential on equipment cost only. No differential anticipated on erection costs.

(3) Based on various reports, studies, and manufacturer's information.

(4) For a discussion of the commercial availability of high back pressure turbines see accompanying information.

(5) These land requirements are for comparative purposes only, not to calculate total station land needs

*This information is from a Preliminary Report of the Pennsylvania Energy Park Study.

a cold water approach to air wet bulb of 13°F, and a terminal temperature difference for condenser to hot water of 5°F. For Philadelphia, an example chosen previously, the design 5% wet bulb temperature was 75°F, and the 1% temperature for demand penalty assessment (loss of capability) was 79°F.

Mechanical Draft (Wet) Towers - Mechanical draft cooling towers are either forced or induced draft design. Forced draft towers have the fan at the bottom of the tower, induced at the top.

The fan power for the mechanical draft tower is roughly one quarter of the total power needed for cooling.

Again, using Philadelphia as a reference, the design condenser temperature would be 120°F (3.45 inches of mercury).

Mechanical draft fan towers are still the major type chosen with natural draft being primarily in the east where higher humidity assures buoyancy.

Natural Draft - Natural draft or hyperbolic cooling towers use the density difference between warm moist air in the tower and cooler ambient air outside the tower to create a draft in the tower shell. This determines the air velocity through the tower. Towers as high as 500 ft. have been employed on large capacity stations.

The natural draft towers present essentially the same turbine back pressure conditions as do the mechanical draft towers. The major differences are the larger size in the case of the natural draft wet tower and the need for fans in the mechanical draft towers.

For the application using evaporative cooling towers, a complementary cooling pond will be necessary if the source of make-up water is a natural river in order to maintain cooling during periods when the river flow is too low to permit drawing 2 to 5% of its through-flow for make-up.

For this study, cost estimates provided for both nuclear and fossil power plants include the costs of natural draft cooling towers. Increments are provided in Table 1/2.8-2 to enable the reader to determine an approximate plant cost when one of the alternate cooling modes is chosen. The complementary cooling pond needed to assure enough water during low flow periods for the make-up source is approximately 8% of a full-sized cooling pond that does not have sprays and is not considered a hot pond.

1/2.8.4 Dry Cooling Towers

In cases where evaporative cooling towers may not be a totally acceptable solution at a particular site due to visible plume discharge, make up water availability, environmental icing and concern about carry-over, dry towers are sometimes called for although they may require special turbines designed to operate at the higher back pressures. Such turbines are not yet designed for nuclear applications and are yet to be proven in the field for fossil application.

The optimum application of dry cooling towers to steam power plants has been detailed by Rossie, Smith, and Larinoff, and Leung.[34, 35, 36] They generally find the most favorable Initial Temperature Difference (ITD), the condensing steam temperature minus ambient air temperature, to be in the range of 50°F to 60°F. The back pressure would be in the range of 7 to 11" HgA. A less than optimum ITD, 45°F, was selected for this study. By assigning a 45°F ITD a conventional steam turbine is retained, and the various costs and component performances are made more certain. At the 5% design point dry bulb air temperature of 88°F the condenser would be at 133°F (turbine back pressure of 4.9 inches of mercury). If the ambient air reaches the demand penalty point of 93°F the condenser temperature at full steam flow would rise to 138°F (7.2 inches of mercury turbine back pressure). At and above the demand penalty point, load must be reduced, i.e., generated power must be decreased to avoid exceeding machinery limits. This condition would be expected to occur approximately 1% of the time, about 30 hours per year, when either demands are not satisfied or alternate peaking power supplies must be used. Special, high back pressure turbines could be used with decreased efficiency or reduction of steam flow, and other generated power would be necessary to reduce this extreme condenser condition for conventional turbine equipment.

The conventional dry cooling tower is suspended 115 ft. above ground in continuous sections like a vast canopy. Atop the heat exchange sections are the fans and motors. In contrast, the designs for natural draft cooling stand the heat exchanger surfaces on edge and then accordion pleat them around the base of the tower. Thus, land area requirements are nearly equal.

The cost of dry towers is based chiefly on the work by R. W. Beck Associates.[35] The cost range included in Figure 1/2.8-2 for dry cooling towers is wide enough to include

both fossil plants (60% of the heat rejection of a nuclear plant for the same MW rating) and nuclear plants.

The natural draft tower costs are based primarily on North Eastern applications and the mechanical draft towers are deduced from average conditions. The regional variation in tower costs is approximately 15%. Reference 36 contains some work on reduction of height and heat transfer surface of dry towers and the possible impact of this on the cost of dry towers.

1/2.8.5 Dry Cooling Towers with Peak Shaving

The design air temperature for cooling towers cannot be far below the maximums for a region or there would be an inordinate loss of plant capability coincident with summer peak load demands for plant utilizing conventional turbines. The basis of selection is usually that temperature exceeded 5% of summer hours, 150 hours, for design; the loss of capability (demand penalty) is most often assessed at the temperature exceeded 1% of summer hours, or 30 hours.

Since both wet cooling towers and dry cooling towers may operate with an ITD of 45°F, condensing steam temperature minus cooling air ambient temperature, a comparison can be made between an arid and a temperate location depicting design and demand penalty conditions. Table 1/2.8-3 depicts these conditions for each respective location.

The loss of capacity would be most extreme for the arid location where dry cooling towers are generally most favored. Even in the temperate location, the dry cooling tower would violate operating levels most conducive to high reliability for conventional steam turbines.

These data show that a dry cooling tower that could work toward the wet bulb temperature during peak temperature periods would substantially reduce the plant demand penalty while avoiding high turbine back pressures that tend to reduce reliability. This type operation can be achieved by spray humidification of the air entering the dry tower, or by spray wetting of the heat exchange surfaces. Both processes are proven technology for air conditioning and the process industries. They have not been applied yet to utility power plants.

The use of spray humidification presents an economic means to curtail the adverse effects of high turbine back pressure and loss of plant output coincident with maximum summer power demand.

TABLE 1/2.8-3

SUMMER AMBIENT CONDITIONS

	5% (150 Hours)	1% (30 Hours)
Phoenix, Arizona		
Air Temperature	104F	108F
Wet Bulb Temperature	75F	77F
Philadelphia, Pa.		
Air Temperature	87F	93F
Wet Bulb Temperature	76F	78F

CONDENSING STEAM CONDITIONS, 45°F ITD

	5% (150 Hours)	1% (30 Hours)
Phoenix, Arizona		
Dry Tower	149F, 7.4" Hg*	153F, 8.2" Hg*
Wet Tower	120F, 3.5" Hg	122F, 3.6" Hg
Philadelphia, Pa.		
Dry Tower	132F, 4.8" Hg	138F, 5.6" Hg*
Wet Tower	121F, 3.5" Hg	123F, 3.7" Hg

* Exceeds 5" Hg (134F) limit for conventional steam turbine operation.

Estimates indicate that in Philadelphia, peak shaving by spray humidification of the air drawn through a dry cooling tower would result in net savings through the entire 150 hours that temperatures exceed the design point. The amount of water to be consumed, 80 million gallons, is of the order of three times the 22 million gallons per year required for normal operation of the steam power plant with dry cooling towers.[5,31,33]

The cost of the increment of water consumed tends to be offset by the value of the reduced kilowatt demand penalty and by the reduction in fuel oil or gas used to generate the substitute kilowatt hours of demand energy. There is further benefit due to the improved efficiency resulting from the lower back pressure plus the fact that conventional turbine units (as opposed to special high back pressure units) have reduced leaving loss in the 1 to 5" HgA range.

1/2.8.6 Water Consumption

There is a great confusion about the water consumed for the generation of power. For steam plants, an in-plant use has been assigned as 0.01 gallons per kilowatt hour. For evaporative cooling, the value of 0.5 gallons per kilowatt hour is appropriate. The additional water that flows through the system (including any cooling tower blow down) was not attributed to consumption. Such water would be treated and returned to the water source or to ground water.

For once through cooling, there is induced evaporation of the heated water after it returns to the river. This is surprisingly large (see Figure 1/2.8-1) but less than that found at a cooling tower due to the added effect of radiation cooling and the reduced vapor pressure of water at a temperature lower than that typical of cooling towers.

The cooling pond would be intermediate between once through cooling and the cooling tower if the natural evaporation were not assessed against it. The natural evaporation, that which would occur even with the power plant inoperative, adds an appreciable increment.

The use of a water spray to bring hot ambient air down toward the existing wet bulb temperature depends on evaporative cooling for its chilling effect. The effects are such that even with extremly costly water (2 dollars per thousand gallons) one would use such a system extensively but only during the hottest weather. The total water con-

sumption for this use was divided by the total kilowatt hours generated in a year to describe the average water consumption.

All plants must have some water service for ordinary plant needs, and also to service small evaporative cooling towers for generator cooling at dry sites. The use of peak shaving for a dry cooling tower increases annual water use by a factor of three as compared to a totally dry steam plant. Once through is the least consumptive wet heat sink followed by the evaporative cooling tower and then by cooling ponds. All of the wet cooling modes have cooling water consumptions of a comparable order of magnitude. Both at Phoenix, Arizona and at Orlando, Florida use of municipal sewage effluent is planned to meet all of the consumptive water needs for the power generation. In a previous study of cooling for nuclear power parks it was ascertained that make-up water for evaporative cooling towers or ponds could be piped overland great distances (15 to 30 miles) at costs less than the electrical transmission costs for comparable distances. This suggest that nuclear power park site be biased somewhat toward the center of power consumption rather than adjacent to the water source.

Where water must be purchased, the increment to the cost of power generation is one mill per kilowatt hour for consumption of one gallon per kilowatt hour when water costs one dollar per thousand gallons.

In summary, various cooling modes which are possible for park application have been discussed. The "base" case for cost estimates has been the hyperbolic natural draft cooling tower. The prime alternate is cooling ponds. The ultimate choice for an energy park will depend on the climatological conditions, site terrain, and water availability. Plume interractions from a large number of cooling towers may or may not be a problem depending upon their relative positions to one another. Additional research into the environmental effects of cooling systems for energy parks is necessary. More discussion on water requirements for energy parks is contained in Task 7, Environmental Overview.

1/2.9 FOSSIL FUEL CYCLE CONSIDERATIONS FOR ENERGY PARKS AND DUAL UNIT DISPERSED SITES

There is widespread agreement among electric utility experts that coal will be the dominant fuel for the indefinite future. The utility industry could be burning somewhere between 650 million and 800 million tons of coal a year by 1985 depending upon whose predictions of future demand one believes. For comparison purposes the 1973 consumption by the electric utility industry was 390 million tons. So the forecasts show approximately doubled consumption in the next decade.

A companion of this large increase in the consumption of coal is the necessity to transport the coal from the mine to the plant.

This Section, 1/2.9, will consider those aspects of burning coal that will affect the comparison of coal fired energy parks to coal fired dual unit dispersed sites. Among these aspects will be transportation modes, mine mouth costs, heat content, sulfur content, handling considerations, investments required to provide new transportation, transportation costs, and coal quantities required for the types of plants being considered in this study.

1/2.9.1 Coal Quantities Required

The quantities of coal required for the power plants being considered in this study depend on the heat rate for the power plants, the heat content of the particular coal being burned, and the capacity factor at which the individual unit is operated. For this study which is non-site specific the base case assumes that the coal has a heat content of 12,000 BTU/lb which would be close to the average unit heat value of bituminous coal and lignite produced and consumed in the United States in 1973. Later in this section a discussion of units burning lignite with a much lower heating value will be included. The 12,000 BTU/lb will be considered to be eastern high sulfur (35%) bitumous coal for the purposes of this study. This leads to the necessity of equipping the units with flue gas desulfurization equipment and providing for sludge disposal.

As was discussed in Section 1/2.3, this study considers fossil units with ratings of 885MW, 1075MW and 1320MW. The performance of these units lead to assumed station heat rates of 8984, 8993, and 9019 respectively.

For the purposes of sensitivity analysis three values of capacity factor will be assumed. These are .65, .75 and .85.

A summary of the quantities of coal required for the dual unit dispersed sites and for the 24-unit energy park is given in Table 1/2.9-1. This table shows that, for the largest dual unit dispersed site, between 5.6 to 7.4 million tons of coal a year would be required. This quantity is not different significantly from quantities being hauled to a single power plant today. For example, Detroit Edison's Monroe Michigan Plant uses 6 million tons per year. For the energy park, coal consumption is indicated as a function of the number of units on line. After four 885MW units have been completed in 1988, the park will be burning between 7.8 and 9.8 million tons a year and when all eight 885MW units have been fired in 1992 the consumption will rise to between 15.2 and 19.6 million tons a year. When all 24 units are on line in 2008, the coal consumed will be between an enormous 55 and 73 million tons per year. One important fact this table indicates is that if such a large coal fired energy park were built, the coal hauling industry would have a period of thirty-three years from now in which to build up to these ultimate capacity requirements. If this were not the case one would have to conclude without any reservation that hauling 60 million tons of coal a year to a single location would be next to impossible when you consider that the entire C&O; B&O Railroad System hauls about 60 million tons of coal a year over the vast area those railroads service.

The last quantities indicated on Table 1/2.9-1 are the numbers of unit trains per day required to haul this coal to the power plants assuming that a unit train is comprised of 100 hopper cars each containing 100 tons of coal for a total of 10,000 tons per train. The unit train calculations were made assuming 365 days per year. If trains only arrive on 250 working days per year the number per day would increase 46%. It should also be noted that numbers like 1.4 unit trains per day are for comparison only and that unit trains would only come as units, i.e. 1, 2, or 3 trains per day.

1/2.9.2 Coal Costs Assumed

Because this comparison study between coal fired energy parks and dual unit dispersed sites includes a comparison of the production costs for delivering the power, it is necessary to assume some value for the cost of coal. Since the late 1973 energy crisis, coal prices have been rising rather rapidly

TABLE 1/2.9-1

COAL* QUANTITIES REQUIRED

DISPERSED SITES

	2-885MW Units			2-1075MW Units			2-1320MW Units		
Heat Rate	8984			8993			9019		
Capacity Factor	.65	.75	.85	.65	.75	.85	.65	.75	.85
Tons/yr X 10^6	3.8	4.4	4.9	4.6	5.3	6.0	5.6	6.5	7.4
Unit Trains**/da.	1.0	1.2	1.4	1.3	1.5	1.6	1.5	1.8	2.0

24 UNIT ENERGY PARK

NUMBER OF UNITS OPERATING

	4			8			12			16			20			24		
Capacity Factor	.65	.75	.85	.65	.75	.85	.65	.75	.85	.65	.75	.85	.65	.75	.85	.65	.75	.85
Tons/yr X 10^6	7.8	8.8	9.8	15.2	17.6	19.6	24.4	28.2	31.6	32.6	38.8	43.6	43.8	51.8	58.4	55.0	64.8	73.2
Unit Trains**/day	2.0	2.4	2.8	4.0	4.8	5.6	6.6	7.8	9.8	9.2	10.8	12.0	12.2	14.4	16.0	15.2	18.0	20.0

* Coal is assumed to be 12,000 BTU/lb (HHV)
** Unit Train = 100 hopper cars of 100 ton capacity

and the price assumed in this study is not necessarily the current price of coal. Since differences in power production costs between energy parks and dual unit dispersed sites will not be a function of the mine mouth price of coal because it will be the same in both cases, the absolute value assumed is not critical. Delivered costs at the power plant will be a function of the hauling distance and the means of transportation. This might adversely effect the coal price per ton delivered if the hauling distance to the park is longer. A sensitivity run will be reported in Task 9 to investigate the effect of longer hauling and hence higher fuel price on the energy park.

The coal is assumed to cost $12.75 per ton at the mine mouth which is the geographical average of the minimum acceptable selling prices for coal from new underground mines in the "Business as Usual" scenario for 1977 as reported in Project Independence Blueprints' Transportation Cross-Cut Study.[40] This cost is in mid 1974 dollars. The computer program written to perform the cost-benefit sensitivity analysis of Task 9 will use the $12.75 value as the mine mouth cost, will escalate the cost to the year it is burned and will also escalate the transportation cost from the mine to the power plant by whatever mode is used.

Table 1/2.9-2 shows that if the coal is hauled by unit train a distance of 350 miles, a ton would cost $19.44 which is equivalent to 81¢/10^6 BTU. For the latest Federal Power Commission report on coal costs, see Reference 46. This table also indicates the fuel escalation rate to be used for sensitivity runs using different econometric models. In this study, no allowance is made for increases in mine mouth coal prices, greater than the escalated price, due to depletion of supplies of coal or harder to mine locations of future coals. The composite escalation rates shown for fuel are thought to be reasonable in light of the fact that 54% of rail expenditures are wages and benefits and the rest is materials and capital charges, and that hauling is roughly 40% of the delivered price per ton. It should be noted that escalation could cause a doubling in shipping costs before 1990.[40] An interesting fact noted is that the ICC approved a 7% rate increase which included coal hauling in March 1975, too late to change any numbers in this study.

Three modes of coal transportation will be considered in the next sub-section and consideration of the hauling costs by these modes will be included.

TABLE 1/2.9-2

FOSSIL FUEL COSTS USED FOR

COST BENEFIT SENSITIVITY ANALYSIS

COAL - (Eastern, 12000 BTU/lb)
Cost at Mine Mouth (1975 dollars) - $12.75/Ton

Representative Transportation Costs by Unit Train

DISTANCE	$/TON
350 miles	6.69
700 miles	9.21

Total Cost For Coal:

DISTANCE	$/TON	¢/10^6BTU
350 miles	19.44	81.
700 miles	21.96	91.5

For Computer Runs with Inflation Coal Costs will Be Inflated As Follows:

ESCALATION

Labor	Material	Fuel
6%/yr.	5%/yr.	5.5%/yr.
10%.yr.	8%/yr.	9%/yr.

Increasing coal costs due to depletion of supply are not accounted for in this representative data.

1/2.9.3 Transportation Modes

Basically three modes of transportation for coal to energy parks are considered. These are railroads (in unit trains), waterways (in barges) and slurry pipelines. These will be considered one at a time followed by a more detailed discussion of the problems of each mode. The unit train approach will receive the majority of the consideration because it is probably the mode that will handle the majority of the coal transported to an energy park if one is built in the near future. The costs associated with each mode will be presented.

1/2.9.3.1 TRANSPORTATION BY WATER. The least expensive way to ship coal is by barge if the destination is right. The conceptual layouts contained in Section 1/2.4 show the energy parks with access by barge canal from one of the country's navigable waterways which make up the inland waterway system of over 25,000 miles in length. Coal is presently the largest commodity moved by barge accounting for 22% of the total tonnage.

While inland waterway transportation is very efficient, the points of interface at ports between modes of transportation are somewhat behind the level of available technology. It is not unusual for handling costs at terminals to equal or exceed direct transportation costs of a typical shipment. If a park is located so as to permit access by barge the park must have an integrated high capacity barge unloading system and barge moving system. The cost savings of barge handling will be subject to reduction if intermodal transfer is necessary along the route. A large single shipment by barge contains 20,000 tons of coal so that a completed park would receive 8 or 9 of these barges per day, 365 days a year. New self-unloading Great Lakes ships can carry 30,000 tons of coal, future designs will be built to carry 62,000 tons. Current unloading equipment can unload in the range of 4000 to 5000 tons per hour making multiple barge unloading facilities mandatory at a park which has to receive 7500 tons per hour around the clock.

More efficient transloaders to move the coal from trains to barge and vise versa must be designed if intermodal transfers enroute to a park don't get ruled out on the basis of economics.

One projection shows that the 184 million tons of coal that were moved at least part-way to their destination by barge in 1969 will increase to 319 million tons by the year 2000.

Development of modern terminals and ships will boost the flow of coal from one area of the country to another, giving utilities more option in selecting their sources of fuel especially for dual unit dispersed sites. When it comes to a large energy park the options will be narrowed by the enormous quantities required; and in locations where access by barge or ship is possible optimum use of this low cost mode of transportation will be made.[41]

1/2.9.3.2 TRANSPORTATION BY SLURRY PIPELINE. Coal slurry pipelines offer the capability of moving large amounts of coal reliably and less expensively than rail transportation but more expensively than by waterway, where large amounts refers to quantities required for dual unit dispersed sites. The quantities required for a 26,240MW energy park may indeed be a different story. So far slurries have been considered mostly for the south and southwest.

Some of the advantages of coal slurry pipelines are that they are environmentally acceptable, they are safe, silent, and invisible.

To date the longest slurry pipeline is the line from Black Mesa, Arizona to the Mohave Power Plant in Nevada. Newly proposed slurries include a 1000 mile line from Wyoming to Arkansas, another from Colorado to Houston, etc.[42]

While the technology for coal slurry pipelines is established, the finely ground coal is only 50 percent of the slurry, the remainder being water, the slurry medium. Because the particles are transported in a turbulently flowing medium, they tend to remain suspended thus causing little friction wear to the pipe surface. Slurry pipelines operate with enviable availability records of 98% or better due to their inherent simplicity. They can be operated with a relatively small work force.[43]

These are attractive attributes for the utility industry and all of the coal pipelines proposed or built are to serve utilities. Because utilities are turning to construction of this mode of transportation, the railroads express some opposition to their construction.

One of the slurry pipelines being planned would be a 1030 mile line from Wyoming to Arkansas. It would be a 38" diameter line that could handle a throughput capacity of 25 million tons per year. So it is obvious that it would

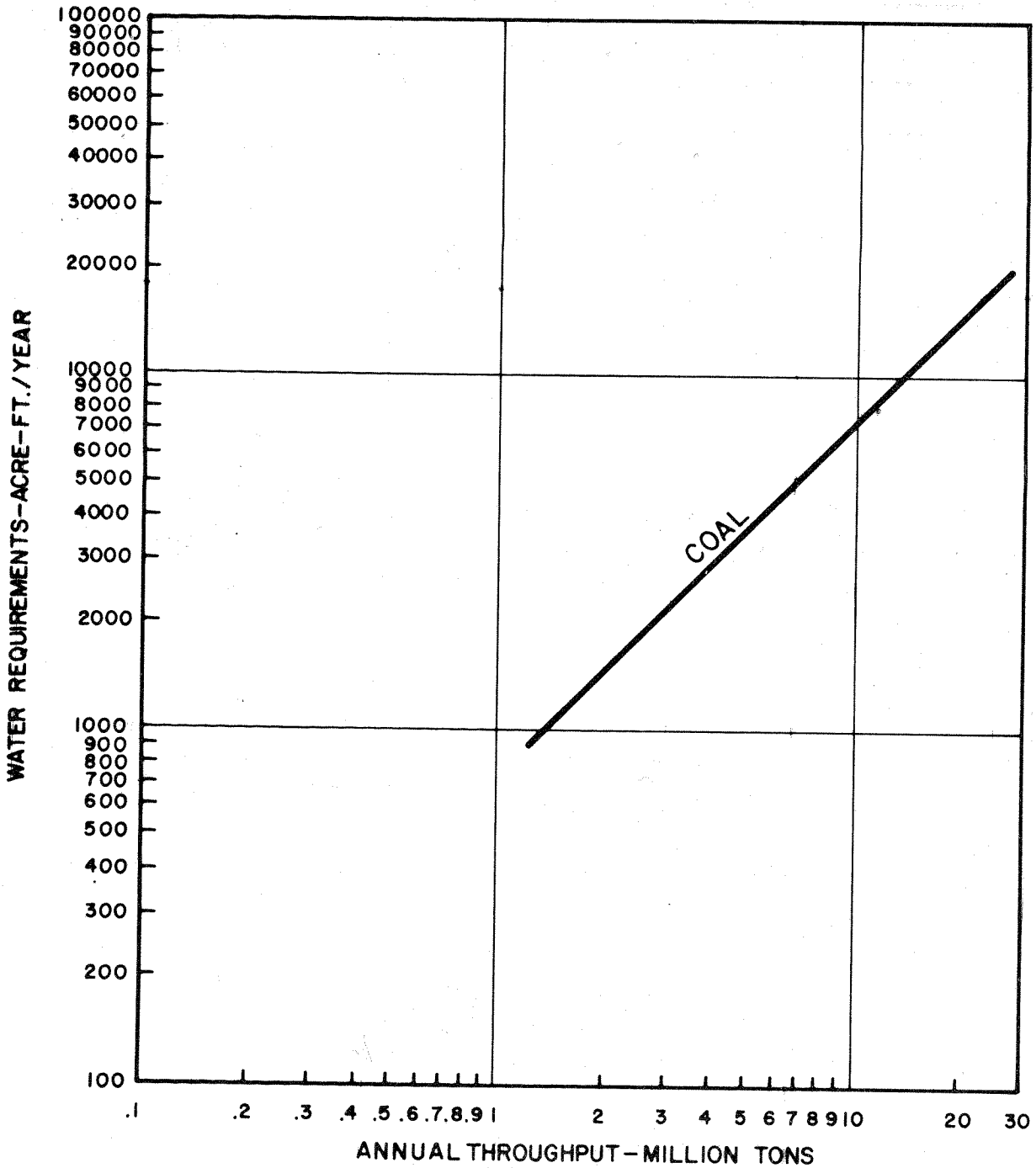

FIG. 1/2.9-3
SLURRY PIPELINE
WATER REQUIREMENTS

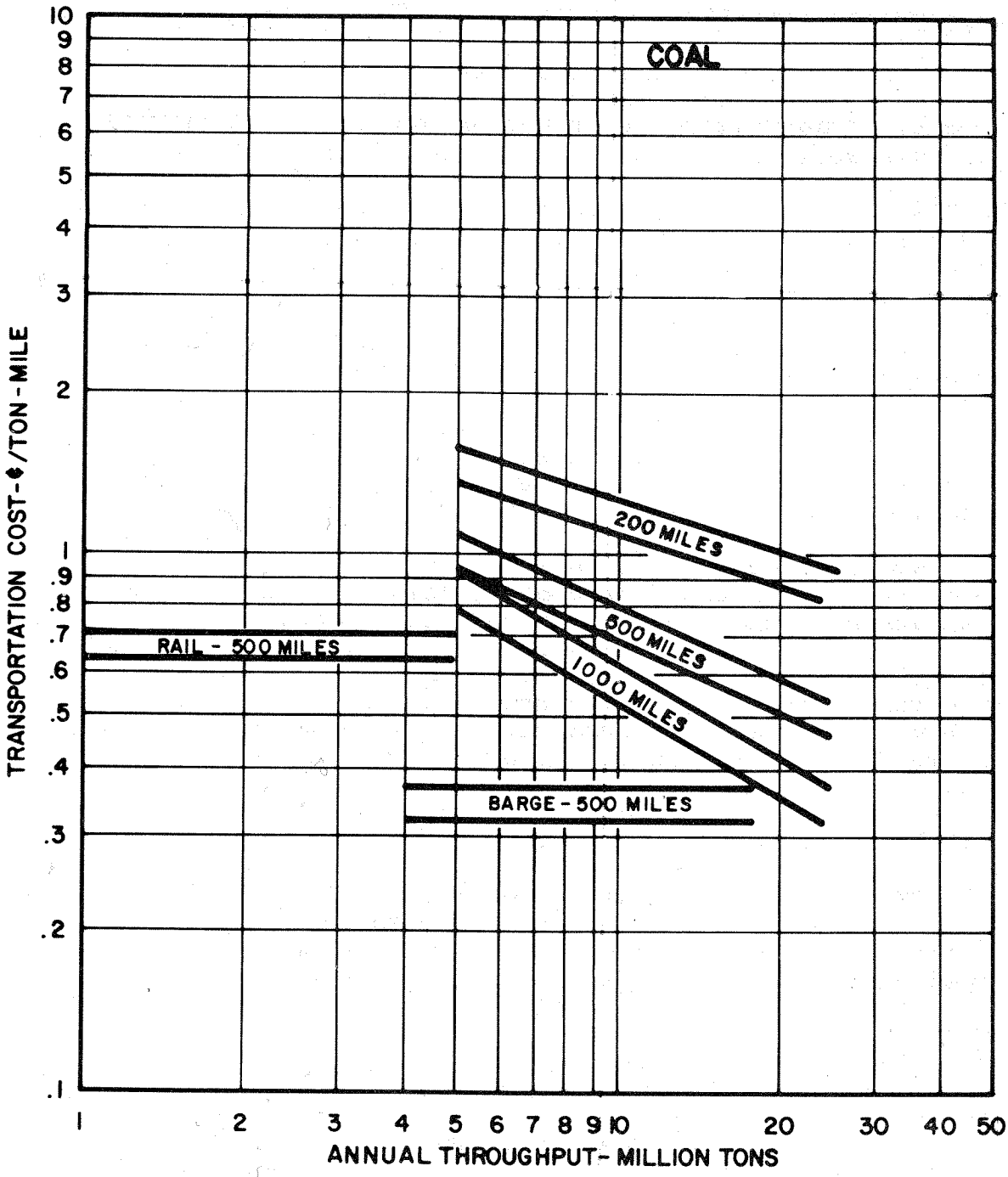

FIG. 1/2.9—4
SLURRY PIPELINE
TRANSPORTATION COST

take more than two of these extremely large pipelines to supply enough coal for one 26,240MW energy park.[42]

The slurry pipelines are interstate lines and hence face multijurisdictional problems at the state and federal levels. Acquiring right of way is one of the major problems as few states have granted operators of coal slurry pipelines the right of eminent domain. The risk of constructing such a line without this authority is very great. Legislation, which is deemed essential to development of these lines, is pending. This study will not involve iself with the pros and cons of such legislation.

One question that both environmentalists and the pipeline operators have to raise is the question of water availability. The quantities of water used may restrict the use of slurry pipelines to areas of water abundance. Figure 1/2.9-3 indicates water requirements for slurry pipelines.[43] In the absence of required legislation, pipeline construction is not progressing presently.

Slurry systems require only carbon steel pipe with welded joints buried underground, large volume positive displacement pumps, and large capacity agitated slurry storage tanks. Pumping stations are placed depending on terrain and line size at 60 to 80 mile intervals. At the receiving end of the coal slurry pipeline is a dewatering system. Some savings occurs in that the crushed coal needs little further pulverizing before being fired. The energy requirements for operating these energy efficient coal slurry pipelines is somewhat less than that required for either rail or barge hauling.

Figure 1/2.9-4 shows a comparison of transportation costs for rail, barge, and slurry pipeline showing that large diameter systems approach those for barge transportation.[43] Pipelines may also be the most direct, shortest distance route also reducing their costs in a comparison study. A major economic advantage is held by the pipeline in that while they require intensive investment to build at the beginning, the costs then become fixed and insensitive to escalation. This tends to keep the hauling charges down in comparison to other modes that required continuing investments subject to escalation.

If rail tariff is in the range of 8 to 10 mills per ton - mile, the slurry pipeline becomes competitive with rail at roughly 10 million tons per year capacity and 500 miles distance and if waterway tariff is 4 to 6 mills per ton - mile, the pipeline needs to carry 20 million tons a year

for 1000 miles to complete.[40] One should note that the tariff will depend on location of mine and plant, terrain and circuitry of the route, cost of water, state laws, etc. The financial flexibility of a pipeline to operate at below capacity may be more restrictive than for other modes of transportation. Also economy of scale shows larger throughputs to be much less costly, indicating pipelines to be more economical for western, larger capacity, strip mines than for eastern underground mines. Figure 1/2.9-5 also gives slurry costs for various throughputs and distances.[43]

One way to surmount the strong competitive opposition of railroads to the slurry pipeline would be to have them involved in building these pipelines. They possess vast quantities of right of way and own large coal deposits. It might be of greater interest to the railroads to consider a slurry where the liquid medium was liquified coal instead of water. The coal, especially western lower BTU coal, could be dewatered and ground at the mine, part of it could be liquified, most of the pyritic sulfur and ash would be removed, and the resulting delivered product would be a high BTU beneficiated coal and a liquid that could be separated by fractionization or refining into various useful components for industrial uses, burned in peakers, etc. No water and hence no waste is the result of such a system. The energy and hydrogen gas required for the liquification process would need to be considered in any economic evaluation of such a slurry process. These would add to the cost of the cleaned coal.

With the advent of slurry pipelines a major reason for locating a generating plant at a mine-mouth, which is to avoid the high cost of transportation of solid coal and the substitution of lower cost transmission of electricity by wire, may be alleviated. Plant siting could then be done for environmental reasons and some of the unwanted problems at the mine-mouth could be removed.[42]

1/2.9.3.3 TRANSPORTATION BY RAIL. Rail transportation handles by far the largest portion of coal movement. Rail and rail-water transportation systems have the advantage of providing flexibility and expandability with respect to routing and capacity of coal movements between individual mines and generating facilities. In this sub-section shipping costs per ton-mile and examples of resource requirements for new routes and equipment that might be necessary for a 26,240MW energy park burning 65 million tons of coal per year are discussed.

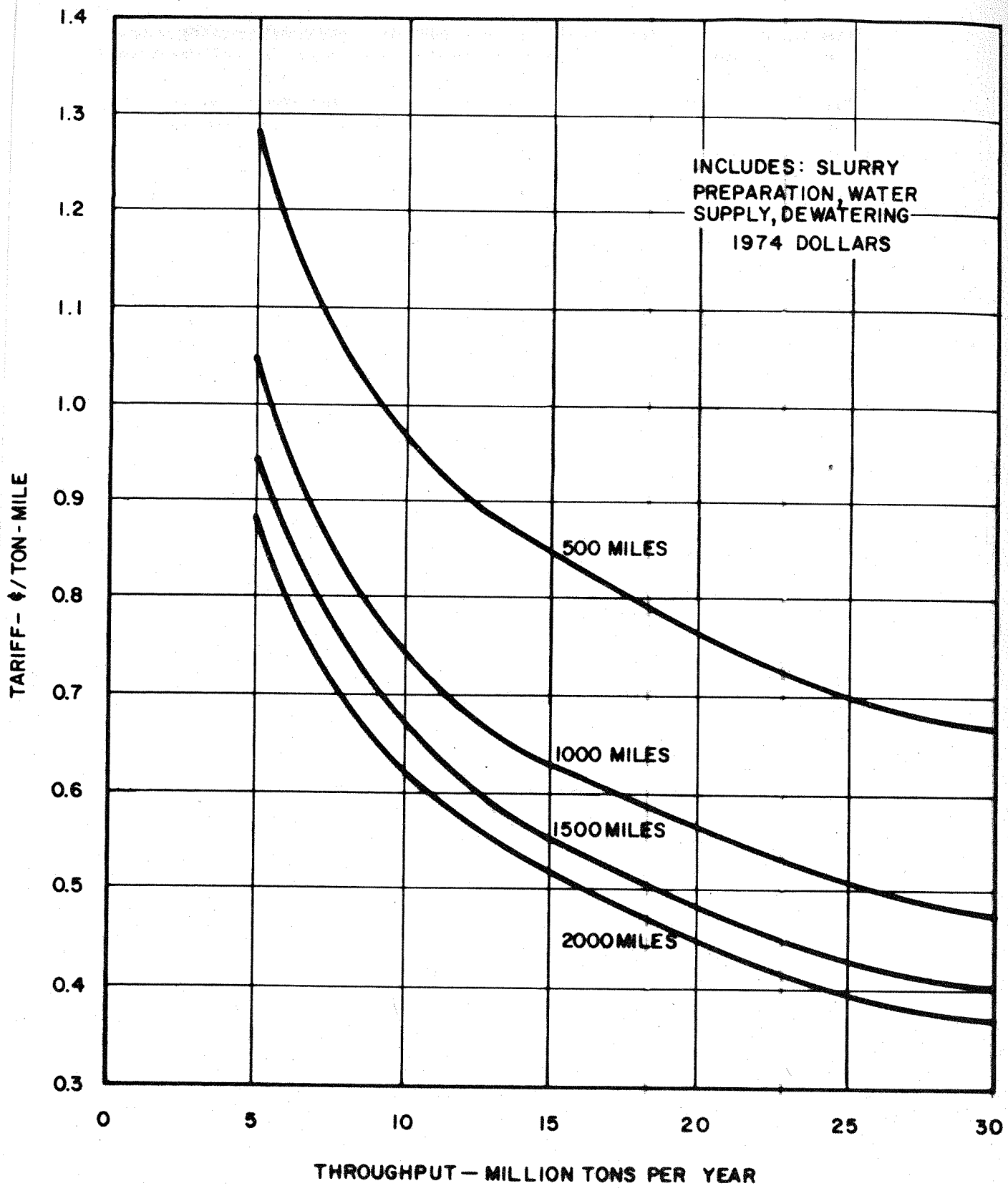

FIG. 1/2.9-5
COAL SLURRY PIPELINE TRANSPORTATION COSTS

Discussion of the loading, unloading, signaling and dispatching problems is also included.

For discussions on rail hauling it is assumed that all coal movements will be in 100 car unit trains each car will hold 100 to 105 tons of coal.

From Project Independences Cross-Cut Study on transportation, rates for unit train shipments were computed in $/Ton (1974 dollars) from various supply centers to various supply centers. Table 1/2.9-6 from that study is included in this report. Also included is the list of coal supply regions and demand regions as Table 1/2.9-7.

Figure 1/2.9-8 is a composite figure which shows a comparison of the cost of coal transportation by each of the three modes considered in this study as a function of miles and quantities moved. Note for rail hauling the quantity was considered to be a 10,000 ton or greater unit train. Values from the unit train curve were increased 10% and used as input data for the cost-benefit sensitivity analysis in Task 9. This increase was made to bring the costs more in line with 1975 costs.

More than sixty million tons of coal per year for a single energy park when it is in full power production requires approximately 18 unit (10,000 ton) trains of coal to be delivered each day of the year, or more than 18 trains on working days. Considering that the average midwest or eastern underground mine works only 225 days per year due to weather conditions and other work stoppage problems, the mines would have to load the equivalent of 29 unit trains per day. A large underground mine such as the Harris Deep Mine can only load 5,800 tons/day or 1.3 million tons per year. Ohio has some strip mines that can produce between 2 and 3 million tons per year at a rate of 8,800 tons/day. Only in western strip mines with larger daily capacities can enough coal be produced to fill even one unit train a day.[44]

Also a problem of finding enough flat land in the vicinity of underground mines to load a unit train exists since most mines of this type are in mountaineous terrain. Hilly terrain also makes up to 10 units of locomotive power per train necessary, this is expensive!
Clearly then to ship 29 unit trains per working day to an energy park would require the output of over 50 mines except in the west. The BTU value of the western coal

TABLE 1/2 9-6

AVERAGE COST (TO SHIPPER) IN $/TON FOR COAL MOVEMENT IN GREATER THAN 6000 NET TON TRAINLOADS: 1974 PROJECTED RATES[1]

Supply Centers	DEMAND CENTERS 1	2	3	4	5	6	7	8	9
1	10.50	9.12	5.57	8.08	7.13	7.07	11.79	12.85	22.4
2	12.58	10.86	8.34	8.99	4.71	0	8.85	13.76	22.6
3	12.48	11.34	5.59	5.54	8.05	7.05	10.37	10.32	19.8
4	17.45	15.76	10.72	7.34	9.65	8.40	5.44	9.72	17.3
5	20.69	19.86	13.05	11.34	17.87	16.87	16.63	8.38	14.2
6	21.14	10.09	13.50	10.11	15.12	13.87	10.39	7.04	12.5
7	28.08	27.25	20.44	18.24	23.85	22.60	19.30	13.77	

1. 1969 regression computed rates were projected to 1974 using the cumulative exparte rate increases of about 60% granted by the ICC to railroads from 1969 to 1974 (supplied by the FRA).

TABLE 1/2.9-7

COAL SUPPLY AND DEMAND REGIONS

Coal Supply Region	Represented By
1. Northern Appalachian	Wheeling, W. Va.
2. Southern Appalachian	Nashville, Tenn.
3. Interior	St. Louis, Mo.
4. Gulf	Dallas, Tex.
5. Northern Great Plains	Billings, Mon.
6. Rocky Mountain	Alberquerque, N.M.
7. Pacific	San Francisco, Calif.

Demand Region	Represented by
1. New England	Boston, Mass.
2. Middle Atlantic	New York, NY
3. East North Central	Chicago, Ill.
4. West North Central	Kansas City, Mo.
5. South Atlantic	Atlanta, Ga.
6. East South Central	Birmingham, Ala.
7. West South Central	Houston, Tex.
8. Mountain	Denver, Col.
9. Pacific	San Francisco, Calif.

FIG. 1/2.9-8
COAL TRANSPORTATION COST COMPARISON

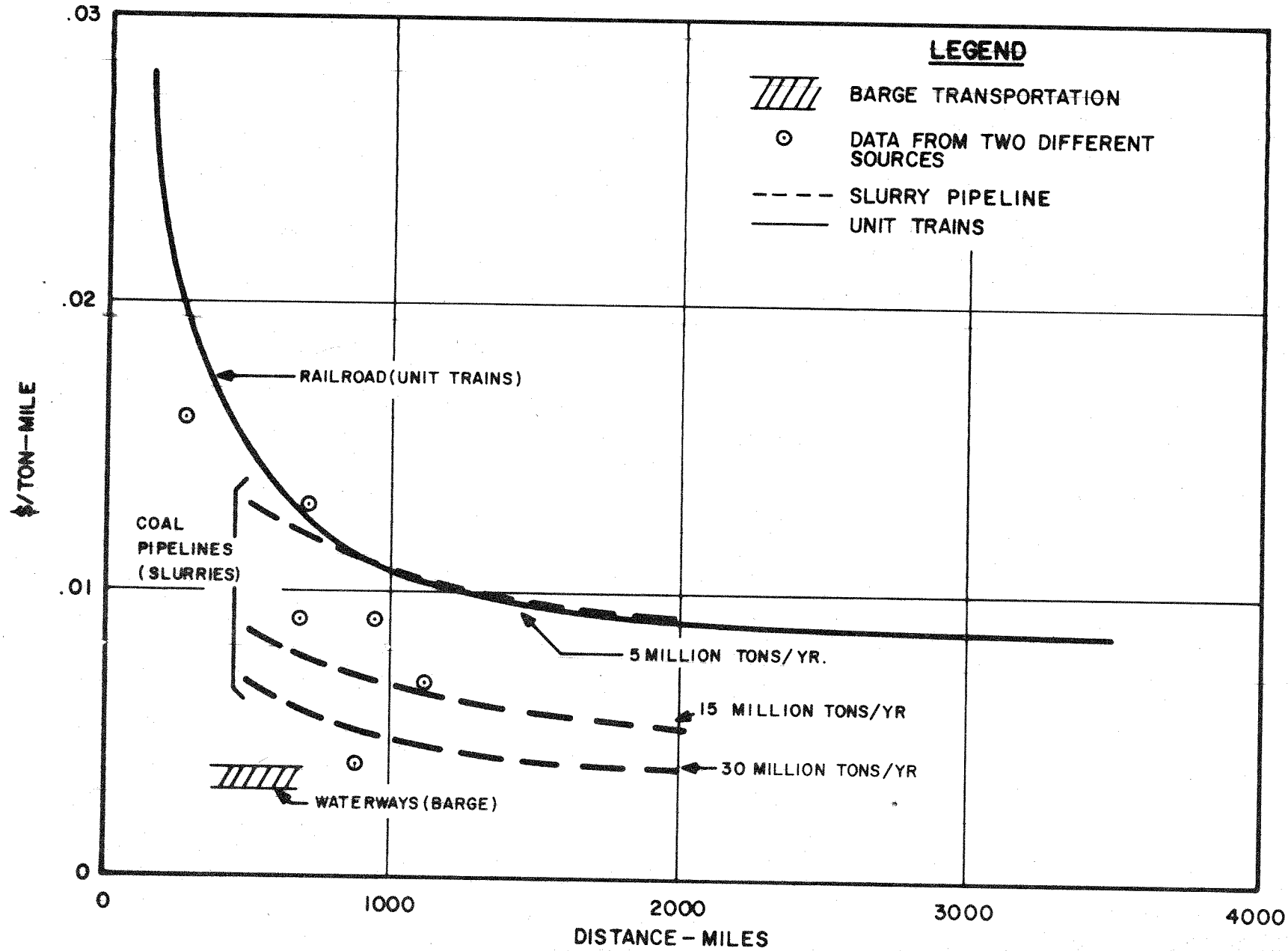
LEGEND
BARGE TRANSPORTATION
DATA FROM TWO DIFFERENT SOURCES
SLURRY PIPELINE
UNIT TRAINS
RAILROAD (UNIT TRAINS)
COAL PIPELINES (SLURRIES)
5 MILLION TONS/YR.
15 MILLION TONS/YR
30 MILLION TONS/YR
WATERWAYS (BARGE)
$/TON-MILE
.03
.02
.01
0
0
1000
2000
3000
4000
DISTANCE - MILES

averages 8,500 BTU/lb so that instead of a 65 million tons of 12,000 BTU/lb coal per year requirement the quantity would be 92 million tons or 41 unit trains per working day. If the western strip mine produced 12 million tons/year the output from almost 8 mines per year would be required for one 26,240MW energy park. One advantage that does occur due to the need to receive coal from so many different mines would be the lessening of common mode failures such as local miners walkouts, etc.[44,45]

The next consideration is that of turn around time for the unit train. Table 1/2.9-9 gives some current turn around times for unit trains.[40] These times are comprised of loading, unloading, switching and traffic congestion time. One surprising fact is that the average speeds of unit trains on existing regional coal roads are only:

Coal Roads Averages	MPH
Eastern	18
Southern	21
Northwestern	22
Central Western	26
Southwestern	22

To make some estimate of the equipment and investment needed for one energy park, a four day turn around on an average haulling distance of 432 miles each way is assumed. This assumes two days of travel at 18 mph and two days for loading, unloading and contingency.

$$4 \text{ days} \times 100 \frac{\text{cars}}{\text{train}} \times \frac{18 \text{ trains}}{\text{day}} = 7{,}200 \text{ hopper cars}$$

Lost time for running repairs and major repairs as cars age requires the railroad to have 7,500 hopper cars in dedicated service.

4 days X 18 trains/day X 4 locomotives/train = 288 locomotives

18 trains/day X 4 days X 1 caboose/train = 72 cabooses

The investment in this equipment would be approximately:

7500 cars @ $28,000	=	$210 X 10^6
72 cabooses @ $35,000	=	2.5 X 10^6
288 locomotives @ $350,000	=	100.8 X 10^6
+10% for breakdowns	=	10.0 X 10^6
TOTAL ROLLING STOCK	=	$323.3 X 10^6

TABLE 1/2.9-9

TURNAROUND TIMES IN DAYS FOR ROUND - TRIP UNIT TRAIN COAL SHIPMENTS

Supply Centers	DEMAND CENTERS								
	1	2	3	4	5	6	7	8	9
1	6.34	5.50	3.30	4.46	3.94	3.91	6.29	6.50	10.59
2	7.27	6.21	4.79	4.55	2.66	0	4.29	6.72	11.73
3	7.56	6.87	3.31	2.89	4.45	3.79	5.31	4.93	9.02
4	10.12	9.28	5.43	3.88	5.20	4.54	3.00	5.04	9.19
5	11.55	11.04	6.84	5.64	9.41	8.75	8.34	4.3	7.16
6	11.92	11.23	6.45	5.00	7.96	7.30	5.50	3.69	6.46
7	14.51	13.45	9.25	8.31	12.39	11.73	9.88	6.40	0

Because the tendency has been to remove rail and go to single track systems wherever possible, two conclusions can be drawn. One is that a track inventory is mandatory in light of the probably expansion of coal hauling by rail for energy production. No old track that could possibly be required for such service in the national interest should be removed without careful study and weighing of all the factors. The other is that for an energy park, a dedicated track system would be required since most existing rail systems could not handle anywhere near 36 trains past a single point on a given day (18 going and 18 coming). The signaling and switching problems would be very great.

Considering new track to cost:

Rail	$125,000/mile (flat land)
Signals, Switches, Grading. etc.	200,000/mile
TOTAL	$325,000/mile

These costs do not include tunnels, bridges or land. It is assumed that for the most part the new track could be on existing railroad rights of way. If 432 miles of rail were necessary and the land was already owned, the total cost would be:

432 mi. X $325,000/mi. = $140.4 X 10

Another $70 X 10^6 might be required for a double track system, bringing the total investment for rolling stock and rail to $533.7 X 10^6 (over half a billion dollars). Fortunately this investment is small compared to the investment in generating equipment reported in Task 9, and can be phased in as the generating units are coming on line. The question as to who owns the rolling stock, the railroad or the utility is left unanswered. Various agreements can surely be reached. Under present FTC laws that prevent railroads from entering into long term hauling agreements the railroads are capital poor and can't enter into such mammoth energy projects easily. They must remain just a transportation service with the customer paying short term costs unless legislation changes to allow railroads to be optimized comfortably into a long term "Project Level" program with some promise of return to their investors.

The above estimate of capital investment required for one dedicated coal hauling system for one energy park has associated with it a requirement for operation and maintenance expenses. It is interesting to look at the magnitude of these expenses:

Manpower (Train Crews)

12 crews/day X 18 trains = 216 crews

365 days X 216 crews X \$220/crew = \$17.3 X 10^6/year

Locomotives (Operating Cost, Fuel)

18 trains X 365 days/year X 24 hrs/day X 4 locomotives/train X \$35.33/locomotive-hr = \$22.3 X 10^6/year

Track Maintenance	\$8.0 X 10^6/year
Car Maintenance	4.5 X 10^6/year
Total Oper. & Main./yr.	\$52.1X 10^6 /year

This expense plus the fixed charges on the initial investment plus some return go into the rate base for calculating the tariff's charged.

Perhaps the 4 day turn around assumption can be reduced by installing long stretches of high quality road bed and heavy rail to permit the heavy trains to reach speeds of 40 to 50 mph, by installing new sidings, signals, modifying and improving yards, and by installing the fastest, most sophisticated, loading and unloading equipment.

One of the last considerations for rail hauling of coal to a 26,240MW energy park is that of loading and unloading. Assuming that a rail routing for all coal has been established, there is still the problem of collecting the coal, loading the cars, and making up the unit trains. As was noted previously the unit trains will be made up from the output from more than one mine. Conveyor systems capable of handling up to 18° grades are available. The output from several mines in one coal field region could be conveyed to a centralized loading substation which would contain 15,000 ton silo's, conveyors, feeders, etc. This equipment can load cars continuously by flood loading them as they pass under the loader. One unit train can be loaded in one to one and one half hours. There would of necessity be several of these substations for loading. These substations might cost 5 to 6 million dollars. In the park itself, dumpers and positioners would be required to unload the trains rapidly since on a given day 18 to 30 trains might arrive. Rollover dumpers that can dump two cars at once seem to be the most practical since bottom dumping cars tend to get clogged due to freezing and or caking. A new design where the sides of the car open out to allow the coal to slide off the sloped bottom might be faster than roll over dumping. One tandem dumping system can unload a 100 car train in 4 hours and might cost \$2 million including conveyors, crushers, stackers, etc. At

least 4 of these unloading systems would be required in the energy park. Unloading is less of a problem than collecting the coal and making up the trains.

This concludes the consideration of transportation of the required coal to an energy park by rail.

1/2.9.4 Cost Considerations - Low BTU Coals

The cost estimates for this study are based on coal fired units that burn high sulfur (3-4%) 12,000 BTU/lb coal. If either a dual unit dispersed site or an energy park were built to burn either lignite (6700 BTU/lb) or western coals with heat contents around 8500 BTU/lb, there would be a cost differential due to the larger volumes of coal the boiler plant and coal handling systems must accommodate. These western coals are much lower in sulfur content (approximately 1%) and therefore, the flue gas desulfurization (scrubber) will be less costly if it is required at all. It is estimated, based on costs shown in Reference 31 but updated to 1975 dollars by the same escalation factors discussed in Section 1/2.5, that the boiler plant, coal handling equipment, etc. will increase in cost by approximately $45/Kw for a 1000MW unit while the SO_2 removal system will decrease in cost by approximately $12/Kw. The western coal, however, will require more particulate control and the precipitators are estimated to be in the neighborhood of $15/Kw more costly making the net change for burning low BTU coal cost about $48/Kw more. For different unit megawatt ratings economies of scale will cause this number to vary up to 12% either way.

The other consideration to account for when burning lower BTU coals is that they are less costly at the mine. The mine-mouth cost for coal from new surface mines in the West may be about $6/ton as compared to the $12.75/ton assumed for midwestern and eastern high BTU coal from new underground mines. This difference is offset by the need for larger quantities of coal and longer hauling distances so that the cost of fuel to the electric utility won't vary widely. In the next section conclusions are reached and research topics in the transportation area are enumerated.

1/2.9.5 Conclusions and Research Topics

If fossil fired 26,240MW energy parks are not deemed impractical for other reasons such an environmental considerations, they may be so deemed because of fuel transportation problems. Such vast quantities of coal being transported to one location from so many scattered mine locations creates a logistics problem of the highest magnitude.

If such a park were built, Figure 1/2.9-10 indicates that each of the three transportation modes might be required in some combination just to transport the large quantities of coal and to minimize congestion at the park itself. The satellite sub-stations could collect the coal, prepare it, load it, liquify or gassify some of it for use in peaking gas turbines and contain transmission substances. In all probability the first coal fired energy parks will be more on the order of 10,000MW capacity and the fuel transportation problems will be much less difficult.

This Section, 1/2.9, has identified several areas of research that deserve study in order to improve the existing coal transportation methods. These include:

Coal benefication
Coal liquefaction
Coal gasification
Coal loading, transloading, unloading equipment designs
Railroad legislation
Slurry pipeline legislation
Financial practices of the transport industry
Present equipment surveys

In conclusion it should be recognized that the discussion and example numbers have been those required for a single energy park. Whether coal fired energy parks are built or not, if the United States is to reach 800 million tons per year consumed in the electric utility industry by 1985, large investments in transportation equipment for all modes must be made and capital must be found from any and all investors to begin building this equipment soon.

1/2.10 RELIABILITY, AVAILABILITY AND PLANT CAPACITY FACTOR ASSUMPTIONS

Reliability was an essential guiding factor considered during the selection of unit sizes for the energy parks and dispersed sites considered in this study. Once the reliable, proven units were chosen for the park; a plan of operation was chosen for the units. This plan was to consider the units as being base loaded. These units would have average values for forced outage rate, which is the ratio of unscheduled and unplanned maintenance down time to total service and forced outage hours. Also the units would have a planned outage rate, the ratio of planned maintenance down time to total service and planned outage hours, consistent with the industry average. These average values for forced and planned outage rates would permit the units to operate

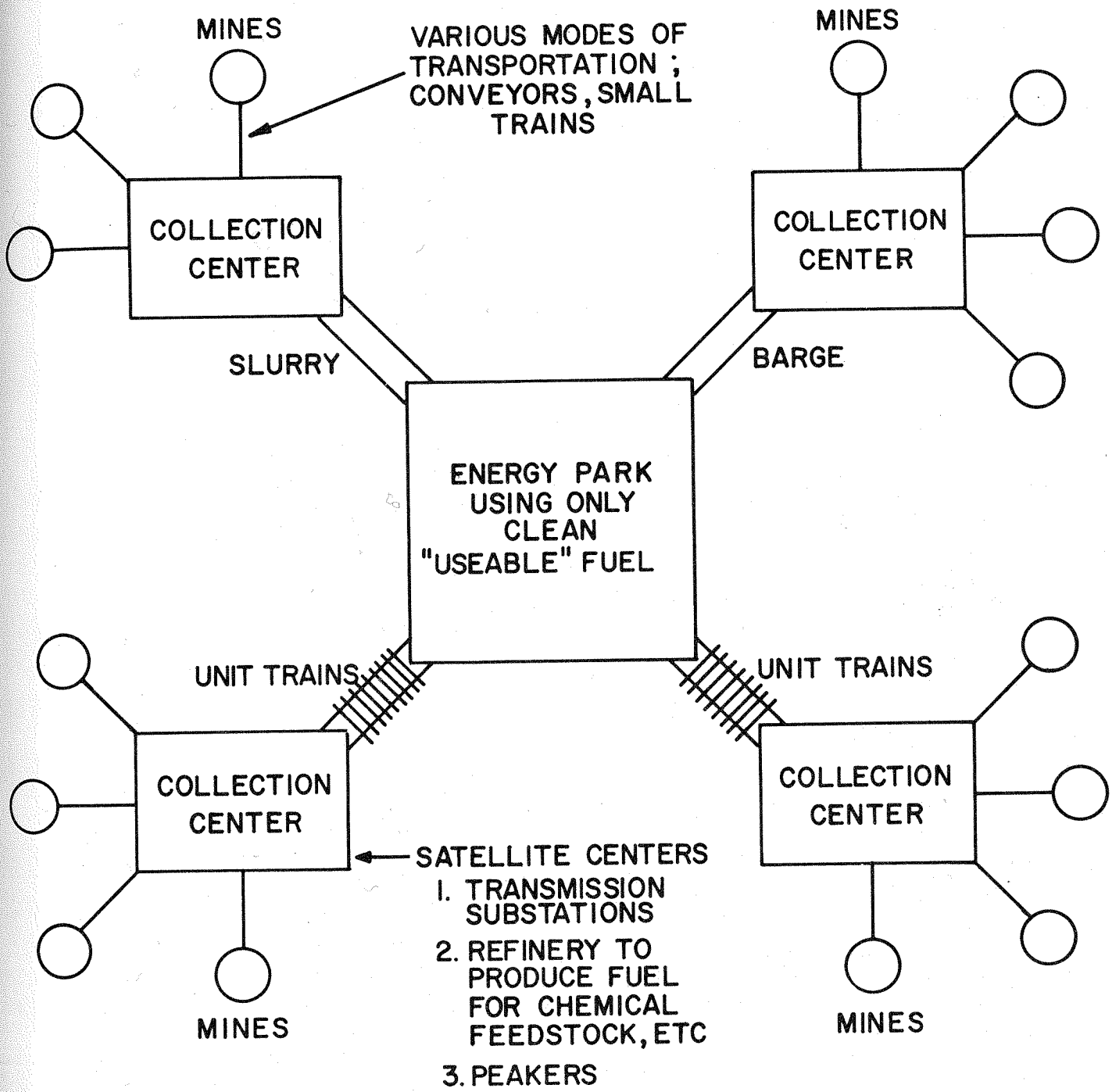

FIG. 1/2.9-10 COAL HAULING LOGISTICS FOR ENERGY PARKS

with a capacity factor consistent with operating experience on large units.

The costs associated with equipment unavailability level, and the sophisticated probabilistic methods for predicting the loss of load probability (LOLP) used by utilities in performing risk analyses that might be associated with a park; are not considered in this report.

In order to perform the sensitivity analyses contained in Task 9, several capacity factors are to be considered. The three values chosen for capacity factor are 0.65, 0.75 and 0.85. These values are thought to cover a range from the current industry experience to the future goals of equipment manufacturers. The fossil units being considered in this study vary in size from 885MW to 1320MW. The reliability of these units is assumed to be acceptable, i.e. demonstrated, before being committed to the energy park. No accounting for the variation of reliability with unit size was made; however, for proven units, this is not believed to be a significant variable in the overall cost comparison between fossil energy parks and dispersed sites.

No distinction in these data were made between unit performance in an energy park or in a dispersed site. There is perhaps some basis for believing that reserve margin requirements may be reduced in a park; due to better operation and maintenance procedures and operator training, better repair equipment and facilities, more complete spare parts inventory, better feedback of outage problem information to enable other units in the park to be inspected rapidly, etc. All of these potential assets of the park would hopefully lead to a lower forced outage rate, thereby reducing the system reserve margin needed. No specific amount of reduction is enumerated in this chapter. The reduction may be in the range of 1 to 3% of the total MW rating of the park. Some studies have indicated that a 1% change in the average forced outage rate will result in a 1.4% change in the installed capacity requirement to maintain the same level of reliability.

More extensive discussion of reliability considerations is contained in Task 3 on Power Transmission For Energy Parks vs. Dispersed Sites.

For the comparison between parks and dispersed sites, the assumption is that the same rated capacity will be installed to come on line at the same time in the park as in the dispersed site; with no capital cost considerations included for required reserve margins. The only additional capacity from peaking units (gas turbines) considered in the study is

the capacity needed to compensate for the predicted larger transmission losses in an energy park as compared to a series of dispersed sites. This needed capacity could also be made up in other ways discussed in Task 9.

1/2.11 FURTHER RESEARCH NEEDS FOR ENERGY PARKS

This section outlines some of the future technology requirements that were brought to light during the course of Task 1/2 of this study.

- oo Environmental
  - o Additional field testing and mathematical modeling is required to evaluate the impact of interaction of cooling tower plumes and exhaust plumes. Problems to be addressed include added plume buoyancy, creating of acid mists and sulfates.
  - o Wind tunnel testing for alternative park configurations is required to supplement mathematical modeling and to evaluate the impact of terrain.
  - o Additional field testing and mathematical modeling is required to evaluate the phenomenon of high buoyancy plumes punching through inversion layers.
  - o Regenerative SO_2 scrubbing systems must be developed that are reliable and economical in order to reduce the land requirement for sludge disposal.
- oo Fossil Fuel (Coal)
  - o Coal beneficiation, liquefaction, and gasification processes should be developed.
  - o Future coal transportation systems should be designed to make loading, transloading, and unloading faster and more efficient.
- oo Modular Construction
  - o Power plant designs should be made with the modular criteria established beforehand.
  - o The on-site manufacturing facility should be carefully studied and designed.
  - o Detailed construction sequence planning studies using the most modern computerized planning techniques should be made.

- o Once a specific site is chosen for an energy park, the site must be planned carefully to be assured of optimum use of the modular construction methods and the on-site manufacturing facility.

- oo Operation and maintenance of an energy park
  - o Studies should be made to establish a system for scheduling maintenance so as to minimize planned outage times and make optimum use of the park labor force.

1/2.12 REFERENCES

1. "1000-MWE Central Station Power Plants Investment Cost Study," United Engineers and Constructors, Volume III, Coal-Fired Fossil Plant, (AEC-WASH 1230), June, 1972.

2. "Power Plant Capital Costs, Current Trends And Sensitivity to Economic Parameters," AEC, WASH 1345, October, 1974.

3. "Nuclear Plant Local Time, Costs, Labor and Material Takeoffs," R. Budwani, Power Engineering, April, 1974.

4. 1972 General Electric Study on Nuclear Power Parks, Internal Report.

5. "An Investigation of Novel Construction Methods for Nuclear Power Centers," Volumes 1 & 2, NEDE 13995-1 GE Report, October, 1973.

6. "The Value of Replication to TVA," I.D. DeBoer and G.S. Bonk, Internal GE Report, June, 1974.

7. "Capital Cost Calculations for Future Power Plants," Power Engineering, January, 1973.

8. "American Electric Power 835 MW Boiler Series," J.E. Dolan and W.D. Stevens, American Power Conference, May 9, 1973.

9. "Plume Rise," G. A. Briggs, AEC Critical Review Series, TID-25075, 1969.

10. "Principal Plume Dispersion Models: TVA Power Plants," S. B. Carpenter, et al., Journal of the Air Pollution Control Association, Volume 21, No. 8, pp. 491-495, August, 1971.

11. "Full-Scale Study of Dispersion of Stack Gases, A Summary Report," F. E. Gartrel, et al., Tennessee Valley Authority and Public Health Service, Cattanooga, Tennessee, August, 1964.

12. "Full-Scale Study of Plume Rise at Large Electric Generating Stations," S. B. Carpenter, et al., PB 207 936, Tennessee Valley Authority, Muscle Shoals, Alabama, September, 1968.

13. "Full-Scale Study of Plume Rise at Large Electric Generating Stations - Bull Run Supplement," T. L. Montgomery, et al., Tennessee Valley Authority, Division of Environmental Research & Development, Muscle Shoals, Alabama, PB 206 821, October, 1971.

14. "Plume Rise Estimates for Electric Generating Stations," F. W. Thomas, et al., Journal of the Air Pollution Control Association, Volume 20, No. 3, March, 1970.

15. "Potential Dispersion of Plumes From Larger Power Plants," F. Pooler, Jr., Public Health Service, Cincinnati, Ohio, PB 168 790, 1965.

16. "Meteorological Program for Limiting Power Plant Stack Emissions," J. M. Leavitt, et al., Journal of the Air Pollution Control Association, Volume 21, No. 7, pp. 400-405, July, 1971.

17. "Results of Recent TVA Investigations of Plume Rise," T. L. Montgomery, et al., Journal of the Air Pollution Control Association, Volume, 22, No. 10, pp. 779-784, October, 1972.

18. "A Simplified Technique Used to Evaluate Atmospheric Dispersion of Emissions From Large Power Plants," T. L. Montgomery, et al., Journal of the Air Pollution Control Association, Volume 23, No. 5, pp. 388-394, May, 1973.

19. "Behind the Great Scrubber Fracas," P. H. Weaver, Fortune, pp. 106-114, February, 1975.

20. "Workbook of Atmospheric Dispersion Estimates," D. B. Turner, Environmental Protection Agency, Office of Air Programs, Research Triangle Park, North Carolina, 1970.

21. "User's Guide to the Interactive Versions of Three Point Source Dispersion Programs: PTMAX, PTDIS, and PTMTP," D. B. Turner & A. D. Busse, National Environmental Research Center, Office of Research & Monitoring, EPA, Research Triangle Park, N.C., June, 1973.

22. "User's Guide for the Climatological Dispersion Model," A. D. Busse & John R. Zimmerman, National Environmental Research Center, Office of Research & Development, U.S. Environmental Protection Agency, Research Triangle Park, North Carolina, December, 1973.

23. "Large Power Plant Effluent Study (LAPPES)," F. A. Schiermeier, National Air Pollution Control Association, Volumes I, II, III & IV, 1967-1971.

24. "Dispersion From Tall Stacks: An Evaluation," F. Pooler, Jr., L. E. Niemeyer, Second International Clean Air Congress, Washington, D. C., December, 1970.

25. "Sulfur Dioxide in the Vicinity of the Cardinal Plant of the American Electric Power System," T. T. Frankenberg, I.A. Singer & M. E. Smith, Second International Clean Air Congress, Washington, D.C., pp. 1042-1049., December, 1970.

26. "Meteorology, Power Generation and Sulfur Dioxide Concentrations During a Major Air Stagnation Episode," T. T. Frankenberg & K. J. Skipka, Combustion, pp. 6-11., July, 1974.

27. "Plume Rise from Multiple Sources," G. A. Briggs, Air Resources Atmospheric Turbulence & Diffusion Laboratory U.S. Dept. of Commerce, March, 1974.

28. "Some Recent Analysis of Plume Rise Observations," G. A. Briggs, U.S. Dept. of Commerce, National Oceanic And Atmospheric Administration, Oak Ridge, Tenn., December, 1970.

29. "Cost Comparisons of Flue Gas Desulfurization Systems," G. G. McGlamery & R. L. Torstrick, EPA Flue Gas Desulfurization Symposium, Atlanta, Georgia, November 4-7, 1974.

30. "Progress in Satisfying Environmental Requirements," W. E. Patterson, American Power Conference, April, 1974.

31. "Facilities Task Force Report, Fossil Fuel Power Generation," Project Independence Blueprint, Federal Energy Administration, November, 1974.

32. "Radiation Noise From Large Natural Draft and Mechanical Cooling Towers," G. A. Capavo and W. E. Bradley, ASME 74 WA/HT-55.

33. "Power Plant Cooling Comparison," Dale H. Brown, GE Research and Development Center, January 30, 1974.

34. "Dry Cooling Tower Plant Operation: An Economic Loading Approach," P. Leung, in Dry and Wet/Dry Cooling Towers for Power Plants, ASME, 1973.

35. "Cost Comparison of Dry Type and Conventional Cooling Systems for Representative Nuclear Generating Plants," J.P. Rossie, E. A. Cecil and R. O. Young, U.S. AEC, TID-26007, March, 1972.

36. "Concurrent Reduction of Draft Height and Heat Exchange Area for Large Dry Cooling Towers," F. K. Moore and T. Hsieh, Journal of Heat Transfer, August, 1974.

37. Journal of the Water Pollution Control Federation, 46, 813, 1974.

38. Editorial On Coal, Electrical World, pp. 7, December 15, 1974.

39. "Coal-Bituminous And Lignite in 1973," Mineral Industry Surveys, U.S. Bureau of Mines, January, 1975.

40. "Transportation Cross-Cut Study," Project Independence Blueprint, Federal Energy Administration, November, 1974.

41. "Using Waterways to Ship Coal," Coal Age, July, 1974.

42. "Coal Slurry Pipelines," D. S. Smith, Submitted to Workshop on Legal and Institutional Problems of Electrical Facility Siting, February, 1975.

43. "Economics of Slurry Pipeline Systems," T. C. Aude, T. L. Thompson and E. J. Wasp, at Hydrotransport 3, Colorado School of Mines, Golden, Colorado, May 15-17, 1974.

44. Private Meeting with C&O; B&O Railroad.

45. Private Meeting with Burlington Northern Railroad.

46. "Monthly Report of Cost and Quality of Fuels for Steam Electric Plants," FPC Staff Report, Form 423, October, 1974.

General References

"Canals Cool Florida Station Discharge," Electrical World, August,15, 1974.

"Dry and Wet/Dry Cooling Towers for Power Plants," ASME IITD Volume No. 6, November 11-15, 1973.

"Cooling Tower Practices," T. D. Koflat, Power Engineering, January, 1974.

"An Advanced Optimization Technique for Turbine, Condenser, Cooling System Combinations," L. G. Hauser, K. A. Oleson, R. J. Budenholzer, American Power Conference, Volume 133, 427-445, 1971.

"Cooling Towers for Large Steam Electric Generating Units," R. D. Woodson, Electric Power and Thermal Discharges, editors M. Eisenbud and G. Gleason, Gordon and Breach, 1969.

"Managing Waste Heat with the Water Cooling Tower," J. B. Dickey and R. E. Cates, 2nd edition, the Marley Co., Mission, Kansas, 1973.

"Plume Behavior and Potential Environmental Effects of Large Dry Cooling Towers," D. W. Kearney and B. E. Boyack, Dry and Wet/Dry Cooling Towers for Power Plants, ASME, 1973.

"Design of Dry Cooling Towers for Use With a Direct Cycle HTGR," A. R. Foster, S. A. Lamkin and P. Kowk, ASME 73-PWR-7, 1973.

"New Methods Build Cooling Tower Fast," Electrical World, August 15, 1974.

"Cooling Towers - Power Special Report," Power, March, 1973.

"Power Parks a Preliminary Analysis," Energy Policy Branch, Office of Planning and Analysis, U.S. AEC, September, 1973.

"Power Plant Capital Costs Going Out of Sight," F. C. Olds, Power Engineering, August, 1974.

"1000-MWe Central Station Power Plants Investment Cost Study," United Engineers and Constructors, Boiling Water Reactor Plant, Volume II, June, 1972.

The Nuclear Industry - AEC Report Number Wash 1174-74, 1974.

"Results of a Prototype Scrubber Program for the Sherburne County Generating Plant," J. A. Noer, et.al., ASME 74-PWR-14.

"Experience With A Flue Gas Scrubber on Boilers Burning Colstrip Subbituminous Coal," L. R. Kilpatrick and H. E. Bacon, ASME 74-NAIAPC-3.

"Pollution, Precipitators, Problems, and Plans," J. A. Hudson and J. Greco, Combustion, October, 1974.

"The Liquid Effluent Headache," Nuclear Industry, January, 1975.

"Evaluation of Nuclear Power Plant Availability," T. R. Wilson, et al., WASH 1298, January, 1974.

"Reliability and Availability Problems in Power Plant Operation," H. Vetter, Combustion, November, 1974.

"Thermal Power Plant Total Automation Simulator," H. Takenouchi, et. al., Hitachi Review, Vol. 23, No. 8, 1974.

"Experience with Hot Precipitators for Fly Ash Collection in Electric Utilities," A. B. Walker, Combustion, November, 1974.

"Costs of Air Cleaning with Electrostatic Precipitators at TVA Steam Power Plants," J. R. Benson and M. Corn, Journal of the Air Pollution Control Association, Volume,24, No. 4, April, 1974.

"Western Coal Transportation - A Challenge," P. D. Martinka and B. A. Ross, Presented at the 1974 American Mining Congress, October, 1974.

"Energy Parks in Pennsylvania - When, Where and How," E. Reis, E. Kasum, J. Thorpe, Report of PP&L, P.E. and GPU Utilities, March 15, 1974.

"Power Generation Economics," John H. Shortt, Gas Turbine International, January-February, 1974.

1/2.13 TASK 1/2 APPENDIX

Following is a list of questions to which the GE-NSF Energy Park Study Team would greatly appreciate answers in the form of guidance and opinions from those involved in the Pennsylvania Energy Park Study. We feel that any assistance that can be obtained will prevent duplication of effort and will permit the NSF Study to go farther in achieving its goals which should be then good for the utility industry and country in general.

Responses to the questions by the Pennsylvania park planning team have been inserted after each question.

1. What reliability benefits might result from the utilization of Energy Park concepts (duplicate units, trained and available crews, information feedback from other units, simulator-trainers, accessible spare parts, special service center, etc)?

   Although difficult to quantify at this time, the factors indicated here (duplicate units, trained crews, feedback, etc.) should decrease both the forced outage and the planned outage times of the individual units. This would permit either one of two options:

   a. Reduction of installed reserve to meet a given level of reliability, or

   b. A better level of reliability for the same amount of installed capacity. Since an improvement in reliability of the generating system would hardly be noticed by the average customer, I feel we would opt for the first alternative so as to reduce capital expenditures.

2. What availability benefits might result?

   This is related to question #1. How much improvement in availability cannot be stated at this time, but our gut feeling is that it will be significant.

3. How much savings in needed reserve margin is anticipated?

   Some PJM studies have shown that, for an installed capacity requirement in the range of 120% of peak load, a 1% change in the average forced outage rate will result in a 1.4% change in the installed capacity requirement. For example, if the capacity requirement to meet a given reliability level is 1.20 times the peak load, and if the average forced outage rate of the unit

making up the system is 10%, then a reduction in average forced outage rate to 9% will reduce the installed capacity requirement to 1.186 times peak load to maintain the same level of reliaility.

4. What savings in maintenance costs is possible in a park concept?

Besides the direct savings in maintenance costs, operating savings are possible through not only the coordinated maintenance of these units with other units in the power pool to which it is connected. Direct savings in maintenance costs would accrue because of trained manpower, ready availability of spare parts and a more efficient working environment as we move up on the learning curve of the individual types of units.

5. What reduction in capital cost is possible using repeated units of a standard design, minimizing contingency expense, on-site manufacturing facility, modularization, "trained" installation labor force, etc.?

The degree of capital cost saving is dependent upon optimizing the planning, timing, standardization, commitment and other factors indicated in the question. Certainly an opportunity exists in this concept for an entirely new approach to construction methods. A significant savings should be possible if factory fabrication can be substituted for field fabrication. I would also hope that the relative stability of the labor force would result in more productivity per man hour expended.

6. Would on-site "manufacturing" cause undue labor conflicts from the craft unions on the construction crew?

I suspect that one of the underlying causes of conflicts in the construction unions is job insecurity. If job security is assured, as it would be for an energy park, having a continuous construction force for 15 or more years, there would be less inclination to start trouble among the various unions represented on the job. As a matter of fact, if carefully planned in advance, inter-union conflicts might be avoided entirely by promoting organization through a single industry type union rather than through a multiple of craft unions.

7. How rapidly could units be added to a park and could the present long lead items be provided in time to significantly reduce construction cycle times?

This relates somewhat to question #5. At some increase in capital costs the timing of the units can either be speeded up or slowed down with respect to the optimum timing for minimum costs. The timing at any given energy park should be optimized to gain the savings advantage. If additional capacity is required to meet anticipated load growth, it would be better to start another park at another site and build concurrently on it. If plans are firm, commitment can be sufficiently in advance to assure material availability.

8. Are there significant Economic Disadvantages in using smaller units when larger units are technically possible in the latter portion of the Energy Park Installation (Economy of Scale)?

Insufficient studies have been done in this area Again, an optimization exists between the number of standardized units and the improvement in costs because of better technology and economics of scale. The energy park concept is pushing a few frontiers in terms of heat dissipation, transmission and common mode failures and we would not want to push frontiers too hard in terms of technical feasibility of larger units. We should wait for some reliability feedback of actual installations of larger units before making the jump from known technology to unknown.

9. What value can be placed on savings permitted by improved output and fuel use through more efficient use of spare parts, better trained operators and maintenance crews, special tools and techniques, better evaluation of feedback from duplicate units, better operating policies, etc.?

This is another question that can't be quantified as yet. However, savings must be available in these areas since many of the more sophisticated power pools are heading in the direction of feedback from duplicate units, better operating policies, coordination of spare parts, etc.

10. In the case of Fossil Parks, what new modes of coal transportation should be considered in light of the

approximately 200,000 tons of Eastern (high BTU) coal that would be consumed per day?

A 10,000 megawatt fossil fueled park should be located at the mine mouth in order to optimize the fuel logistics. A series of conveyor belts from the shaft openings could be devised to supply the necessary coal. Alternatively, slurry pipelines may hold some promise. It may well be that a combination of all three - that is, unit trains, slurry, and conveyor belts from mine shafts would be necessary to supply the amount of coal required at a 10,000 megawatt park.

11. In the case of Nuclear Parks, what can be said for integrating the fuel recovery and fabrication on the Park site? Would it be economical unless the park was very large?

At this point, we don't really see an energy park of the size that we are considering being able to justify fuel recovery and fabrication at the park site. Our information indicates that a fuel reprocessing plant of 1 metric ton per day would be able to handle 8,000 megawatts of boiling water reactors, and three metric tons per day would handle 24,000 megawatts. On the other hand, an enrichment facility could not be justified for less than 30-35000 megawatts. In addition, the reprocessing facility, if installed at the park site, would limit future expansion of the park to the type of reactor for which the fuel reprocessing facility was designed. A centrally located fuel recovery and reprocessing facility could be constructed to service more than one energy park, and still obtain the benefits of minimizing the fuel transport problems.

12. Is any use of low level heat by a co-located industry expected? If so, how much planning should be done at the early planning stage of the park?

No definitive plans have been made to invite industry to use the low level heat. One of the problems with this concept in the past has been the unreliable availability of such heat. Whenever the plant is down, the heat would not be available. With the energy park concept, ideally 10-15 units being cooled by a dedicated pond, the outage of one or two units would not have a significant effect on the temperature of the cooling pond. Therefore, the availability

of low level heat is assured. The layout of the energy park should provide for future location of satellite industries. It should also be borne in mind that satellite industries might also be attracted by other by-products from the combustion process, such as bottom ash, fly ash, sulphur products and the various trace elements.

13. How are mixed parks - part fossil and part nuclear going to be advantageous economically?

Some of the advantages we see for the combined park would be the use of nuclear exclusion areas for storage of coal and construction of ash basins, reduced risk of shutting down the entire park because of retrofitting due to regulatory arbitrariness and the combined Brayton and Rankine cycle to improve thermal efficiency.

14. Is a large "on-site" factory for fabrication of some of the needed equipment such as piping as well as assembly of smaller subassemblies into large assemblies before moving them to the unit site envisioned? What dollar savings by such a technique is possible?

This question is difficult to answer at this time since we have not yet gotten into the actual construction techniques which might be used at a power park. The GE Co. reports of October 1973 on novel construction methods for nuclear power centers are probably as good a source of information along this line as any available at this time.

15. What means for heat discharge seems most economical for the Pennsylvania Park?

We have to draw a distinction between what is most economical and what is possible. Obviously the most economical means of cooling is once through utilizing run of river. However, this is not possible in Pennsylvania. We should head in the direction of constructing a cooling pond dedicated to utilization by the energy park. This would mean that the water temperature would be unsuitable for fishing, swimming, or other recreational purposes. Supplementary cooling towers might also be required, depending on the economics, the eventual location of the park and the site suitability for construction of a cooling pond. Certainly, makeup water would have to be provided. On the other hand, construction of a couple of ponds on

a large site would provide the potential for future installation of pumped storage to carry some of the peaking requirements. Thus, our thoughts at this moment are to head in the direction of a dedicated cooling pond, and if this proves to be impossible from an environmental standpoint we would then have to back off the cooling towers with sufficient storage for makeup water during low flow periods.

16. How can one evaluate in advance the potential for risks, i.e. common mode failures and natural disasters? How would insurance companies look at parks?

The recently completed Rasmussen Report on Nuclear Safety provides one method of evaluating in advance the potential for common mode failures and natural disasters. Certainly some statistical analysis regarding the frequency of earthquakes, hurricanes, tornadoes, and other natural disasters could be performed for the site which is eventually selected. Statistical analysis would also be available to examine the incidences of failures of the various important components in the energy park. The decision tree techniques utilized by Rasmussen could then be applied to evaluate the potential of such failures causing complete or partial shutdown of the energy park. How insurance companies would view this concept remains to be seen.

17. What consideration to alternate modes for transmission of the generated power has to be given? Would most of the cost benefits for an Energy Park be eroded away by the increased cost of transmission of the power?

We are examining three alternate modes of transmissions namely, DC, 1200kV UHV, and an extension of the existing 500kV system which is prevalent throughout most of Pennsylvania. Until a definite site or sites has been selected for detailed study, it is difficult to say whether the cost benefits of the energy park would be consumed by the increased costs of transmission of the energy by means of electricity would have to be balanced against transmission of the energy via whatever method is used to transport the coal. On the other hand, with nuclear energy centers, which can be located without much regard to the fuel source, the effect of transmission can be significant. We recognize that some undergrounding will probably have to take place in the immediate vicinity of the energy park to reduce the visual impact of all of the lines

terminating at one spot. It is also very possible that undergrounding will have to take place at the other end of the lines as they approach the population centers. Another concept that should be evaluated for the energy park is minisubs rather than the conventional large switchyard structures.

1/2.14 ACKNOWLEDGEMENTS FOR TASK 1/2

The following people from INSTALLATION AND SERVICE ENGINEERING, PROJECTS ENGINEERING OPERATION contributed to this report:

R. Baran
R. Bass, Principal Author
R. Brandon
A. Gapcynski
R. Henss
R. Horton
A. Kozak
J. Parsons
P. Popat
A. Romania
C. Schaus
E. Stewart

Electric Utility Systems Engineering Department employees also contributed to this section. They were:

G. Jordan
R. Moisan
J. Oplinger

A portion of this task was written by S. Rock of the NUCLEAR ENERGY DIVISION.

D. Willyoung, E. Miller, G. Yasenchak and S. Coluccio of the LARGE STEAM TURBINE GENERATOR DEPARTMENT and D. Brown of CORPORATE RESEARCH AND DEVELOPMENT also contributed generously.

Marian Smith, Julia Hewitt and Carmella Lewis of the General Electric Main Library spent considerable time researching recent articles pertinent to this study.

In addition, the aid and collaboration of other companies and their staff is also acknowledged. Among these are:

Foster Wheeler Energy Company	H. Nelken
	R. Sommerlad
	R. Welden
	M. Kraje
Burlington Northern Railroad	T. Kryzer
	R. Petersen
The Chessie System	J. White
Tennessee Valley Authority	H. Parris
Bechtel Incorporated	T. Thompson
Yuba Corporation	R. Shaw
Ingersoll Rand Corporation	C. Drake
Pennsylvania Energy Park Study Team	R. Mulford

Others who may have been overlooked are acknowledged with apology.

TASK 3
TRANSMISSION

Contents

		Page
3.1	INTRODUCTION	3-1
3.2	CONCLUSIONS	3-2
3.3	ELECTRIC POWER DELIVERY CONSIDERATIONS	3-5
3.3.1	Functions of Transmission	3-5
3.3.2	Fundamentals of Power Transmission	3-5
3.3.2.1	Frequency	3-6
3.3.2.2	Surge-Impedance Loading	3-6
3.3.3	Transmission Planning Considerations	3-6
3.3.3.1	Short-Circuit Considerations	3-8
3.3.3.2	Stability Considerations	3-8
3.3.3.3	Transmission Planning	3-10
3.3.3.4	Sharing Investment and Operating Costs	3-11
3.3.4	Choice of Technology	3-12
3.3.4.1	Alternating Current	3-12
3.3.4.2	Typical Study Values	3-12
3.3.4.3	Direct Current	3-14
3.3.4.4	Cryogenic Cable	3-18
3.3.5	Critical Design and Operational Factors for Transmission	3-18
3.3.5.1	Insulation	3-18
3.3.5.2	Corona Performance	3-19
3.3.5.3	Induction Phenomena	3-19
3.3.5.4	Health	3-20
3.3.6	Transmission from Parks and Dispersed Sites	3-20
3.3.6.1	Number of Circuits Required	3-20
3.3.6.2	Number of Circuits at an Energy Park	3-20
3.3.6.3	Contingency Plans for Circuit Outages	3-24
3.3.6.4	Park Outage Consequences	3-25
3.3.6.5	Energy Park Reliability	3-26
3.3.6.6	Building Generation-Transmission Systems of Comparable Reliability	3-27

3.4 FITTING AN ENERGY PARK INTO THE EXPANSION OF AN ELECTRIC POWER GRID 3-29
3.4.1 Overview 3-29
3.4.2 Generation Expansion 3-29
3.4.3 Network Model 3-30
3.4.4 Generation Siting 3-33
3.4.5 Transmission Expansion Procedure 3-33
3.4.6 Expansion Results 3-36
3.4.7 Incremental Transmission Costs of Parks Versus Dispersed Sites 3-42
3.4.8 Real and Reactive Power Losses 3-42
3.4.9 HVDC Transmission Application 3-45
3.4.10 Conclusion 3-47
3.5 TRANSMISSION COSTS FOR PARKS VERSUS DISPERSED SITES COMPARISON 3-48
3.5.1 Overview 3-48
3.5.2 Investment Cost Study 3-50
3.5.3 USA Energy Park Model 3-56
3.5.3.1 Park Siting for Study Purposes 3-56
3.5.3.2 Planning Procedure 3-62
3.5.3.3 Transmission Increase for Entire Park Outage 3-62
3.6 REFERENCES 3-66

TASK 3
TRANSMISSION

3.1 INTRODUCTION -- TASK 3 TRANSMISSION

This report on electric power transmission from dispersed or park sites is divided into three main sections. The first section, 3.3, deals with fundamental principles guiding the planning and operation of a transmission system. Transmission technologies and their costs are presented along with a discussion of their application to generation sites to provide reliable power delivery. Load flow and stability studies on generalized systems were used to confirm conclusions in this section.

The second major section, 3.4, presents a 20-year expansion study of a power pool. Alternate generation siting patterns are used to determine how the transmission network growth is affected by a dispersed siting policy versus an energy parks policy. A broader system representation was used, but with less electrical details included. The completed designs were confirmed with ac load flow calculations.

The third major section, 3.5 develops the general cost and land requirement values used in the economic comparison of parks and dispersed sites. A single year model of the entire USA approximately 30 years in the future was used to gather data on how distance and the general relationship of a park to a scatter of load centers affects transmission costs. Necessarily, this model is more conceptual in nature than the previous two, focusing only on the additional transmission required to satisfy the load growth for 20 years, ignoring the existing generation and transmission. This model was not intended to illustrate a suggested expansion plan, but rather to provide information about a variety of park siting situations relative to loads.

3.2 CONCLUSIONS

Studies using three generation and demand models, spanning the very detailed stability analysis to the very general conceptual analysis of a U.S.A. network in 30 years have produced these conclusions:

A. Electrical power systems can be designed to deliver power from parks without encountering any greater technical problems than those envisioned if dispersed sites are used.

   1. Stability studies have confirmed that two or three 765 kV circuits, properly designed, can deliver power away from 5000 MW to 9000 MW plants located in energy parks.

   2. Twenty-year expansion studies of a sample power pool have illustrated that the park concept can be integrated into an orderly system expansion.

   3. Studies of 59 energy parks serving the major load centers in the US in 30 years have identified the relationships of costs, land use and losses to the distances between parks and load centers.

B. The significant costs associated with energy delivery from parks are investment costs, land use and power losses.

   1. Remote siting of generation whether in a park or at dispersed sites increases the transmission costs at a rate of $10 to $50 per kilowatt for each 100 miles, depending on the location of the park and of the load centers within the U.S. The average cost in this study was $14 per kilowatt per 100 miles. High cost transmission areas may be 2 to 3 times these costs.

   2. Land requirements increase by approximately 1.2 acres per 100 kilowatts for each additional 100 miles.

   3. Annual energy losses increase approximately 1% per 100 miles between generation and load.

C. Electric power system reliability can be maintained at its present level by applying current system design practices as energy parks are introduced.

1. All of the generating units at a park should not be bussed together. A 26,000 MW park will probably consist of from three to five electrically separate generation groups or plants, ultimately connected together by the transmission system interconnecting the load centers. Therefore no single electrical event can directly affect an entire park.

2. The transmission circuits leaving a park ideally will originate at three to five switch yards located along a 2 to 4 mile frontage and disperse over separate routes, thus reducing both the visual impact and the chance for simultaneous outages. For example, using ten 765 kV circuits, each requiring a 200-foot right-of-way, means that only 2000 feet of a several mile frontage will be devoted to transmission.

3. Transmission circuit outages will not be able to disrupt the operation of an entire park because each generation group will be electrically isolated from the others. Contingencies interrupting an entire group of 5000 MW to 9000 MW, will have no greater impact on the electrical system of the future than entire plant outages have today because the interrupted generation will remain at approximately the same percentage of the total capacity that it is today.

4. As parks grow, their size should be limited to 10% of the total generating capacity in an interconnected region. For example, the Northeast Region should be served by at least ten energy parks or their equivalent in dispersed generation. This also means that all of the new generating capacity required by a region in one year should not be installed in just one park.

D. The trend towards longer transmission distances, whether from parks or dispersed sites, increases the incentives for developing technologies to

improve long-distance power delivery capabilities such as a one-cycle breaker to allow increased loadings on long lines at reduced series compensation without jeopardizing system stability.

E. Greater concentrations of power, whether at urban substations or at energy parks increase the incentives for developing current-limiting breakers. At an energy park these breakers would allow bussing of all generation, thus increasing system stability and eliminating the need for one or more 765 kV circuits.

F. Direct current transmission's role in either dispersed or park siting will depend on distance and environment. In general the costs are lower than ac for distances greater than 500 miles using overhead construction and 25 miles for underground construction.

G. Cryogenic cables will have a role in either dispersed or park siting, primarily from the edge of urban areas into the central city.

3.3 ELECTRIC POWER DELIVERY CONSIDERATIONS

3.3.1 Functions of Transmission

Transmission facilities tie the power system together so that generating capacity at various locations may economically supply the system load. Transmission interconnections permit the use of large generators with the resulting "economies of scale" and, in the event of scheduled or emergency outage of generating units, make available alternate sources of generation, reducing the installed generating capacity required on the system.

3.3.2 Fundamentals of Power Transmission

The transmission line voltages for bulk power transmission in the USA are nominally 345, 500, and 765 kV. For the normal three-phase system, these are the voltages that exist between the phase conductors (line-to-line); voltages from the phases to ground (line-to-neutral) are normally the above set divided by $\sqrt{3}$ yielding 199, 289, and 442 kV, respectively. The phase-to-phase voltages and the currents in each phase together represent the power transmitted down the line. Using low voltage and high currents results in high power losses. The same power transfer using higher voltage and lower currents result in larger tower sizes to provide space for insulation[3-1, 3-2].

Power delivery involves two components referred to as real power and reactive power. Real power supplies heat, light, and mechanical movement. Reactive power supplies and is transferred between the magnetic and electrostatic fields of the inductive and capacitive elements of the system. The energy stored in these reactive elements, which cause higher voltages during switching conditions, increase the insulation space required. Reactive power transfers increase the current flow beyond that required for real power delivery increasing the power losses. To reduce these reactive power transfers and to control voltage, capacitors are installed near inductive loads such as motors while inductors are installed near capacitive loads such as underground cables.

For additional reading on the fundamentals of electric power transmission, see references 3-3, 3-4 and 3-5. Miller, Reference 3-3, is a well-written introduction to power generation and delivery.

3.3.2.1 FREQUENCY. The majority of transmission in the USA uses alternating current at a frequency of 60 hertz (cycles per second). Its selection years ago represented a compromise. A higher operating frequency would have resulted in smaller transformers and motors but more difficulties in transmission, particularly in keeping all motors and generators synchronized during transients, referred to as system stability. Lowering the frequency has the reverse effect and in fact for DC, the stability problem has disappeared, but so has the ability to transform voltage. It is very difficult to transform frequency, requiring either rotating equipment or solid-state devices as discussed in Section 3.3.4.3, Direct Current.

3.3.2.2 SURGE-IMPEDANCE LOADING. The concept of surge-impedance loading is a convenient way of comparing the load-carrying capability of lines of different voltage levels. Surge-impedance load (SIL) is the power the line carries when the energy in the magnetic field due to current is equal to the energy in the static field due to voltage.

While surge-impedance loading gives a useful benchmark for comparing the relative load carrying capabilities of different voltage circuits, it is usual to load short lines appreciably above the SIL and, because of stability limitations, to reduce the loadings of longer lines unless series-capacitor compensated. The curve of Figure 3-1, taken from page IV-2-12 of the 1970 National Power Survey[3-8], is representative of loading of uncompensated lines as a function of line length. Figure 3-1 also includes a table of SIL for several voltage levels and conductor arrangements typical of ehv design.

3.3.3 Transmission Planning Considerations

Planning transmission circuits at generating sites whether dispersed or in parks requires answers to three basic questions.

1. How much power is to be transmitted?

2. How far shall it be taken before dispersal?

3. What level of reliability is desired?

The following paragraphs indicate how short circuit currents limit the amount of generating capacity that can be put on one electrical bus, thus setting a limit on how much

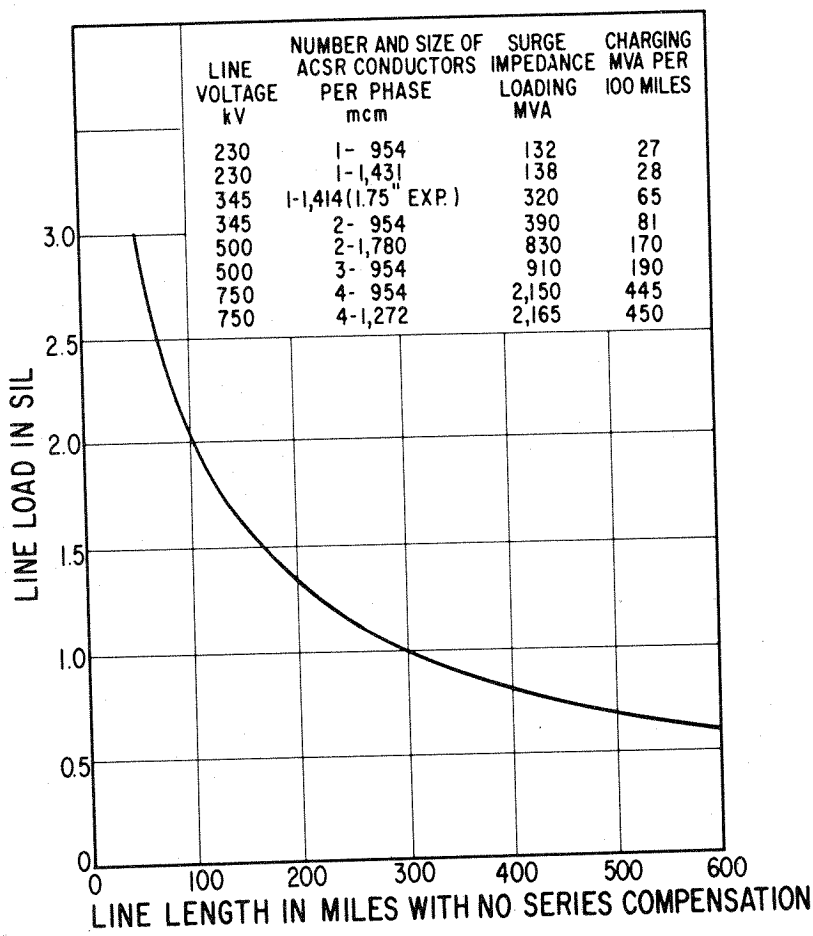

Figure 3-1 Transmission Line Capability in Terms of Surge-Impedance Loading.

power is to be transmitted. Stability considerations, which become increasingly important with distance, either reduce the circuit ratings or require series capacitor compensation or faster circuit breaker operation. The level of reliability will determine whether single or double contingencies will be used in determining transmission capacity.

The result is a description of several park arrangements ranging from three to five generation groups, units bussed together, served by nine to fifteen 765 kV circuits. Ten 765 kV circuits to serve twenty 1300 MW generators will be used as a typical arrangement, Figure 3-2.

3.3.3.1 SHORT CIRCUIT CONSIDERATIONS. The amount of generating capacity that can be electrically connected together is limited by the amount of short circuit current that the breakers can interrupt when a fault occurs. On a 765 kV bus up to 8,000 MW of capacity may be connected without producing short circuits beyond 50,000 amps, the present interrupting capability of 765 kV breakers. Therefore, it is possible to conceive of an energy parks with six 1300 MW units connected to one bus. Park arrangements with four or five units connected together will also be likely where stability or reliability considerations outweight short circuit problems.

3.3.3.2 STABILITY CONSIDERATIONS. A transmission system must be designed so that all generators remain in synchronism under steady-state and transient operating conditions. Although it is beyond the scope of this discussion to treat stability in depth, it is necessary to realize that the power which can be transmitted over a transmission line is proportional to the square of the voltage and is inversely proportional to the inductive reactance of the system. Reactance, which increases with distance, sets a limit on the maximum power which can be transmitted by a line and high voltage is required to transmit large amounts of power over long distances.

For a given system operating at constant voltage, the power transferred is proportional to the sine of the power angle, the stretch in the electrical system between two ends of a transmission line. A transmission system with its connected synchronous machines must be able to remain stable, even during faults that produce sudden changes in generation and load. These changes produce transients on system voltage and power angle. The ability of the system to adjust to a new power angle without loss of synchronism depends upon the

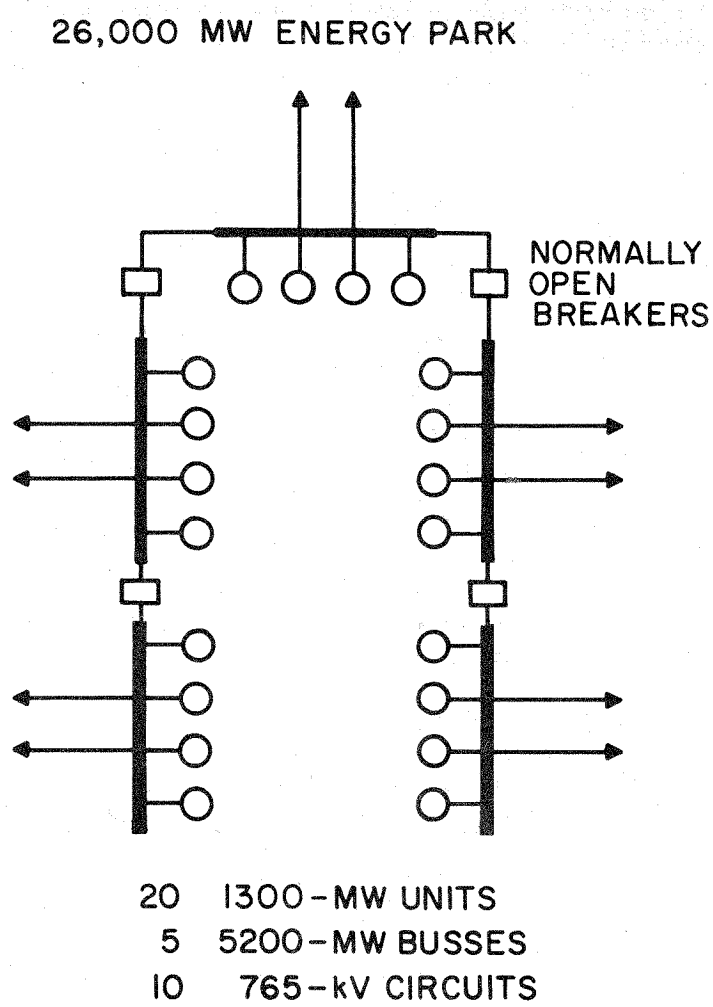

Figure 3-2 Illustrative Electrical Arrangement of an Energy Park.

inertias of the connected machines, and the response of their exciters and the turbine governors, as well as on system voltage and reactance. The transient stability criteria usually require that transmission line loading be limited to a value appreciably below the steady-state stability limit.

Line reactance increases with line length and the phase spacing. It decreases as the number of conductors per phase increases. Thus, a bundled-conductor line has lower reactance and higher stability limits than a single-conductor line with the same phase spacing. One method for raising the loading limits on stability limited lines is to use series capacitors which cancel part of the inductive reactance. This cancellation electrically shortens and stiffens the network. Another method for increasing system stability is to interrupt the disturbance faster, shorten the fault clearing time. A recent study indicated that a 765 kV line carrying 4500 MW for 100 miles could save 450 MVAR of series compensation, worth approximately $5 million, if the fault clearing times could be reduced from 2½ to 1½ cycles[3-7]. These savings increase the likelihood of developing faster fault-clearing capability.

A third method of increasing stability limits would be to develop and apply current-limiting breakers. For example, this same GE study found that four six-unit nuclear plants representing 31.2 GW of generating capacity could be served by just eight 765 kV circuits if the plants could be tied together[3-7]. The emergency flows during a one circuit outage would amount to only 4500 MW per circuit. With current limiting breakers in position between each of the plants, a fault on one circuit would be seen by only one plant and after the fault is cleared, the other three plants act to stabilize the fourth. Without current limiting breakers a third circuit would be required from each of the four plants.

3.3.3.3 TRANSMISSION PLANNING. The utility industry tests the reliability of power systems by certain criteria to represent the credible events that may occur. The conceptual plans developed in this study were designed to pass the following criteria which approximate those used when deciding to add new circuits.

1. The transmission network planned shall have sufficient capacity to allow peak load and off-peak economic generation dispatches, load allocations, with all circuits in service.

2. In addition, the network shall be planned to allow economic dispatch at peak load with any two generating units out of service, and with the circuit ratings increased 25%, representing emergency values.

3. The network shall also be planned to allow an economic dispatch at peak load with any single circuit out of service or any two circuits at a generating plant out of service, again with the circuit ratings increased 25%.

The network plans developed using these three criteria indicate the general magnitude of the transmission requirements in number of circuits, land and dollars. However, they are only conceptual in nature and require a planner's judgement, experience, and creativity before being applied to individual situations. For example, a skilled planner may modify criteria (3), which requires three transmission circuits at any generating plant, if the plant is remote to a system which is able to withstand its sudden loss. Two circuits instead of three might be used in such a situation.

Transmission planning criteria are so dependent on local situations that plans developed nationally to a single set serve only to indicate general cost trends. The National Electric Reliability Council, Research Park, Princeton, New Jersey, can give guidance when specific power delivery situations are being considered.

3.3.3.4 SHARING INVESTMENT AND OPERATING COSTS. The sharing of transmission circuit investment and operating costs is one of the major non-technical problems that will need resolution as circuits from remote generating sites cross several service territories to deliver power for different utilities. The problem may be illustrated by the hypothetical example of utility A wishing to install a circuit from one portion of its territory to another portion and crossing part of Utility B's service area. Should A be entirely responsible for the installation costs and operating costs? What if a year or two later utility B taps the line for power. How will the sharing of costs change? Utilities have worked out financial agreements for specific situations frequently related to the portion of the line in each service area. As energy is moved from one utility over lines of another "wheeling" charges are incurred. The five discussants of the LeVesconte paper, Reference 3-8, provide valuable insights into interconnection contracts.

3.3.4 Choice of Technology

3.3.4.1 ALTERNATING CURRENT. AC transmission advances during the past half century have gradually increased voltage until today the extra-high voltages (EHV) of 500 kV and 765 kV, are employed to deliver large amounts of power over long distances. Whether ultra-high voltage (UHV), beyond 800 kV, will appear in the 1980's depends on a variety of factors. Research demonstrates that operation at voltages between 1100 and 1300 kV is technically within reach after expected engineering refinements perfect insulation, corona performance, and power density. At present, the transmission technology for 765 in the US (735 kV in Canada) is well advanced in use and research. Fortunately, the electric power industry recognized the need for research in this field and a prime example of this support was Project EHV where many facets of 765 kV transmission were explored[3-1]. Currently this research project, now Project UHV, is continuing with investigation in the uhv range.

3.3.4.2 TYPICAL STUDY VALUES. The investment costs and power carrying capabilities of 345 kV, 500 kV, and 765 kv to be used in the following transmission expansion analysis are shown in Table 3-1. For example, at 50 miles a 345 kV circuit may be loaded to 1000 MW during normal operation. Normal ratings for 345 kV range from 600 MW to 1700 MW depending on the number of conductors and their size, with 1000 MW being a typical value. At 250 miles stability considerations reduce the ratings of circuits to approximately 60% of the 50-mile rating. Again, these values vary widely depending on conductors and also depending on series compensation, as discussed in Section 3.3.3.2. The 60% reduction in rating at 250 miles assumes no series compensation but does assume that the circuit is being added in a network context where there is some amount of parallel capacity.

The land requirements, costs, and power losses shown in Table 3-1 are taken from the 1974 report for Project Independence Blueprint, Reference 3-9. The line costs are January 1974 estimates based on statistics gathered for construction in the 1970's. The range of variation between different lines makes applying these numbers very difficult. For example, the 345 kV line costs were found to vary between 50 and 100 thousand dollars per mile in the eastern third of the US with certain portions of urban construction with many zig-zags costing three times above these numbers. The central portion of the US typically has lower construction costs than either the East or West. The transmission plans

Table 3-1 Costs and Power Carrying Capabilities of Overhead Transmission Circuits

Costs are estimated as of January, 1974*

1.	Voltage: Nominal	345kV	500kV	765kV
	Maximum	362kV	550kV	800kV
2.	Capacity: 50 Mile	1000MW	2400MW	5500MW
	250 Mile	625MW	1500MW	3300MW
3.	Land: Route Width	150 ft.	175 ft.	200 ft.
	Acres/Mile	18	21	25
4.	Line Cost: Million $/Mile East	0.081	0.151	0.236
	West	0.059	0.113	0.206
	Central	0.051	0.059	0.102
5.	Terminal Cost: Million $/Line (excluding transformers)			
	50 mile	3.175	4.900	8.700
	250 mile	4.415	6.475	13.500
6.	Incremental Terminal Cost (Park less dispersed) Million $/Line			
	50 mile	-	0	5.525
	250 mile	-	1.575	10.325
7.	Transformer $/MW			
	Generator Step Up	1900	1900	1900
	Step Down (Auto)	2600	2600	2600
8.	Power Losses: Percent of yearly energy delivered per 100 miles	1.0%	1.0%	1.0%

* CAUTION: As of April 1975 these costs, which were derived from industry reported values in the early 1970's, appear to be ½ or 1/3 of their present values.

developed later in the study were costed using all three values to indicate the range of costs if parks were used in each of the three sections of the US.

The terminal costs in Table 3-1 include three breakers, representing a breaker-and-a-half switching arrangement at both terminals to interrupt faults, disconnect switches to isolate parts of the switchyard for maintenance, bus work to connect equipment, relay equipment to control the breakers for equipment protection, and communication equipment for control signals. At 50 miles the terminals also include shunt capacitors for reactive kVA control. At 250 miles the terminals included shunt reactors for voltage control and no shunt capacitors. In addition, the 250 miles line terminals include an intermediate switching station with three breakers. There is no industry standard switchyard design and the number and rating of the various components vary widely. The costs for transmission circuit terminal in Table 3-1 are developed from the averages reported for the Project Independence Blueprint, Reference 3-7.

The incremental terminal costs shown in Table 3-1 were used in costing the USA model in Section 3.5. Instead of applying the full terminal costs in this USA model each line was viewed as replacing a very short line in the dispersed plan. At 500 kV there would be no additional terminal cost while at 765 kV the costs would be the difference between 345 kV and 765 kV.

Transformers were treated separately because the amount of power to be stepped up from the generator voltage to the transmission voltage and then stepped down to the subtransmission voltage will not be significantly affected by dispersed or park siting. Therefore, their costs are common to either alternative.

The losses in a transmission line which are a function of loading and distance have been stated on the basis of the total energy delivered during a year. When a line is fully loaded the losses may be as high as 3% per 100 miles. However, loadings vary by time of day and year and by position of the line in the power grid. Therefore, the losses on a 765 kV line recently studied, 17 MW per 100 miles when carrying 2000 MW, nearly 1% per 100 miles, were taken as presentative of the energy loss for transmission distance.

3.3.4.3 DIRECT CURRENT. The advent of HVDC solid-state terminal equipment, and its successful application in the Eel River tie, presents the line designer with a practical alternative to EHV and UHV transmission[3-10,3-11,3-12].

The use of HVDC for transfer of energy from generation over long distances to load areas is an attractive alternative. It is now being applied on the Square Butte Project transmitting power from central North Dakota 450 miles to Duluth, Minnesota. It is being applied to transfer power to Vancouver Island in British Columbia over a circuit consisting of sections of cable and overhead line. Large blocks of hydro generation in northern Manitoba are being transmitted to Winnipeg 575 miles to the south. A prototype gas-insulated HVDC station for metropolitan application is now being supplied for installation on the Consolidated Edison system under EPRI sponsorship.

The above HVDC systems now being built contain all of the essential elements of future HVDC systems: high capacity circuits (i.e., 2000 MW per circuit with 100% emergency overload), switching for permanently faulted lines, cables and compact metropolitan terminals.

Table 3-2 shows a comparison of the major features of HVDC and ac transmission systems[3-7]. The incentives for using dc include economic, performance, and environmental factors. Economic comparisons show that the savings in overhead line cost for dc can offset the higher terminal cost so that for distances of 500 miles or more the dc has a cost advantage. For cable systems, this dc advantage occurs for 25 miles or more. Performance advantages for dc include rapid change of power which aids ac system stability, providing for nonsynchronous ties between ac systems, and its ability to import power without increasing ac system short-circuit levels. Environmental advantages include smaller transmission towers with less right-of-way and hence less visual impact. Compare 150 ft. in Table 3-3 to 200 ft. in Table 3-1. Where underground circuits are required, dc can be utilized to advantage. Rapid advances in station design permit metropolitan application of high capacity dc terminals.

Table 3-3 compares cost and power capabilities of 345 kV ac cables to dc ±400 kV cables and a ±750 kV overhead line to two 765 kV circuits at 500 miles. At the present time, cable manufacturers have indicated a willingness to provide dc cables up to 600 kV to ground. HVDC overhead lines in excess of ±500 kV have been undertaken in several applications and ±750 kV is being applied in the Soviet Union. Generally dc cable circuits become economic when longer than 25 miles while overhead circuits become economic above 500 miles in length.

TABLE 3-2 COMPARISON OF HVDC TO AC

GENERAL

RELIABILITY

Excellent for line and station
Operates with reduced voltage

POWER FLOW

Easily controlled
Greater right-of-way power density
Asynchronous tie capability
No stability problems
Enhances stability of dual ac/dc system

OVERHEAD TRANSMISSION LINE

TOWER AND LINE

Lower tower height
Less right-of-way width
Only two conductor sets, not three
No transpositions necessary

INSULATION

Lower surge levels
More contamination problems
Less lightning trip-out severity
Bi-polar line as reliable as 2-ckt. ac for lightning

RADIO NOISE

Less radio interference in rain than during dry weather

CORROSION

Requires ground electrode system
DC ground current travels far underground (beneficial)

CABLE

Major advantages over ac
No reactive power limitations
No di-electric losses

HVDC TERMINAL

EQUIPMENT

More expensive
More elaborate

HARMONICS

Requires filters

RADIO NOISE

Produced by valve action
Requires shielding for local containment

Table 3-3 Costs and Power Carrying Capabilities of Special Transmission Circuits

Costs are estimated as of January, 1975

1.	Type:	A.C.	D.C.	D.C.	A.C.
2.	Voltage: Nominal Maximum	345 kV 362 kV	± 400 kV	± 750 kV	765 kV 800 kV
3.	Construction:	High Pressure Oil Filled Cable, Cooled	High Pressure Oil Filled Cable, Cooled	500-mile Overhead (Bi-polar)	500-mile Overhead (2 lines)
4.	Capacity:	700 MW	1000 MW	5000 MW	5000 MW
5.	Land: Route Width Acres/Mile	- -	- -	150 ft. 18	400 ft. 50
6.	Line Cost: Million $/Mile	1.40	0.50	0.28	0.60
7.	Terminal Cost: Million $/Line	3.2	70	325	100
8.	Power Losses: Percent of yearly energy	-	-	4.0%	5.0%
9.	Terminal losses per line (2 terminals)	-	2.3%	2.3%	0.4%

3.3.4.4 CRYOGENIC CABLE. Transmitting electric power by cryogenic cable offers an attractive solution to many of the environmental disadvantages encountered with both ac and dc overhead transmission: insulator contamination, corona effects (RI, TVI, audible noise, etc.), ground electrostatic fields, lightning, large towers, right-of-way requirements and aesthetics. Current research indicates that a cryogenic cable system operating at 345 kV may be expected to have a 2000 MVA capability and at 500 kV 3500 MVA capability[3-7]. These cables are expected to aid in delivering power from substations on the edge of a metropolitan area into the central-city. Their application will be little influenced by the dispersed versus park siting decision since in either case power will be gathered at these peripheral substations for delivery into the city.

3.3.5 Critical Design and Operational Factors for Transmission

An overview of a transmission system reveals several broad technical areas of concern relative to design and operation. Among these areas are; insulation, corona performance, induction phenomena, and stability.

3.3.5.1 INSULATION. The optimum economic selection of equipment whether it be voltage control devices or transformers and circuit breakers depends on good insulation coordination. This implies adequate control of overvoltages on the transmission system and protection of internal insulation by surge arresters. These overvoltages may either be due to switching, lightning, faults or load rejection or combination. Switching surge overvoltages on EHV lines have been held to near 2.0 p.u. by use of single-step closing resistors in the breakers. Added reduction would be possible by application of two step pre-insertion resistors. The higher the system voltage, the more economically feasible the use of surge control becomes. This is due to the nonlinearity of the critical flashover voltage and the greater savings in tower cost that can be realized for the larger towers used at EHV and UHV. Lightning overvoltages are always present but have less effect on transmission design at higher voltages because of the switching surge insulation required. If adequate care is taken to prevent shielding failures by use of good shielding angle practice, vertical angle between overhead ground wires and outer phase conductors made small, then lightning will not play a dominant role in line design.

3.3.5.2 CORONA PERFORMANCE. Corona performance has to do with the partial electrical breakdown of any of the insulating media in the power delivery system. The consequences of these discharges are to produce corona loss, radio noise, audible noise, ozone, and a general spectrum of low intensity radiation up to and including visible and ultraviolet light. Where terminal equipments are concerned, and especially for internal insulation which is usually not self-healing, only a small amount of corona can be tolerated. The normal design procedure for these equipments results in low corona. For the exposed transmission line, however, the corona discharges occurring on the surface do no permanent damage and the design of the line for corona is predicated on one or more environmentally acceptable levels of the various corona discharge parameters.

All of these parameters (radio noise, audible noise, ozone, etc.) are affected by the electric field at or near the surface of the conductor. For a fixed line voltage, the size and number of the conductors in a phase, phase spacing and phase height are controlling factors in determining the electric field. In addition to the magnitude of the field, its rate-of-change away from the conductor must be assessed because a high rate-of-change will limit the severity of the discharge. Of importance for each of the phenomena associated with the discharge process is how each is transmitted to say, an observer at the edge of the right of way. For example, the radio noise disturbance is an accumulation of electromagnetic noise energy propagated for some distance down the line. An audible noise disturbance, on the other hand, is a more localized accumulation of noise energy dependant on sonic transmission in air.

3.3.5.3 INDUCTION PHENOMENA. The term 'induction phenomena' covers both electrostatic and electromagnetic induction from the transmission line to objects at the ground level. These effects are strongest in the area of the right-of-way and diminish with distance from the line. For ehv and uhv lines, the electrostatic field at the edge of the right of way has become a factor of importance because its effects have become distinctly perceptible by people in the vicinity of the line. Magnetic field induction has, so far, not been a problem. All of the induction phenomena are easily calculable and design for this parameter is usually based on values found generally acceptable from subjective tests and other experience.

3.3.5.4 HEALTH. To date, none of the various corona discharge parameters or induction phenomena have been found to be injurious to human health at present levels from transmission lines. They are considered as nuisance values and have been assessed as such through the use of various subjective 'signal-to-noise' ratio acceptability scales and other criteria.

3.3.6 Transmission From Park and Dispersed Sites

3.3.6.1 NUMBER OF CIRCUITS REQUIRED. Delivering power from a generating plant requires a transmission network with sufficient capacity which for this study means permitting two circuits out of service with no rescheduling of generation or providing additional generation reserves capable of withstanding the sudden loss of the total plant output. In the Eastern and Central US, where short distances are encountered, at least three circuits would normally be provided at a plant, see column (4) of Table 3-4. For example, a 1770 MW plant in 345 kV territory would require four circuits each with emergency rating of 1250 MW to serve the two 885 MW generating units during a double circuit outage.

Increasing the voltage, which increases the capacity, does not reduce the number of circuits below the minimum of three circuits for double outage protection. For example, three 765 kV circuits would be required at the same plant size that could be served by three 500 kV circuits. The voltage used at a plant is established by future needs and surrounding network requirements and not on just the plant rating. If, because of distance, it is more economical to provide generating reserve elsewhere in the system and protect only the outage of one circuit, then a minimum of two circuits would be used, column (3) of Table 3.2. For the parks versus dispersed site comparison in this report, double outage protection was used, interpreted to mean one circuit suddenly tripped while a second circuit is on maintenance.

3.3.6.2 NUMBER OF CIRCUITS AT AN ENERGY PARK. A preliminary analysis of the number of circuits needed at an energy park of 26,000 MW is summarized in Table 3-4. If 20 units are grouped into five plants, each with four 1300 MW units, the resulting 5200 MW of capacity can be transmitted on two 500 kV circuits or one 765 kV circuit. Adding reserve for any single circuit outage increases the circuit require-

Table 3-4 Examles of Circuit Requirements at Generating Plants

Plant Size (1)	Voltage Level Used (2)	Number of Circuits Needed: Single Outage Protection (3)	Double Outage Protection (4)	Two Simultaneous Outages (5)
1770 MW Two 885-MW units	345 kV	3	4	4
	500	2	3	3
	765	2	3	3
2150 MW Two 1075-MW units	345	3	4	4
	500	2	3	3
	765	2	3	3
2600 MW Two 1300-MW units	345	3	4	4
	500	2	3	3
	765	2	3	3
5200 MW Four 1300-MW units	345	5	6	6
	500	3	4	4
	765	2	3	3
26,000 MW Park Five groups of four 1300-MW units	500	15	15	20
	765	10	10	15
26,000 MW Park Four groups of Five 1300-MW units	500	16	16	20
	765	12	12	16
26,000 MW Park Three groups of six 1300-MW units plus a two unit bus	500	14	14	18
	765	11	11	15

ments by one resulting in three 500 kV circuits per plant, a total of 15, or two 765 kV circuits per plant, Figure 3-3, a total of 10. During the scheduled maintenance on a transmission line the units at a park could be switched to prepare for a second outage. The switching would produce two groups of six units, one with three circuits connected and the second with just two circuits, Figure 3-3. Units in this second group would be restricted in output to the rating of a single circuit in anticipation of a fault on one of the two lines. The lines would be routed on separate rights-of-way to minimize the chance of simultaneous faults. If it is necessary to protect against simultaneous faults on two circuits then three circuits rather than two must be constructed at each plant, requiring a total of 15 765 kV circuits at a 26,000 MW park. The additional circuits may not greatly increase reliability. If two circuits cannot be placed on separate routes then placing three circuits on the same route may not greatly improve reliability, but it will greatly increase the costs.

Using larger groupings of units at a park does not appear to offer the opportunity to reduce the number of circuits. As Table 3-4 indicates, four groups of five units, 6500 MW plants, require four 500 kV circuits per plant or three 765 kV circuits, increasing the total number above the five group, four unit arrangement. The three group, six unit plant arrangement offers some benefits, requiring four 500 kV or three 765 kV circuits per plant for single outage protection. However, since only 18 units can be accommodated in this scheme, the remaining two units require two circuits, resulting in a total of 14 500 kV or 11 765 kV circuits. Energy parks sized to integral numbers of six unit plants, 7800 MW each, appear to require four 500 kV circuits per plant or three 765 kV circuits per plant.

Energy parks with five plants of four units each and ten 765 kV circuits plus the ability to reconnect units during planned line maintenance appears to offer an acceptable compromise between reliability and cost. Energy parks will accrue some savings in transmission over dispersed sites because of the fewer number of circuits per 5200 MW bus, three 765 kV circuits per plant for dispersed sites versus two 765 kV circuits per plant at an energy park. But the savings have been too difficult to quantify in a general study because the length of the third circuit depends on the location of other plants or substations in the area and not on the distance from generator to load, the major parameter of this study. Therefore, this particular aspect of energy parks remains to be evaluated for each unique application. In Section 9, the economic comparison of parks and dispersed

NORMAL ARRANGEMENT: Five Isolated 5200-MW Buses with Four 1300-MW Units Each.

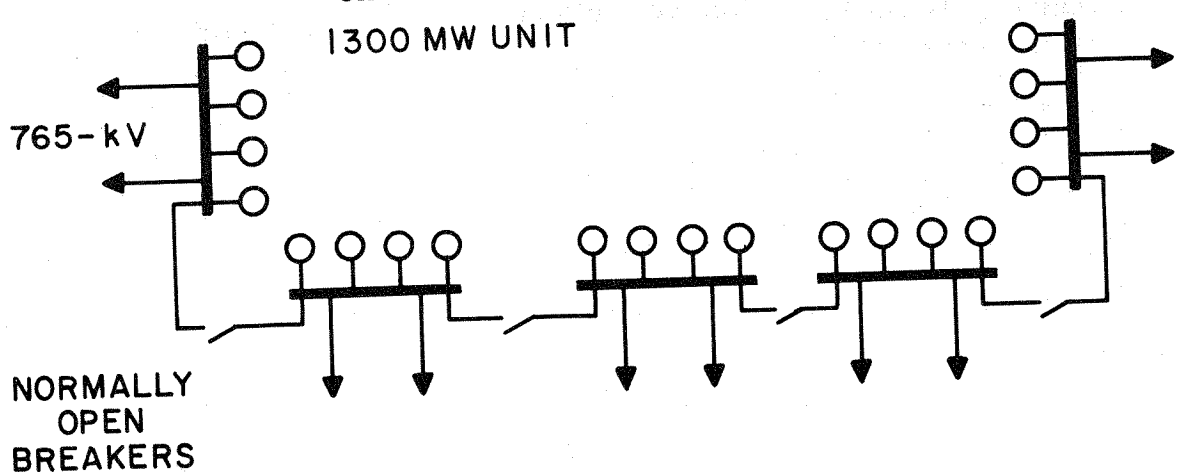

SINGLE-LINE MAINTENANCE: Units Switched to have at Least Two Circuits Connected to Each Bus.

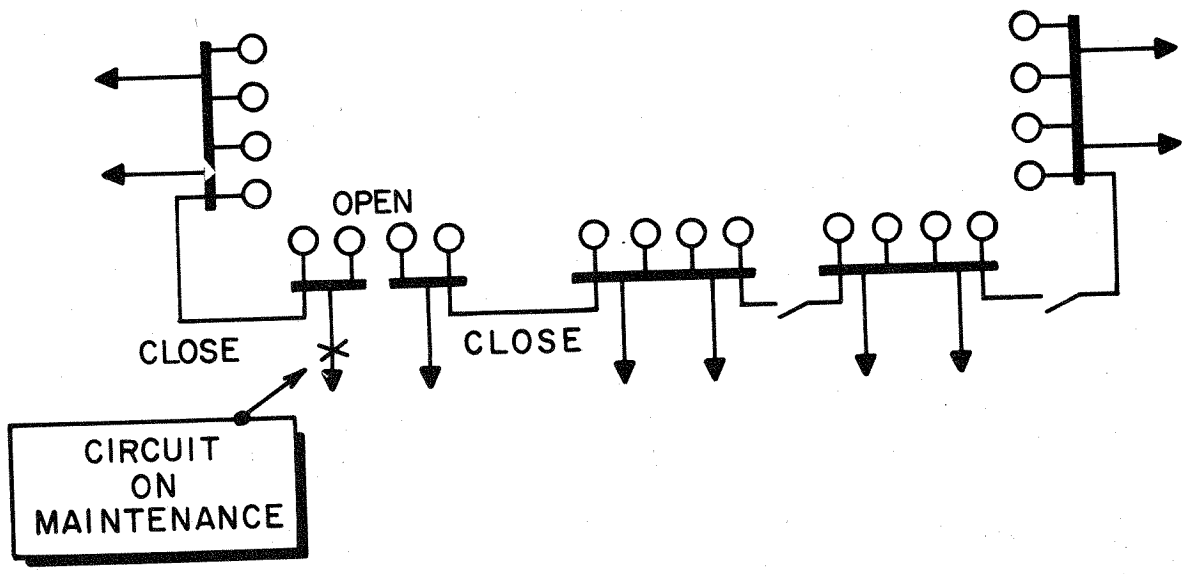

Figure 3-3 Illustrative Arrangement of a 26,000 MW Energy Park During Normal Operation and Single-Line Maintenance

sites, the parks are not credited with any savings attributable to the reduction in the total number of circuits required. This is a result of the assumption that transmission costs are only a function of distance to load and total installed generating capacity, and not the proximity to other buses. For example, in Section 9 transmission costs at a 5200 MW mini-park are one-fifth of the costs of a 26,000 MW park.

3.3.6.3 CONTINGENCY PLANS FOR CIRCUIT OUTAGES. Each generating plant will be connected in such a manner that the sudden loss of any single circuit, such as caused by a lightning stroke, does not interrupt or limit the output of the plant. The NORMAL ARRANGEMENT in Figure 3-3 provides two circuits at each plant, each capable of delivering the full output of the four units so that when one circuit trips, power delivery continues uninterrupted. When it is necessary to take one circuit out for maintenance six units will be bused together as shown in the second arrangement. One bus will connect six units to only two circuits while the other bus will connect six units and three circuits. If, during this circuit maintenance one of the two circuits at the six unit bus trips open to clear a fault, then two units will also have to be tripped. Most likely unit maintenance would be coordinated with line maintenance so that no more than five units would be operating on the two-line bus and their output could be reduced to a total of 5200 MW for the 8 to 12-hour circuit maintenance period.

What if both circuits at a plant are interrupted suddenly when carrying full power output? The system would lose 5200 MW or less depending on the dispatch at the time. Losing 5200 MW on a 1975 system would be a severe interruption. However, the first 5200 MW plant would not be completed until about 1990 when the entire system would be increased in size, thus making the outage effects closer to a 2000 MW outage today. The potential for outages of 2000 MW are not common today but there are examples. In 1975 the MOHAVE Plant in Nevada rated 1630 MW is served by just two circuits, 500 kV in this case. The system is designed to provide power continuity to users even after the sudden interruption of the two circuits.

The sequence of unit and circuit additions at a park can be arranged to limit the number of units electrically bused together. For example, a more detailed study may indicate cost savings by installing only two or three units

on one bus and then proceeding to start a new bus with its own transmission, thus limiting the magnitude of the double line outage. The final units on the bus can be added later in the park development.

3.3.6.4 PARK OUTAGE CONSEQUENCES. The park capacity will be increasing in magnitude more rapidly than the surrounding system and thus the impact of a total park outage will increase with each unit addition. When completed, a 26,000 MW park will have an outage impact similar to the simultaneous outage of 6200 MW in 1975.

The equivalence of 6200 MW in 1975 to 26,000 MW in 30 years was computed by assuming that in the 30 years required to complete a park, the electric power system has grown to four times today's size an average annual load growth of 5%. The loss of 26,000 MW in the future system or 6200 MW on today's system will cause frequency to dip triggering load shedding and blackouts in the area served directly by the pool. By proper transmission design including under-frequency relays for load shedding the sudden outage of the total energy park will not by itself be sufficient to cause a complete system breakup.

After the park outage full service to users can be restored as rapidly as additional capacity can be brought on line, probably within 4 hours. Since the park may represent 25% of a pool's capacity, nearly equal to its installed reserve, capacity from neighboring pools will be required. This capacity from neighbors, which may have provided as much as 80% of the lost capacity, 20,000 MW, during the first hour after the outage, will probably remain at about 25%, 6500 MW, until capacity in the park can be restored.

The park may be 25% of a power pool's capacity, but it will be less than 8% of a region's capacity. This assumes that 90,000 MW region of today becomes 4 times larger at the completion of a park, 360,000 MW. With generation reserves maintained at 20% there would be sufficient capacity within a region to replace capacity after a park outage.

The transmission network costs reported in the following sections assume that transmission capacity will be provided to prevent blackouts when one bus, 5200 MW, trips out at a park. However, the simultaneous outage of the five buses at a park is protected only by having sufficient capacity to recover from the blackouts caused by the sudden

outage. The additional transmission costs to eliminate even these blackouts were estimated by providing a region with sufficient capacity to import 26,000 MW simultaneously. This additional capacity increased the total transmission costs by 10% and land use by 11%. Section 3.5.3.3 elaborates on this study.

3.3.6.5 ENERGY PARK RELIABILITY. Will energy parks have better or worse reliability than dispersed sites? It is our opinion that from the electrical power user's viewpoint there will be no distinguishable difference for the following reasons.

Factors tending to make energy parks more reliable than dispersed-site units include shortened repair times due to standardized systems and on site storage of spare components such as transformers, pumps, and other major equipments.

Factors tending to make energy parks less reliable than dispersed-site units include:

(1) Common mode failures due to proximity initiated by events such as explosions, strikes, military actions, and natural disasters;
(2) Failure due to transmission distance.

Failures which increase with transmission distance such as tower outages, and conductor flashovers are discussed the next section, where the increased system reserve due to additional distances between generator and load is shown to be in the order of $0.01/kW-Mile.

The common mode failures of parks due to explosions, strikes, military actions and natural disasters while rare in occurrence, make parks less reliable than dispersed sites. But since no more than 8% of a region's capacity should be located in one energy park as discussed in Section 3.3.3, the consequences to the user are expected to be only a few hours blackout.

We believe that it is reasonable to assume that the increased reliability of the individual units in parks will offset the decrease in reliability due to common mode failures. Therefore, in our economic analysis neither reliability benefits or consequences are specifically quantified and included.

3.3.6.6 BUILDING GENERATION/TRANSMISSION SYSTEMS OF COMPARABLE RELIABILITY. To provide the utility customer with comparable service continuity whether the power generator is next door or hundreds of miles away requires a combination of transmission circuits and local emergency generating capacity.

Assume an operating power transmission grid and two alternative sites for the next generating unit, one near the major load center and one site 100 miles from the major load center. In the near-load case the loss of generation is caused by the power plant outage, for there is no significant transmission between generator and load. This outage time is 15 to 30% of the year depending on the number of weeks required for boiler, turbine and generator maintenance, refueling (if a nuclear unit), inspections and unplanned outage. Unplanned or forced outages represent approximately one-third of the outage time.

As the generating unit is moved 100 miles away from the load an almost imperceptible increase in unavailability is incurred. A 100 mile 345 kV transmission line has a total outage time of 1% of a year. But power plants are connected to a load by at least two transmission lines, not on the same route, both of which are capable of carrying the total plant output. So the amount of time that the plant is isolated from the load due to transmission outages is at most (0.01)(0.01) = 0.0001, one-hundredth of one percent of the time.

The outage time of the entire plant is increased by the increased outage probability due to line length. Assume a four unit plant connected to the load centers by two 765 kV circuits. The probability of the entire plant being out is (0.1)(0.1)(0.1)(0.3) x 4 = 0.0012, the probability of having one of the four units on either planned or forced outage (0.3) and the other three units forced out (0.1). The probability of the plant outage, 0.0012, is twelve times larger than the time that the 100-mile transmission system isolates the plant.

The outage time of transmission circuits increases linearly with distance to 0.02 at 200 miles and 0.03 at 300 miles so that the time when they both are out would appear to be more significant, 0.0004 at 200 miles 0.0009 at 300 miles. However, intermediate switching stations every 100 miles reduce this probability to having two parallel segments of a longer line out. (2) * (.0001) at 200 miles and (3) * (.0001) at 300 miles, still much less significant than the generation plant outage time.

Cost penalties for generation or transmission outages may be calculated by assuming that the capacity of the plant is very large in relation to the system, say 5000 MW. From probability mathematics, see Reference 3-13, the additional load carrying capability that must be added to the system is the natural log of the ratio of the new to the old forced outage rate times the change in load that increases system reliability by 2.718, the base of the natural logarithms.

$$\text{Reserve Increase} = \left(\begin{array}{l}\text{Load change for}\\ \text{2.718 risk increase}\end{array}\right) \left(\ln \frac{\text{New Rate}}{\text{Old Rate}}\right)$$

Assuming the total four unit plant forced outage rate is 0.0012 and 100 miles double circuit outage probability is 0.0001, then the additional reserve required on a system where 1000 MW changes the risk 2.718 times, typical of a 80,000 MW system:

$$\begin{aligned}\text{Reserve Increase} &= (1000) \quad \left(\ln \frac{0.0013}{0.0012}\right)\\ &= (1000) \quad (\ln \quad 1.0832)\\ &= (1000) \quad (0.08)\\ &= 80 \text{ MW}\end{aligned}$$

Assuming a 90% availability for small units, 89 MW of small unit capacity is needed in the load area which at $115/kW equals $10,220,000 of additional investment. The increased cost of two 100-mile 765 kV lines is $52,100/mile.

This $52,100 of additional genration capacity for reserve due to each additional mile of transmission from a 52,000 MW plant results in $0.01/kw-mile. This is a maximum figure using pessimistic assumptions. The fact that the four units on one bus in a park could be switched to other lines is not considered even though this is provided for in the switching arrangements. Since the $0.01/ kW-mile is below the accuracy of this study the cost of additional generation for transmission is assumed included in the transmission costs shown in Table 3-11.

3.4 FITTING AN ENERGY PARK INTO THE EXPANSION OF AN ELECTRIC POWER GRID

3.4.1 Overview

To investigate the benefits and consequences of developing energy parks in an existing power delivery network, an actual power pool was selected and modeled for conceptual purposes only. The following results are not intended to imply that the selected pool will or should develop in the manner illustrated, but only that it is possible to develop the pool in either the dispersed siting or park siting manner.

The electric power network in the State of New York was used as a basis for developing the approximate utility power pool model used in the following discussion. This pool was selected because sufficient data were available for this task. Based on the data on file with the Federal Power Commission in Washington, D.C., and on file with the Public Service Commission of New York State in Albany, a simplified network model of the system proposed for New York State in 1983 was prepared.

Once the 1983 model was available the total load was increased in 20 steps until two 26,000 MW parks and approximately 20% more capacity in dispersed-sited peaking capacity would be required to serve the load plus a 20% installed reserve capacity margin. The transmission network was then grown in 20 steps for each of three generation siting alternatives:

1. All generation placed at dispersed sites.
2. One fossil park site and one very remote nuclear site used.
3. One fossil park site and one very near nuclear site used.

The results of these studies were used to determine the amount of transmission required for dispersed siting, to determine the increased amount of transmission for energy park siting and to identify any special problems associated with the delivery of power from a concentrated source.

3.4.2 Generation Expansion

The generation expansion was designed to cover the growth of two parks to their targeted size selected at the

beginning of this study, i.e., a nuclear park with 20 units rated 1300 MW and a fossil park with eight units rated 885 MW, eight units rated 1075 MW and a final eight units rated 1320 MW making a total of 24 fossil units. In addition to these units, peaking and daily cycling capacity was also included to continue a reserve margin 20% above the annual peak load, typical of the reserves for New York State (See page 30 of Volume 2, reference 3-14).

The generation expansion used in these conceptual plans is listed in Table 3-5. The expansion begins with the addition of two units, an 885 Mw fossil (coal) fueled unit and a nuclear 1300 MW unit. In the first six years of the expansion the addition of two units adequately meets 20% reserve requirement indicated by the entries in the EXCESS CAPABILITY column. Beginning in year 7 additional capacity for peaking or daily cycling duty is introduced to maintain the 20% reserve margin. In year 11 two fossil units are added to meet the increasing load growth. Adding four fossil units in three years assumes that the manufacturing cycle at the energy park has shortened from one year to nine months. In the 20th year 20 nuclear and 24 fossil units have been added to meet a load growth rate of 4.74% per year.

With the generation expansion defined we now turn to the network model on which to site these units.

3.4.3 Network Model

To represent the locations of loads and generation within the sample power pool the 49 locations listed in Table 3-6 were selected with the loads and generation shown for the initial year. For example, Albany is located 293.5 miles East and 137.0 miles North of the selected origin, has a load of 621 MW, installed generating capacity of 580 MW and when economically dispatched so that pool generation output equals pool load; the net generation less load is -621 MW, indicating that no generation is operating at Albany. Three sites have been designated for energy parks NEAR 1 is located in the Western part of the state and will be used as a coal-fueled park site; NEAR 2 is located in the southeast corner near the major load area and FAR is located at north central site about 300 miles from the major load area. The total load in the initial year is 33,700 MW and the total installed generating capacity is 50,842 MW.

Connecting these 49 locations are 214 existing transmission circuits, including 14 765-kV lines, 68 345-kV lines, 27 345-kV cables, 24 230-kV lines and the remainder

Table 3-5 Generation Expansion Pattern for Park/Dispersed Site Comparison

YEAR (1)	LOAD MW (2)	REQUIRED GENERATION MW (3)	REQUIRED ADDITIONS MW (4)	NEW GENERATION FOSSIL MW (5)	NUCLEAR MW (6)	PEAKING MW (7)	EXCESS CAPACITY MW (8)
0	33 700	40 440	0	0	0	0	0
1	35 300	42 360	1920	885	1300	0	265
2	36 970	44 360	2000	885	1300	0	450
3	38 720	46 460	2100	885	1300	0	535
4	40 560	48 670	2210	885	1300	0	510
5	42 480	50 980	2310	885	1300	0	385
6	44 490	53 390	2410	885	1300	0	160
7	46 600	55 920	2530	885	1300	185	0
8	48 810	58 570	2650	885	1300	465	0
9	51 120	61 340	2770	1075	1300	395	0
10	53 550	64 260	2920	1075	1300	545	0
11	56 080	67 300	3040	(2)1075	1300	0	410
12	58 740	70 490	3190	1075	1300	405	0
13	61 530	73 840	3350	1075	1300	975	0
14	64 440	77 330	3490	(2)1075	1300	40	0
15	67 500	81 000	3670	1320	1300	1050	0
16	70 700	84 840	3840	1320	1300	1220	0
17	74 050	88 860	4020	(2)1320	1300	80	0
18	77 560	93 070	4210	1320	1300	1590	0
19	81 230	97 480	4410	1320	1300	1790	0
20	85 080	102 100	4620	(2)1320	1300	680	0
				26240	26000	9420	

1.0474 Growth Rate	Total Capacity Added	61660 MW
	Total Capacity In Parks	52240 MW

Table 3-6 Locations Used in Power Pool Model

LOCATION NUMBER	NAME	COORDINATES X	Y	LOAD	INSTALLED GENERATION	YEAR 0 NORMAL GEN-LOAD DISPATCH	PARK SITES
1	ALBANY	293.5	137.0	621.	580.	-621	
2	BARNWA	241.6	303.4	650.	834.	184	
3	BROOKW	106.3	183.3	692.	490.	-202	
4	BUCHAN	285.1	45.9	0.	2939.	2879	
5	CLAY	168.7	179.1	591.	0.	-591	
6	COOPER	246.8	72.1	244.	93.	-151	
7	DEWITT	174.0	167.4	460.	0.	-460	
8	DUNKIR	1.0	130.8	95.	676.	63	
9	DYSING	42.9	172.9	0.	0.	0	
10	EDIC	212.7	177.1	577.	0.	-577	
11	E.PARK	292.9	89.4	0.	0.	0	
12	FALCON	13.6	103.9	212.	0.	-212	
13	FRASER	231.6	111.5	0.	0.	0	
14	GARDEN	30.9	155.7	1044.	0.	-1044	
15	GILBOA	257.8	126.0	0.	2270.	2270	
16	GOETHA	272.0	1.0	4292.	908.	-3982	
17	GOWANU	282.5	4.5	0.	320.	0	
18	GREENI	129.4	143.2	274.	184.	-274	
19	HILLSI	136.7	101.1	673.	408.	-348	
20	HUDSON	283.5	7.9	0.	800.	800	
21	HUNTLE	24.6	165.3	613.	868.	-455	
22	HURLEY	277.7	92.1	422.	400.	-22	
23	JENNIS	204.9	115.6	370.	63.	-370	
24	LEEDS	287.7	113.5	0.	1900.	1900	
25	LEWIST	18.8	175.7	1477.	2600.	1123	
26	MEYER	90.1	132.2	267.	0.	-267	
27	MILLIK	144.6	140.5	403.	1070.	491	
28	MILLWO	294.0	37.6	1346.	0.	-1346	
29	N TROY	303.9	152.9	124.	0.	-124	
30	NCPARK	203.8	268.9	0.	0.	0	(FAR)
31	NEW SC	284.0	141.8	0.	0.	0	
32	NORTHP	317.6	22.4	5500.	7582.	-1062	(NEAR 2)
33	OAKDAL	177.6	108.7	858.	131.	-858	
34	OSWEGO	150.4	196.4	190.	8925.	7775	
35	PLATTS	308.7	286.1	180.	42.	-138	
36	PLEASA	291.9	78.3	642.	12.	-642	
37	RAMAPO	274.6	35.5	822.	3778.	2577	
38	RAVENS	284.5	11.4	487.	8116.	136	
39	ROCHES	89.6	168.8	540.	0.	-540	
40	ROCK T	266.7	51.4	578.	0.	-578	
41	ROSETO	281.4	61.8	536.	2340.	633	
42	ROTTER	282.5	152.2	518.	120.	-518	
43	RUSSEL	92.7	186.0	1308.	548.	-1199	
44	SOMERS	41.4	186.0	0.	1200.	1200	
45	SPIERS	295.6	181.2	394.	645.	251	
46	SPRAIN	292.9	22.4	5475.	0.	-5475	
47	STOLL	40.8	150.8	0.	0.	0	
48	TAYLOR	213.3	231.6	226.	0.	-226	
49	W.PARK	93.8	144.6	0.	0.	0	(NEAR 1)
		TOTALS		33700.	50842.	0	

in 138 kV and 115 kV lines. Each circuit is represented by its capacity and length between terminals. For example, a 230 kV overhead line between Albany and N. Troy is modeled by 317 MW capacity 19 miles in length. Between these same terminals is a 115 kV line with 79 MW capacity.

The network expansion developed in this study used a capacitated linear network model, reference 3-15 which has been applied successfully in conceptual planning studies for six power pools. This model uses only distance and capacity to represent circuits. After the network is planned, electrical network models confirmed the adequacy of the design and provided the information needed for more detailed analysis.

The network model has already established in it circuits at the 765 kV and 345 kV levels plus a significant 345 kV cable network in the large load area. These established voltage levels are used in the 20-year expansion.

3.4.4 Generation Siting

Three generation siting patterns were used with the generating units in Table 3-5 and the 49 locations listed in Table 3-6 as indicated in Table 3-7. The dispersed sites, Case 1, were selected to closely parallel those listed in reference 3-14. In Case 2 the coal-fired units are sited at NEAR 1, (W. Park) and the nuclear units are sited at FAR, (NCPARK). The peaking units all remain sited at NORTHP near the major load center. With the dispersed siting arrangement each megawatt generated traveled an average distance of 23 miles to reach its demand location. Moving 52,240 MW of generation into two parks, Case 2, increased the average distance for these megawatts by 126 miles. To study the effect of parks at nearby sites Case 3 was prepared with the nuclear park relocated at NEAR 2 (NORTHP), which is very close to the major load center, and increases the average distance by only 10 miles over the dispersed case.

3.4.5 Transmission Expansion Procedure

To plan the circuits connecting the generating units in Table 3-7 to the loads a computer program especially developed for conceptual planning was used. This program, developed from 21 power pool planning applications beginning in 1963, implements the horizon-year approach illustrated in Figure 3-4. The 20th year was studied first to identify

Table 3-7 Generation Sites for Dispersed and Park Studies

Year	Additions	Case 1 Dispersed Sites	Case 2 Park Sites	Case 3 Park Sites
1	1300 MW NUCLEAR	LEEDS	NCPARK	NORTHP
	885 MW COAL	NORTHP	W.PARK	W.PARK
2	885 MW COAL	BUCHAN	W.PARK	W.PARK
	1300 MW NUCLEAR	BUCHAN	NCPARK	NORTHP
3	1300 MW NUCLEAR	W.PARK	NCPARK	NORTHP
	885 MW COAL	SOMERS	W.PARK	W.PARK
4	1300 MW NUCLEAR	SOMERS	NCPARK	NORTHP
	885 MW COAL	NORTHP	W.PARK	W.PARK
5	1300 MW NUCLEAR	SOMERS	NCPARK	NORTHP
	885 MW COAL	NORTHP	W.PARK	W.PARK
6	1300 MW NUCLEAR	W.PARK	NCPARK	NORTHP
	885 MW COAL	NORTHP	W.PARK	W.PARK
7	1300 MW NUCLEAR	SOMERS	NCPARK	NORTHP
	885 MW COAL	NORTHP	W.PARK	W.PARK
	185 MW PEAKING	NORTHP	NORTHP	NORTHP
8	1300 MW NUCLEAR	W.PARK	NCPARK	NORTHP
	885 MW COAL	NORTHP	W.PARK	W.PARK
	465 MW PEAKING	NORTHP	NORTHP	NORTHP
9	1300 MW NUCLEAR	LEEDS	NCPARK	NORTHP
	1075 MW COAL	NORTHP	W.PARK	W.PARK
	395 MW PEAKING	NORTHP	NORTHP	NORTHP
10	1300 MW NUCLEAR	ROCK T	NCPARK	NORTHP
	1075 MW COAL	BUCHAN	W.PARK	W.PARK
	545 MW PEAKING	NORTHP	NORTHP	NORTHP
11	1300 MW NUCLEAR	ROCK T	NCPARK	NORTHP
	1075 MW COAL	BUCHAN	W.PARK	W.PARK
	1075 MW COAL	DUNKIR	W.PARK	W.PARK
12	405 MW PEAKING	NORTHP	NORTHP	NORTHP
	1300 MW NUCLEAR	NORTHP	NCPARK	NORHTP
	1075 MW COAL	DUNKIR	W.PARK	W.PARK
13	975 MW PEAKING	NORTHP	NORTHP	NORTHP
	1300 MW NUCLEAR	SPIERS	NCPARK	NORTHP
	1075 MW COAL	BROOKW	W.PARK	W.PARK
14	1075 MW COAL	E.PARK	W.PARK	W.PARK
	1300 MW NUCLEAR	NORTHP	NCPARK	NORTHP
	40 MW PEAKING	NORTHP	NORTHP	NORTHP
	1075 MW COAL	BROOKW	W.PARK	W.PARK
15	1320 MW COAL	E.PARK	W.PARK	W.PARK
	1300 MW NUCLEAR	NORTHP	NCPARK	NORTHP
	1050 MW PEAKING	NORTHP	NORTHP	NORTHP
16	1300 MW NUCLEAR	NCPARK	NCPARK	NORTHP
	1220 MW PEAKING	NORTHP	NORTHP	NORTHP
	1320 MW COAL	OSWEGO	W.PARK	W.PARK.
17	1300 MW NUCLEAR	NORTHP	NCPARK	NORTHP
	80 MW PEAKING	NORTHP	NORTHP	NORTHP
	1320 MW COAL	SPIERS	W.PARK	W.PARK
	1320 MW COAL	OSWEGO	W.PARK	W.PARK
18	1590 MW PEAKING	NORTHP	NORTHP	NORTHP
	1300 MW NUCLEAR	NORTHP	NCPARK	NORTHP
	1320 MW COAL	OSWEGO	W.PARK	W.PARK
19	1320 MW COAL	E.PARK	W.PARK	W.PARK
	1300 MW NUCLEAR	NCPARK	NCPARK	NORTHP
	1790 MW PEAKING	NORTHP	NORTHP	NORTHP
20	1320 MW COAL	E.PARK	W.PARK	W.PARK
	1320 MW COAL	SOMERS	W.PARK	W.PARK
	1300 MW NUCLEAR	NORTHP	NCPARK	NORTHP
	680 MW PEAKING	NORTHP	NORTHP	NORTHP

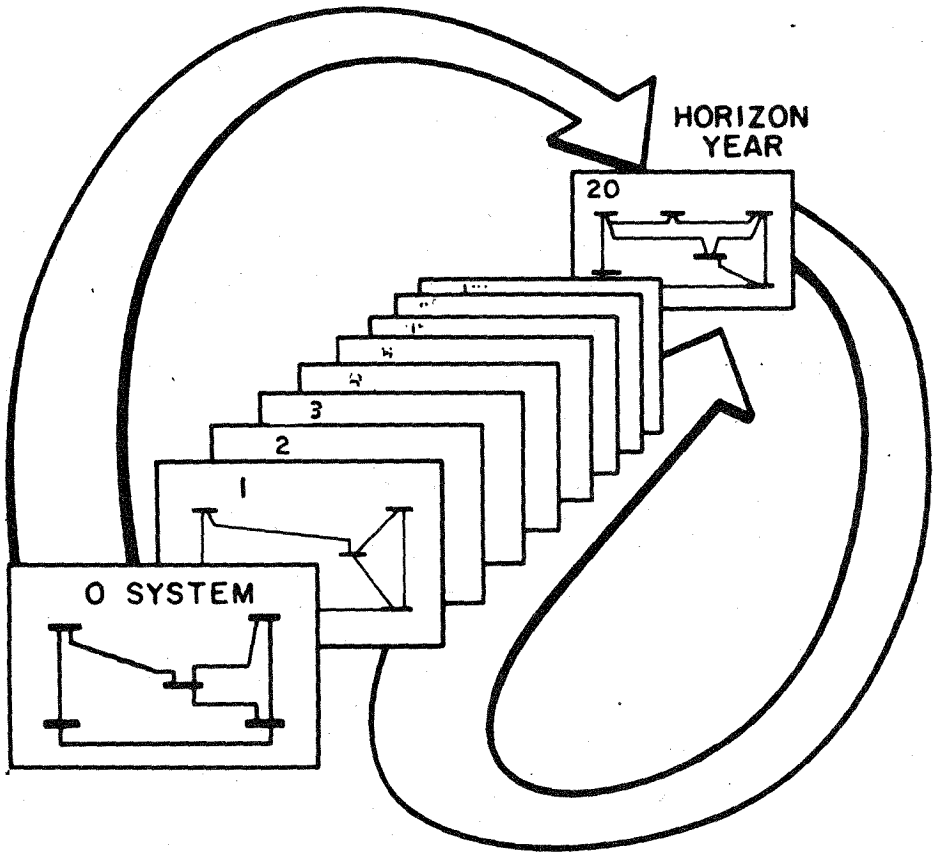

Figure 3-4 Horizon-Year Approach to Transmission Network Expansion Planning.

where major transmission circuit additions at 765 kV would be needed. Then additional 345 kV circuits were included to further relieve the capacity shortages. The resulting horizon-year plan becomes a goal for planning the year-by-year expansion of the network. When shortages are encountered requiring a new circuit addition, circuits from the horizon-year goal are considered first. Circuits not in the horizon-year system are added only occasionally. In this manner a transmission expansion with major high voltage circuit additions is planned resulting in a near minimum cost solution. Further information on this program is contained in Reference 3-15.

Before proceeding to examine the transmission expansion plans, it is interesting to review the magnitude of the planning assignment carried out by the computer. Each of twenty years was examined by studying several dispatches and all single-circuit outages, resulting in nearly 1200 different network studies to plan 20 years. The study included peak load dispatches for each year, outage of the largest two generating units on peak in five different areas of the pool each time new generation was added, double transmission circuit outages at each generating plant and all single circuit outages each year. These tests were discussed in 3.3.3.3, PLANNING CRITERIA. The result is a network that will withstand most electrical network tests and has been found to be sufficiently accurate for conceptual planning.

3.4.6 Expansion Results

By studying normal dispatches, low load dispatches, generation outages and transmission outages on a yearly basis, transmission plans were developed for the dispersed generation siting pattern in Table 3-7 and for the two alternate energy park siting arrangements. Figure 3-5 illustrates the cost total transmission cost behavior for the dispersed sites and the remote energy park study, Case 2 with the NEAR 1 and FAR energy park sites used. It is interesting to note how the establishment of the first and second units at the park sites cause significant increases in transmission costs, as was expected, but by the third unit additions in each park, recall one unit is being added each year, the park-alternative cost increases only slightly while the dispersed site alternative experiences a sharp increase. Because these two curves trend toward a straight line through the final point a constant transmission dollars per kW of generating capacity will be used in the economic analysis section, Section 9. For a particular energy park situation a more detailed analysis of the first and second year transmission costs with and without the park appears needed to improve the accuracy of the constant $/kW assumption.

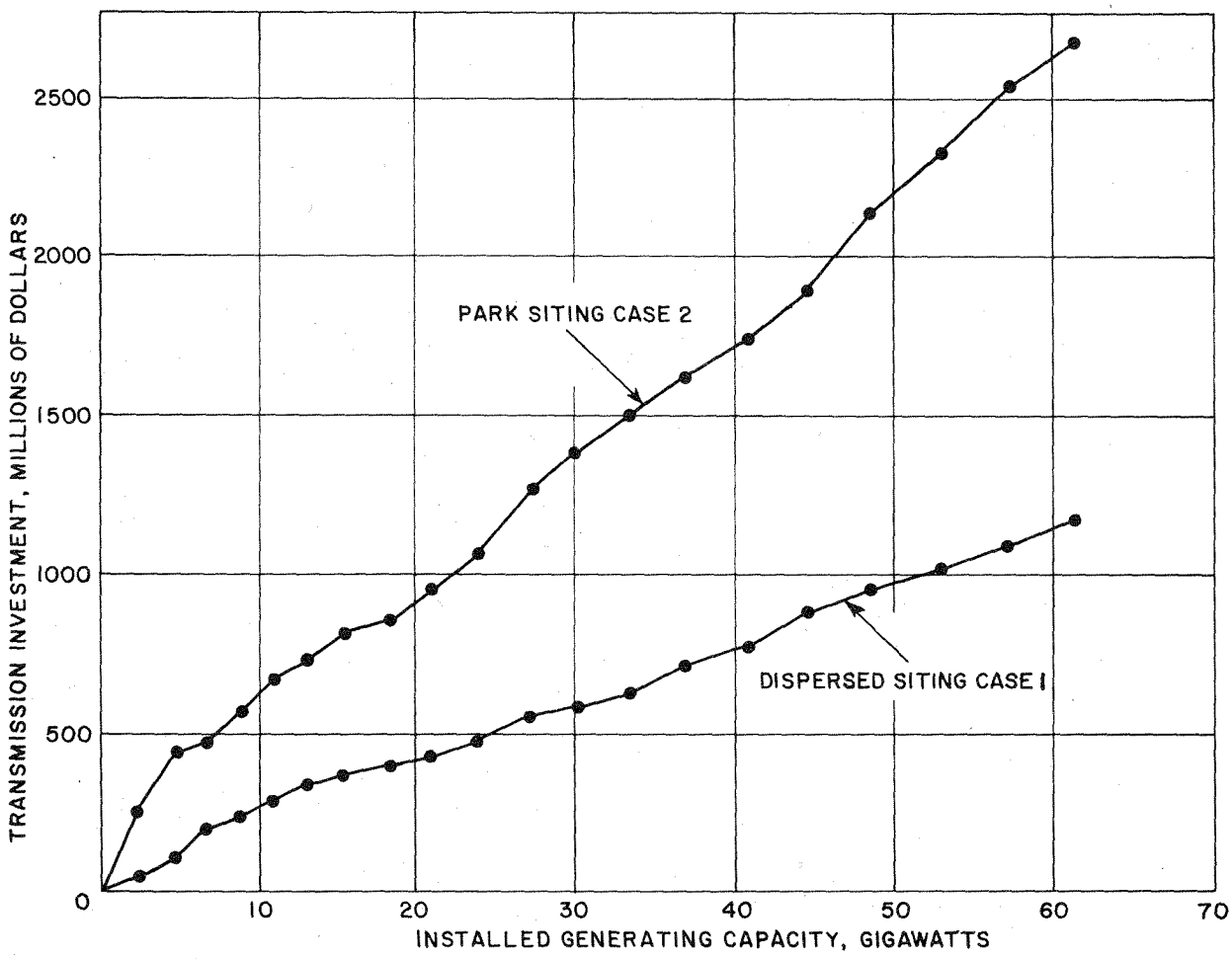

Figure 3-5 Transmission Investment for Remote Parks Versus Dispersed Sites.

Comparing the highest voltage, networks mapped in Figure 3-6, 3-7 and 3-8 indicates that a 765 kV network will be needed no matter which of the three siting patterns are followed. The use of a remote park site, Figure 3-7, greatly increases the amount of transmission from the northern site down across the state to the southern load center, while using a second "near" site, Figure 38, reduces the network transmission significantly.

The number of circuits, miles and costs for each case are tabulated in Table 3-8. For example, Case 1 with all dispersed siting, has 61.660 gigawatts of new generation installed producing 1417 gigawatt-miles of capacity shortages when the 20th year normal dispatch is applied to the existing zero-year network. This means that after using all existing transmission capacity the power deliveries from generators to demand produce overloads which when multiplied by the length of the routes overloaded totaled 1,417,000 megawatt-miles. Dividing by the amount of generation installed, 61,660 megawatts, provides the average miles traveled by each new generation megawatt to reach and satisfy a demand, 23 miles in Case 1. This calculation procedure for average distance is used in all analyses for this report.

Table 3-8, after summarizing the generation and mileage, lists the number of individual circuits added during the 20-year expansion to provide a network with sufficient capacity to deliver power during the normal and emergency conditions mentioned in Section 3.4.5, Transmission Expansion Procedure. The dispersed siting case required 657 miles of 345 kV overhead construction in 24 individual circuits, which require a $130 million dollar investment using the January 1974 costs given in Table 3-1 of Section 3.3.4.2, Typical Study Values, with no inflation. Inflation effects and present worth values will be computed and presented in Section 9, covering the economic analysis of dispersed and park arrangements. The costs in Table 3-8 were used to gain a general understanding of how transmission costs vary with generation concentration and distance to demand centers.

The transformer costs in Table 3-8 were computed using $4500 per megawatt of installed generation, the sum of the generation step-up and step-down costs shown in Table 3-1. This value assumes that the transformer costs are affected only by the amount of power to be delivered and not by the distance or voltage level used. The 345 kV cable network in the major load area required an additional 31 circuits totaling 293 miles of high pressure oil-filled cable, discussed and costed in Section 3.3.4.4, Underground Cable.

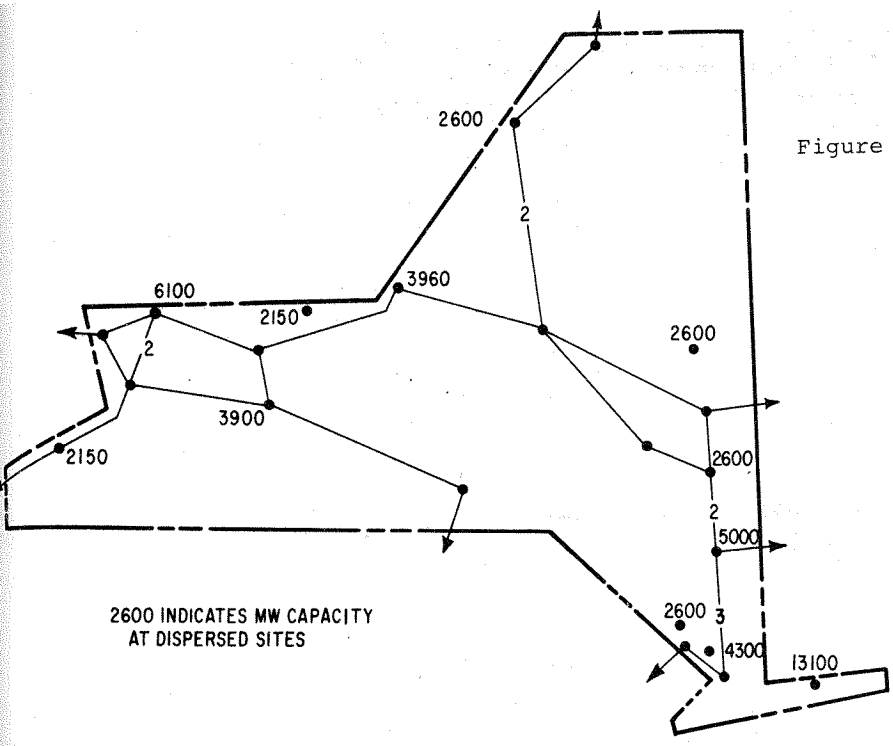

Figure 3-6 Case 1, Dispersed Sites, 765-kV Network.

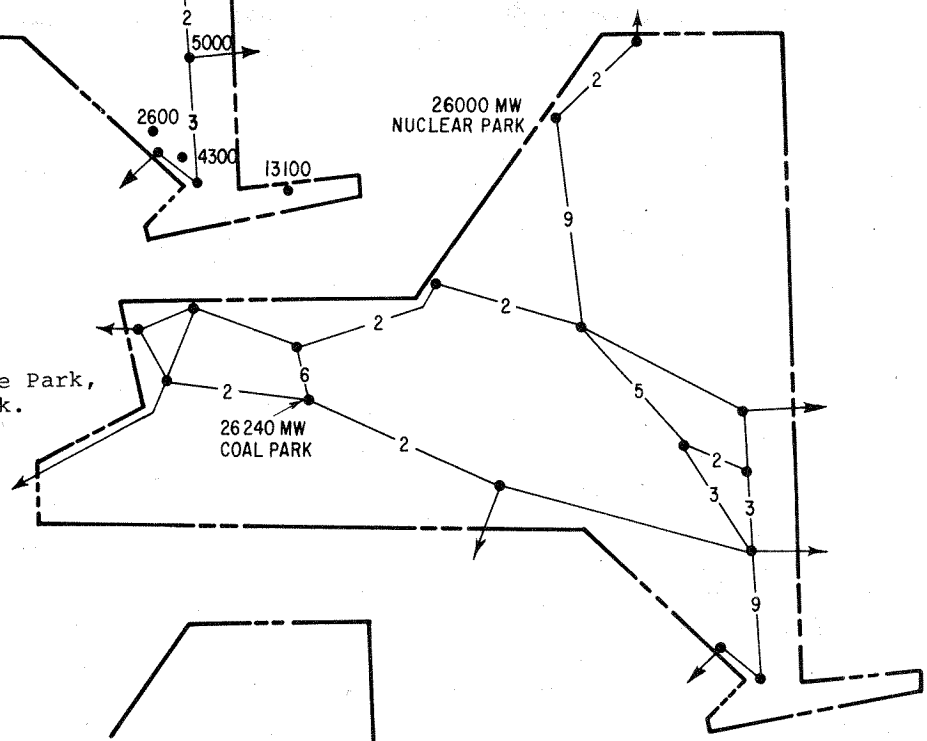

Figure 3-7 Case 2, Remote Park, 765-kV Network.

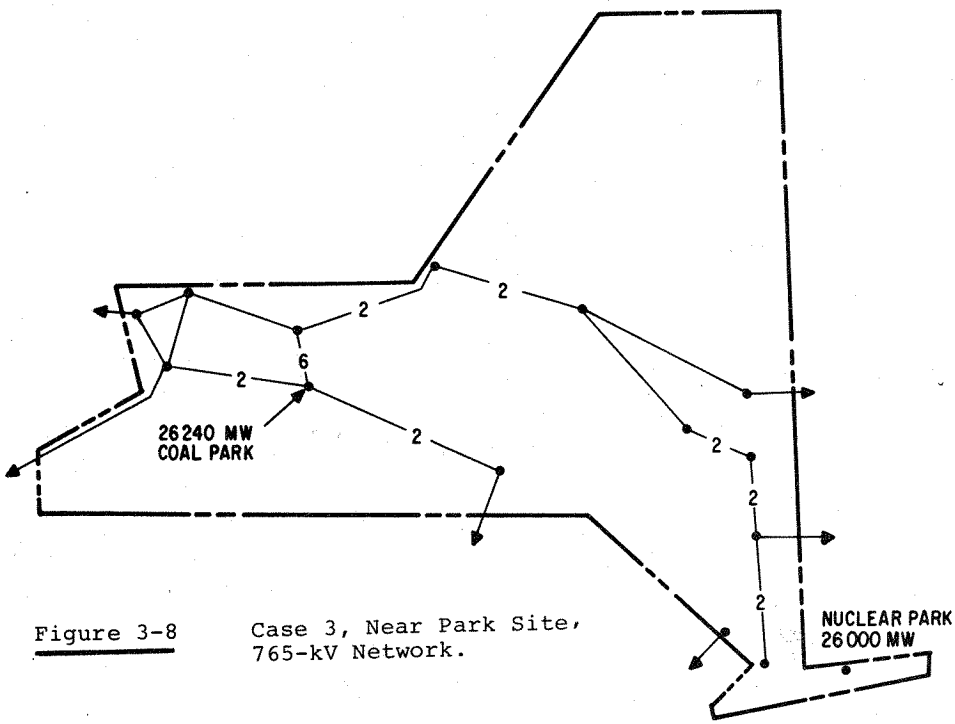

Figure 3-8 Case 3, Near Park Site, 765-kV Network.

Table 3-8 Transmission Investment as Affected by Siting in Example Power Pool

ITEM (1)	INSTALLED GW (2)	PARK GW (3)	GW-MILES (4)	MILES (5)	CIRCUITS ADDED KV (6)	MILES (7)	NO. (8)	INVESTMENT $M (9)	ACRES (10)
						Transformers		$ 277.	0
1. All Dispersed Siting	61.660	0	1417	23	345	657	24	130.	11826
					345C*	293	31	509.	0
					765	555	14	253.	13875
								$1169.	25701
						Transformers		$ 277.	0
2. Two Parks NEAR1 FAR	61.660	52.240	7990	130	345	790	25	144.	14220
					345C	737	54	1205.	0
					765	2604	52	1067.	65100
								$2693	79320
						Transformers		$ 277.	0
3. Two Parks NEAR1 NEAR2	61.660	52.240	1809	29	345	535	18	101.	9830
					345C	1336	70	2094.	0
					765	658	13	268.	16450
								$2740.	26080
						Transformers		$ 277.	0
4. All Dispersed Siting	61.660	0	1417	23	345	862	46	217.	15516
					765	555	14	253.	13875
								$ 747.	29391
						Transformers		$ 277.	0
5. Two Parks NEAR1 FAR	61.660	52.240	7990	130	345	1306	63	307.	23508
					765	2604	52	1067.	65100
								$1651.	88608
						Transformers		$ 277.	0
6. Two Parks NEAR1 NEAR2	61.660	52.240	1809	29	345	1470	67	333.	26460
					765	658	13	268.	16450
								$ 878.	42910

* 345C is 345 Cable

The 765 kV network was increased by 14 circuits with a total length of 555 miles, whose costs are presented in Table 3-1. The total expansion required $1,169,000,000 investment using January 1974 costs, and 25,701 acres of land. This includes only the bulk power transmission network. It is assumed that the subtransmission and distribution systems will be common to all generation siting arrangements.

With a near and remote energy park used, Case 2 in Table 3-8, investment more than doubles from $1169 million to $2693 million, and the land use triples to 79,320 acres. These large increases are caused by relocating 52,240 MW of generation so that in the 20th year the 61,660 MW traveled an average of 130 miles in reaching a demand point, as compared to 23 miles for the dispersed siting arrangement. If the remote generation site were to be seriously considered then high voltage direct current, HVDC, transmission would be a very competitive option and its use is discussed in Section 3.4.7.

The results of Cases 1 and 2 indicated that transmission investment was increased from $19.0 per kilowatt of installed generation ($1169 million/61.66 million kW) to $43.8 per kW (2698/61.66). This significant increase appeared to be due to the use of the remote park site. Case 3 was computed with all of the "FAR" park site units moved to within 40 miles of load equal to its total output, site "NEAR 2". The results are surprising. Case 3 costs go up, not down, from $2698 million for the remote site to $2740 million, but the land use is reduced to nearly that of the dispersed sites. Cable costs are completely masking the overhead transmission savings. Cables play a significant role in siting around large metropolitan areas and require further investigation beyond the scope of this study. Only existing 345 kV cable technology was employed in this study as discussed previously and dc and cryogenic cables would likely play major roles if an energy park were sited in the metropolitan area.

The significant cable costs in Cases 1, 2, and 3 do not qualify them as typical of the transmission cost behavior as generating unit sites are moved from dispersed to near or far park sites. To obtain more general results, Cases 1A, 2A, and 3A, Table 3-8, were computed using 345 kV overhead costs for the capacity previously installed as cable. The dispersed sites, Case 1A, require $747 million investment, the remote siting case more than doubles to $1681 million, while the near park siting cost is only 18% above the dispersed site cost, $878 million.

3.4.7 Incremental Transmission Costs of Parks Versus Dispersed Sites

The example power pool study presented in the previous section illustrates how the transmission costs vary as generating unit sites are changed from dispersed to parks. Table 3-9 summarizes the incremental dollar and land use results of the six cases. In Case 1 with 61,660 MW of new generation capacity averaging 23 miles from point of generation to load, $1169 million in transmission was required, or $19 per kW of generation and 25,701 acres of land or 0.417 acres per megawatt of generation. In Case 2, when 52,240 MW of this generating capacity was re-sited, half at site "NEAR 1" and half at "FAR", these 52,240 megawatts had to travel an additional 126 miles on the average, requiring $1523 million more in transmission investment, $29.2/kW, and 53,619 more acres, 1.026 acres/MW. Re-siting the "FAR" units at site "NEAR 2" reduced the average additional distance from 126 to 10 miles, but increased the transmission investment from $1523 to $1571. As discussed in the previous Section, 3.4.6, the cable cost increase overwhelmed the savings in overhead transmission.

Cases 1A, 2A, and 3A result when the cable in the previous three cases are costed as overhead circuits. The dispersed siting transmission costs drop to $12.1/kW. Moving the units to park sites, requiring an additional 126 miles for power delivery, adds $17.3/kW of re-sited capacity, while using park sites on the average of 10 miles from the loads increases the costs only $2.5/kW. The land usage increases by 1.133 acres per MW when the 52,240 MW are moved an average of 126 miles further from the loads, while the increase is only 0.259 acres per MW when a 10 mile increase is made. The results from Cases 2A and 3A are comparable with the incremental costs developed in the USA study discussed in Section 3.5. The dispersed site cost of $12/kW assumed for all further work is based on the results in Case 1A, Table 3-9.

3.4.8 Real and Reactive Power Losses

Electrical network flow calculations were performed for the horizon-year design using dispersed generation sites, Case 2. Table 3-10 summarizes the results. All loads were assumed corrected to unity power factor (no reactive power required) and the voltage profile was held at 5% above nominal voltage at the generating plants and supported at 5% below nominal voltage at the load buses. The real power losses go from 1.3% to 3.5% of the total generation as the

Table 3-9 Incremental Transmission Investments Per Installed Generation Capacity in Example Power Pool

(1)	INSTALLED GENERATION MW (2)	INCREMENTAL TRANSMISSION MILES (3)	$M (4)	ACRES (5)	INCREMENTAL $/KW (6)	ACRES/MW (7)
1. All Dispersed Siting	61660	23	$1169	25701	19.0	0.417
2. Two Parks NEAR1 FAR	52240	126	1523	53619	29.2	1.026
3. Two Parks NEAR1 NEAR2	52240	10	1571	379	30.1	0.007
4. All Dispersed Siting (No cable)	61660	23	747	29391	12.1	0.477
5. Two Parks NEAR1 FAR	52240	126	904	59217	17.3	1.133
6. Two Parks NEAR1 NEAR2	52240	10	131	13519	2.5	0.259

Caution: These costs are based on Table 3-1, 1974 costs, which in April, 1975, appear 1/2 to 1/3 of present costs.

Table 3-10 Electrical Energy Losses at Peak Load with Two Completed Energy Parks

CASE	LOAD		GENERATION		LOSSES		PERCENTAGE*	
(1)	MW (2)	MVAR (3)	MW (4)	MVAR (5)	MW (6)	MVAR (7)	REAL (8)	REACTIVE (9)
1. Dispersed Sites with cable	85,091	0	86,200	-4497	1108	-4497	1.3%	-5.8%
2. Energy Parks at Near 1 and Far sites with cable.	85,091	0	88,143	13,375	3052	13,375	3.5	15.2

* Losses in percent of generation.

sites are moved an additional 126 miles from the loads. The increased losses due to remote siting are included in the economic analysis. However, as the loads vary throughout a year the average losses will be lower than the peak load condition. A study of the network flows and losses at several of these load levels would be necessary to completely determine the increase in annual energy losses due to the change in siting. A study of this type is beyond the scope of this work. It was estimated that the total annual energy losses would increase 1% of the energy generated per 100 miles of average distance from generation to load.

The reactive power losses in Table 3-10 change from 4497 MVAR capacitive to 13,375 MVA inductive, a total change of 17,872 MVAR. In the dispersed case the cable network is supplying capacitive power which must be matched by inductive loads such as installed reactors. In the energy parks case the heavy loadings on the increased amount 765 kV overhead lines creates excess inductive power which must be matched by capacitive power at the receiving terminals. The terminal costs in Table 3-1 include the necessary reactive compensation for the dispersed case (50 mile terminal) and capacitive compensation for the park case (250 mile terminal).

The reactive power supply problem which deserves careful study as a specific energy park proposal is evaluated, is not a technical barrier to energy parks.

3.4.9 HVDC Transmission Application

The use of HVDC to connect the output of two generation complexes at a remote energy park, is shown in Figure 3-9. Two overhead dc lines are connected through high-speed switches or dc circuit breakers to provide firm transmission in the event of a transmission tower loss[3-17]. Each ac bus is connected to a bipolar converter station, and the poles are connected so that a pole from each station is connected to each line. This is important in establishing the performance during severe contingencies. Under a permanent line loss, methods have been developed to clear the fault, reclose to test whether it was a permanent or transient fault, and if it is permanent to connect all terminal equipment on to the healthy line. It may be noted that only the sending dc terminals are shown and that a similar substation arrangement would be at the receiving end of the line. Such a switching sequence can be completed in one second or less. The machines would accelerate during the fault by approximately 5% for the connection as shown if the unaffected poles continue to transmit their rated load. However, short-time overload of 60% would reduce this overspeed to about 3% and higher short-time (1 second) overload could further reduce this overspeed.

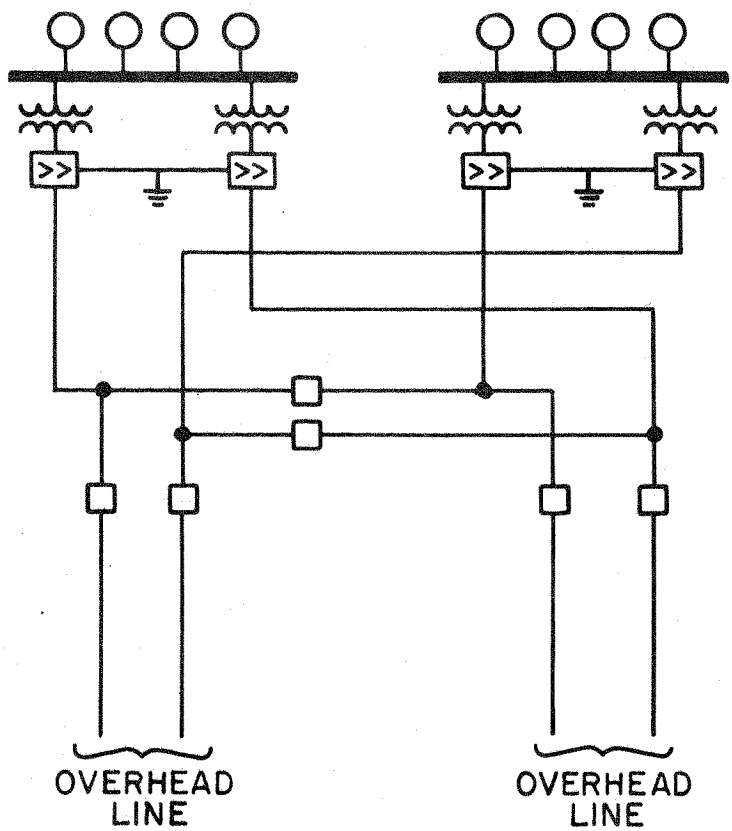

Figure 3-9 Illustrative HVDC Terminal and Line Arrangement at Two Buses of an Energy Park

The thermal rating of these overhead lines would generally match the overload condition since the economics of conductor size selection generally provide this capability. During the overload condition, the total line loss would be doubled but all generation would be connected.

Additional generation complexes could be connected to bipolar dc lines in a similar fashion to permit transmission of any desired proportion of the energy park output over dc lines. In addition, by tying other dc poles from the ac buses of other generation through appropriate switching, it would be possible to redistribute the line loadings after a first permanent line outage to mitigate the effects of a second contingency.

Using dc for power delivery from an energy park can provide a reliable transmission system with less total lines than required for ac alternatives. These savings will depend on the specific context of the application requiring studies beyond the scope of this preliminary investigation.

3.4.10 Conclusions

The transmission expansion for a power pool will be significantly affected by the distance from generation to demand, and only slightly affected by clustering the units at a park as compared to dispersing them at the same distance to the loads.

The three 20-year expansion examples illustrate that network growth can proceed in an orderly manner using either dispersed or park sites.

3.5 TRANSMISSION COSTS FOR PARKS VERSUS DISPERSED SITES COMPARISON

3.5.1 Overview

The economic comparison of parks and dispersed sites in Section 9 includes the effects on power delivery costs. The data used in this comparison are presented in Table 3-11 and their development will be traced in the following sections.

The investment cost data in Table 3-11 includes the costs of bringing transmission circuits and terminals into service as generating capacity increases. For example each kilowatt of generation installed an average of 25 miles from its demand requires $14 of transmission investment, a US average at January, 1975 costs. The $14 per generation kilowatt at 25 miles is a bulk power delivery network value only and does not include investments in circuits used for subtransmission and distribution.

Park siting on the average of 75 miles from the demand increases the investment cost in Table 3-11 to $21 per KW of installed generation. An additional 100 miles of distance increases the costs $14 so that parks 175 miles from the load require $35 of transmission per KW of generation.

The payments for these transmission investment are assumed for study purposes to be 30% three years prior to the inservice date of the power generator, another 30% two-years before service and the final 40% invested the year before the inservice date. Since labor and material may have different inflation rates, the total investment was split into two equal parts, a reasonable assumption in 1975.

Land requirements for transmission routes are shown as acres per megawatt of new generating capacity in Table 3-11. Dispersed sites averaging 25 miles from the load require 0.8 acres per 1000 KW of installed generation, as a U.S. average. As units are sited further from the load the land requirements increase at the rate of 1.2 acres per megawatt per 100 miles.

The depreciation charge for transmission was included so that cash flow values could be computed from values that include depreciation. Forty-years is a typical industry estimate for book depreciation.

The operating and maintenance costs for transmission include two items, energy losses and an investment dependent O&M charge. The losses in delivering power from generation

Table 3-11 Transmission Data for Economic Analysis

The following data are used in the economic analysis of dispersed versus park siting of generating equipment.

I. Investment Cost Data

A. Transmission investment in January 1975 dollars per kilowatt of generation, $/KW. Land not included.

$/KW	
14.0	Dispersed siting (25 miles)
21.0	Park siting near loads (75 miles)
35.0	Intermediate siting (175 miles)
49.0	Far siting (275 miles)

B. Payment schedule during construction, per unit of total (assumed for study purposes):

0.30	Three years before in-service data
0.30	Two years before in-service data
0.40	One year before in-service data

C. Division of material and labor costs (assumed for study purposes):

0.50	Labor per unit of total cost
0.50	Material (not including land) per unit of total

D. Land requirements, acres per megawatt of generating capacity:

Acre/MW	
0.8	Dispersed sites
1.4	Parks at near sites
2.6	Parks at intermediate sites
3.8	Parks at far sites

E. Depreciation charge for transmission:

2.5% representing a 40 year life

II. Operating and Maintenance Costs

A. Losses of energy per energy generated, (MW-hr. losses)/(MW-hr generation):

0.080	Dispersed sites
0.085	Parks at near sites
0.095	Parks at intermediate sites
0.105	Parks at far sites.

B. Operating and maintenance charges (O&M$)/(Transmission Investment $):

0.02

to the customer's load are currently running about 8% as indicated by reports to the FPC. That is, the total electrical energy generated and the energy delivered at the customer's meter differ by 8% of the total generated. Of this amount approximately 3% is energy dissipated on the bulk power transmission system. These bulk power losses tend to increase an additional 1% of total generation for every 100 miles increase in distance between generation and load. The investment dependent operating and maintenance charge of 2% represents expenditures for the operating and maintenance personnel and materials, based on industry values from 1.5 to 2.5%.

These values in Table 3-11 were used in comparing dispersed versus park sites and were developed from general industry data and a model of 59 parks and 340 load locations in the U.S.A. as described in the following section.

3.5.2 Investment Cost Study

Developing average transmission investment costs for energy parks was accomplished by mapping out the transmission circuits necessary to move energy from 59 representative park sites in the continental United States. These park sites were assigned to the six regions used in the 1970 National Power Survey Figure 3-10. Only one year was studied, the year in which the load growth equalled the combined output of 59 parks, 1,134,000 megawatts. This load was distributed among 340 locations guided by the load forecasts in the 1970 National Power Survey. No existing load, generation or transmission data were included in order to contain the study to a manageable dimension. This very conceptual model requires the assumption that existing generation and transmission will serve the existing component of the future load while the load growth will be totally served by new generation in parks and connected to the major load centers by new transmission circuits. This assumption tends to overstate the amount of transmission required for remote park sites. However, its encouraging that the $/KW values determined from this U.S.A. model are consistant with the $/KW values derived in the more detailed power pool example of Section 3.4.6.

Table 3-12 summarizes the transmission expansion results for the six FPC regions and for nine individual parks selected to represent a wider variation in average distance from generation to load center. The Northeast region included ten 26 gigawatt parks which were sited so that an

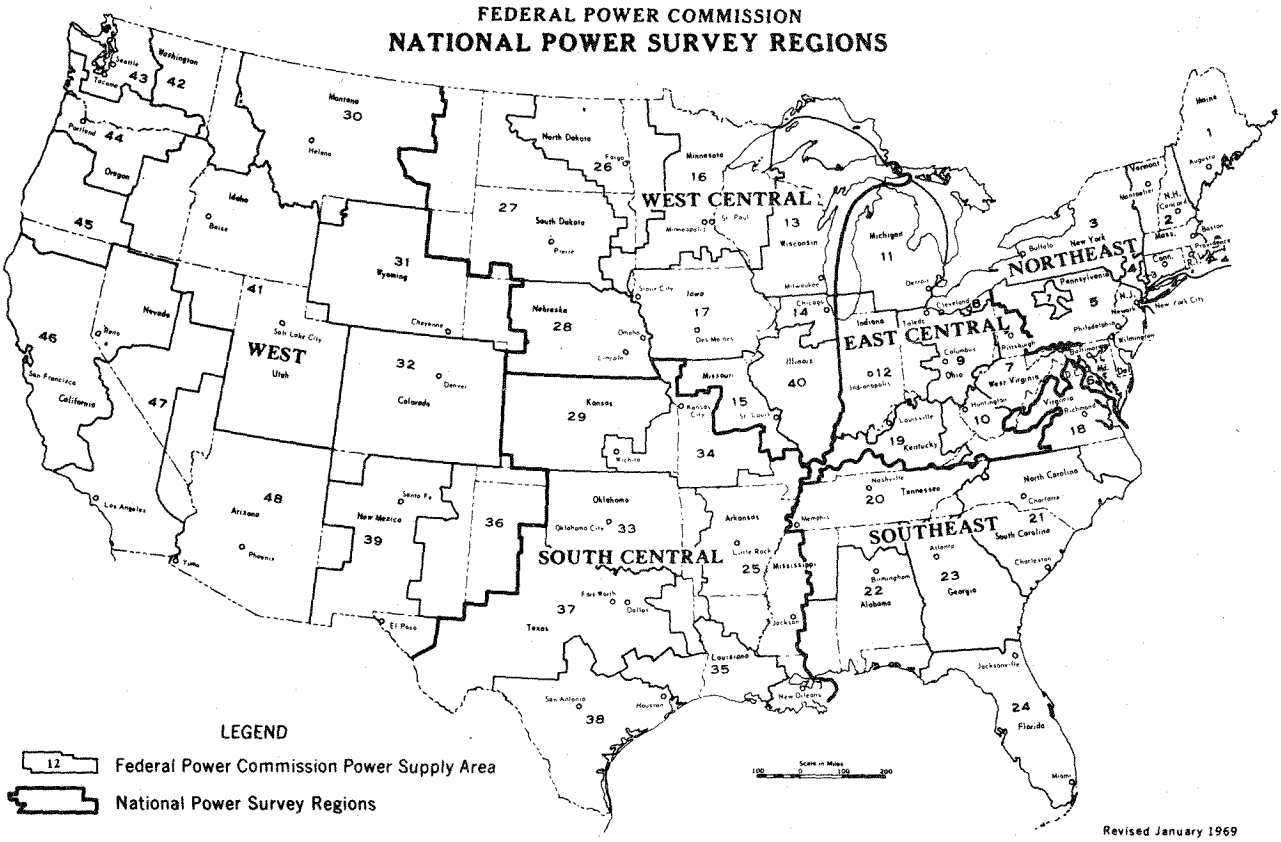

Figure 3-10 Six 1970 National Power Survey Regions.

TABLE 3-12

DATA FOR TRANSMISSION COST AND LAND USE ANALYSIS

LOCATION (1)	PARK-GW (2)	GW-MILES (3)	MILES (4)	CIRCUITS ADDED KV (5)	MILES (6)	NO. (7)	INCREMENTAL (8)	$ / KW* (9)	(10)	ACRES/MW (11)
Northeast	260	15270	59	500 765	4251 3762	102 83	7.6	6.6	4.2	0.7
East Central	234	22160	95	765	8921	168	13.3	12.2	8.2	1.0
Southeast	312	34300	110	500	25284	324	12.5	9.5	5.1	1.7
Southeast	312	34300	110	765	14519	205	15.2	13.8	9.0	1.2
West Central	208	24270	117	765	10030	112	14.9	13.4	8.4	1.2
South Central	234	29830	128	765	15958	190	21.2	19.1	12.1	1.7
West	312	44170	142	500 765	8364 15074	107 121	18.4	15.9	9.4	1.8
Park 5	26	2797	108	765	1419	19	17.4	15.7	10.1	1.4
Park 19	26	1048	40	765	453	14	7.1	6.6	4.8	0.5
Park 32	26	3655	141	500	2898	37	17.1	12.9	6.9	2.4
Park 32	26	3655	141	765	1751	24	21.5	19.5	12.5	1.7
Park 39	26	1452	56	765	703	12	9.0	8.2	5.4	0.7
Park 50	26	3270	126	765	2393	27	28.4	25.6	16.0	2.3
Park 56	26	10545	405	765	5553	35	61.3	54.9	32.7	5.4
Park 63	26	3547	136	500	1994	19	12.0	9.1	4.9	1.6
Park 66	26	4747	183	765	2129	16	23.9	21.5	13.0	2.1

* Column (8) computed using Eastern U.S. line costs.

Column (9) computed using Western U.S. line costs.

Column (10) computed using Central U.S. line costs.

average unit of power traveled 59 miles to reach the load. Two different maximum voltage levels are currently in use in this region and these were expanded in the study by adding 102 500-KV circuits with a total of 4251 circuit-miles and 83 765-KV circuits, 3762 circuit miles. Using the costs of Table 3-1 and dividing by the 260 GW of installed generation resulted in $7.6 of transmission investment per kilowatt of generation if this expansion were made using 1974 average costs for the Eastern U.S. If the same spatial relationships of load and generation were encountered in the Western U.S. the lower mile and terminal costs would reduce the cost to $6.6/KW. Using Central U.S. costs reduces the average still further to $4.2/KW. The average load requirement for the combined use of 500 KV and 765 KV is 0.7 acres per 1000 KW. Thus for the Northeast with 260 GW and using Eastern costs, $1,986 dollars (uninflated January, 1974) and 182 million acres are invested in transmission. Recall the dollar investment does not include land costs.

The East Central Region was studied with nine parks and only 765 KV, Table 3-12. The Southeast Region was studied with twelve parks and 500 KV and then again with only 765 KV to gauge the difference in costs, indicating that dollar requirements (without land) increase but land requirements decrease. The West Central Region study include eight parks and 765 KV, the South Central Region nine parks and 765 KV and the West twelve parks and a combination of 500 KV in California and 765 KV elsewhere.

The incremental values in Table 3-12 were combined with base dispersed site quantities of $12/KW and 0.5 acres/MW taken from Table 3-9, Case 1A, and then plotted in Figures 3-11 and 3-12. These figures, relating investment cost and land use to average power delivery distance, aided in selecting the $/KW and acre values shown in Table 3-11. Originally Table 3-11 was to show 1974 costs but near the end of the project it was necessary to increment these to January, 1975. A 20% increase was used based on preliminary data on the cost of transformers, steel, aluminum and labor. The resulting dollar quantities are for this study only and vary widely by location. For example overhead transmission costs increase three-fold when suburban construction is a primary component.

For this study it has been assumed that aggregating generating capacity at a park will increase the average distance from generator to load.

One other assumption needs to be emphasized, the use of the values in Table 3-11 implies that transmission investment increases linearly with the installation of generation.

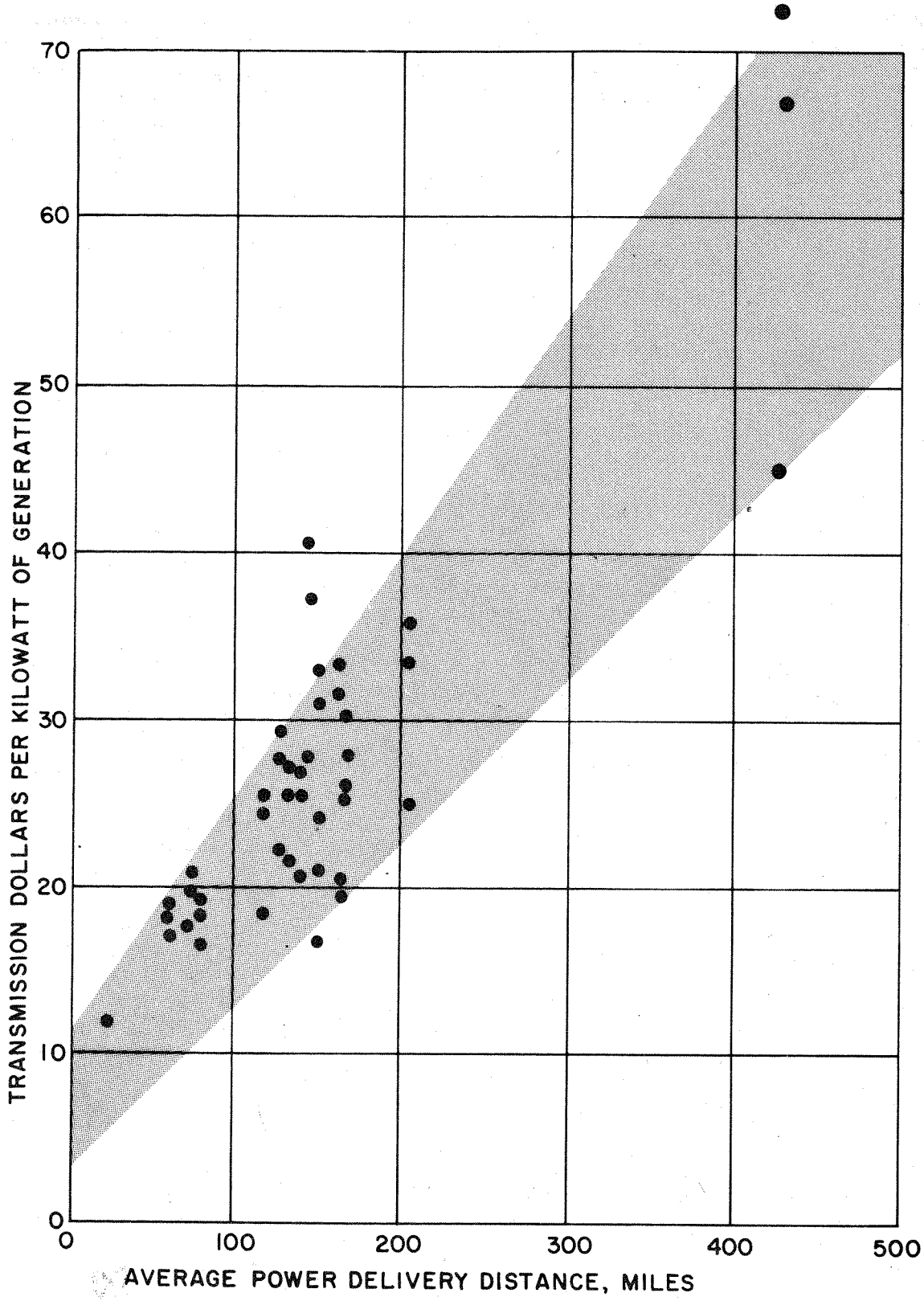

Figure 3-11 Investment in Transmission (Excluding Land) As Affected By the Average Distance Between Generation and Load. Costs Based on January, 1974 Values in Table 3-1.

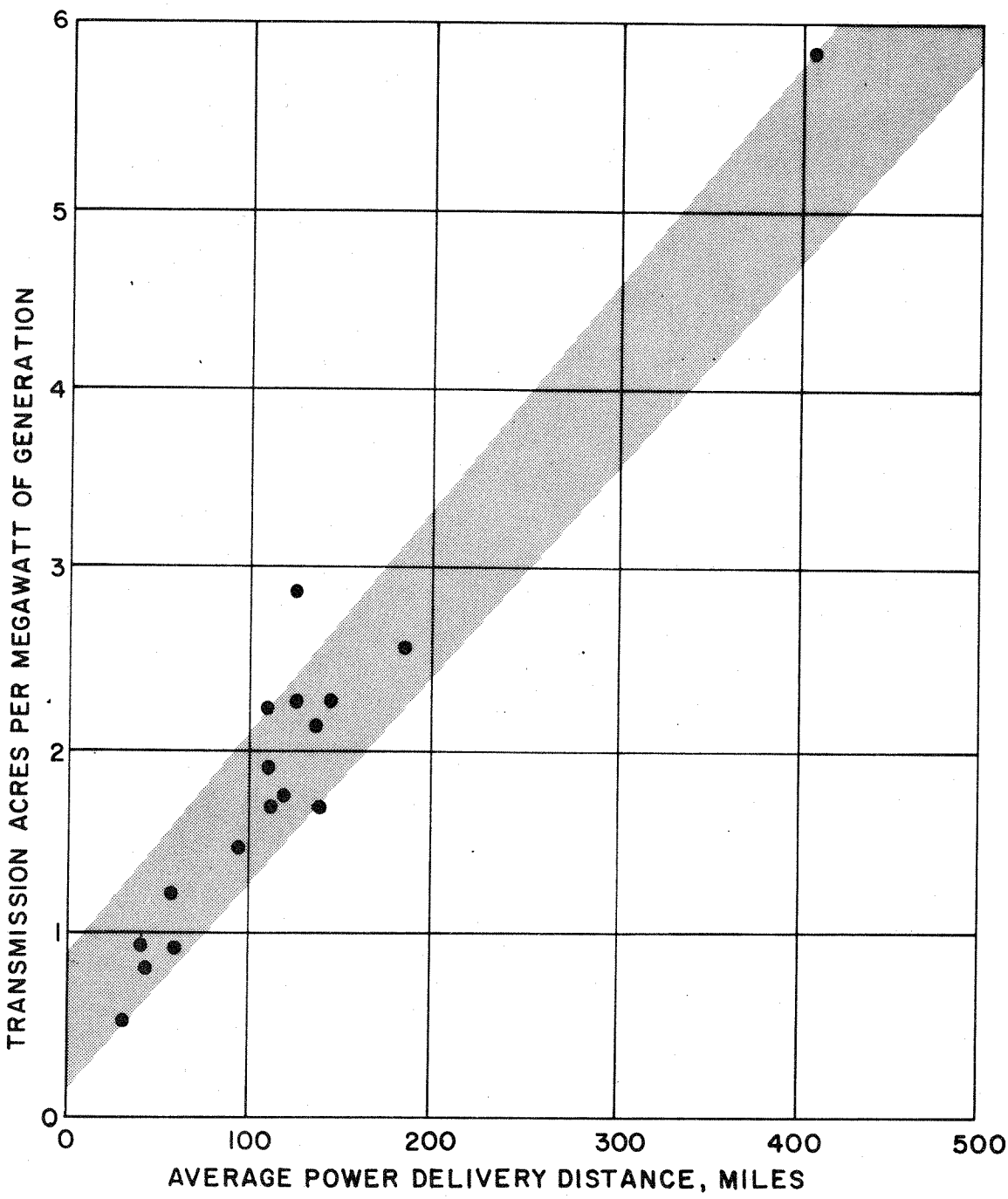

Figure 3-12 Land Required for Transmission Rights-of-Way as Affected By the Average Distance Between Generation and Load.

To confirm this assumption the linear cost line was graphed in Figure 3-13, along with the year-by-year investments found in the example power pool study of Section 3.4.6. The transmission investment jumps above the linear cost line for the first two units and then slowly settles back to it. The dispersed siting alternative also rises above the straight line approximation. Therefore the transmission difference between parks and dispersed sites was judged to be proportional to generation capacity for the purposes of this study.

3.5.3 U.S.A. Energy Park Model

To estimate the relationship of transmission investment to the power delivery distance a 400 location model of the continental U.S. was developed from the 1970 National Power Survey. These locations were described by their latitude and longitude coordinates. The 340 load locations were also given loads proportional to those forecast for 1990 and adjusted so that the total in each region matched the total capacity of the parks in the region. The same computer program that was used for the 20-year example power pool expansion of Section 3.4 was also used for this one year expansion of six regions. The power pool study included the existing power system while the U.S. study included only new generation with load growth to match and no existing transmission. Existing loads, generation and transmission were excluded from the model. The results give a first order indication of the amount of additional transmission that would be required to serve electrical loads from energy parks located in almost every conceivable relationship to these loads.

3.5.3.1 PARK SITING FOR STUDY PURPOSES. The exact study procedure can best be understood by describing the overall principles involved for all six (6) regions and then tracing through the details for one of the six regions, Region 2 (East Central).

The first task was to apportion sixty (60) energy parks throughout the USA on a regional load basis as indicated by the FPC Forecast for 1990[3-6]. This apportionment was done on a preliminary basis and then refined during the siting process, resulting in the fifty-nine (59) parks shown in Table 3-13.

The following seven general considerations were used in choosing the sites:

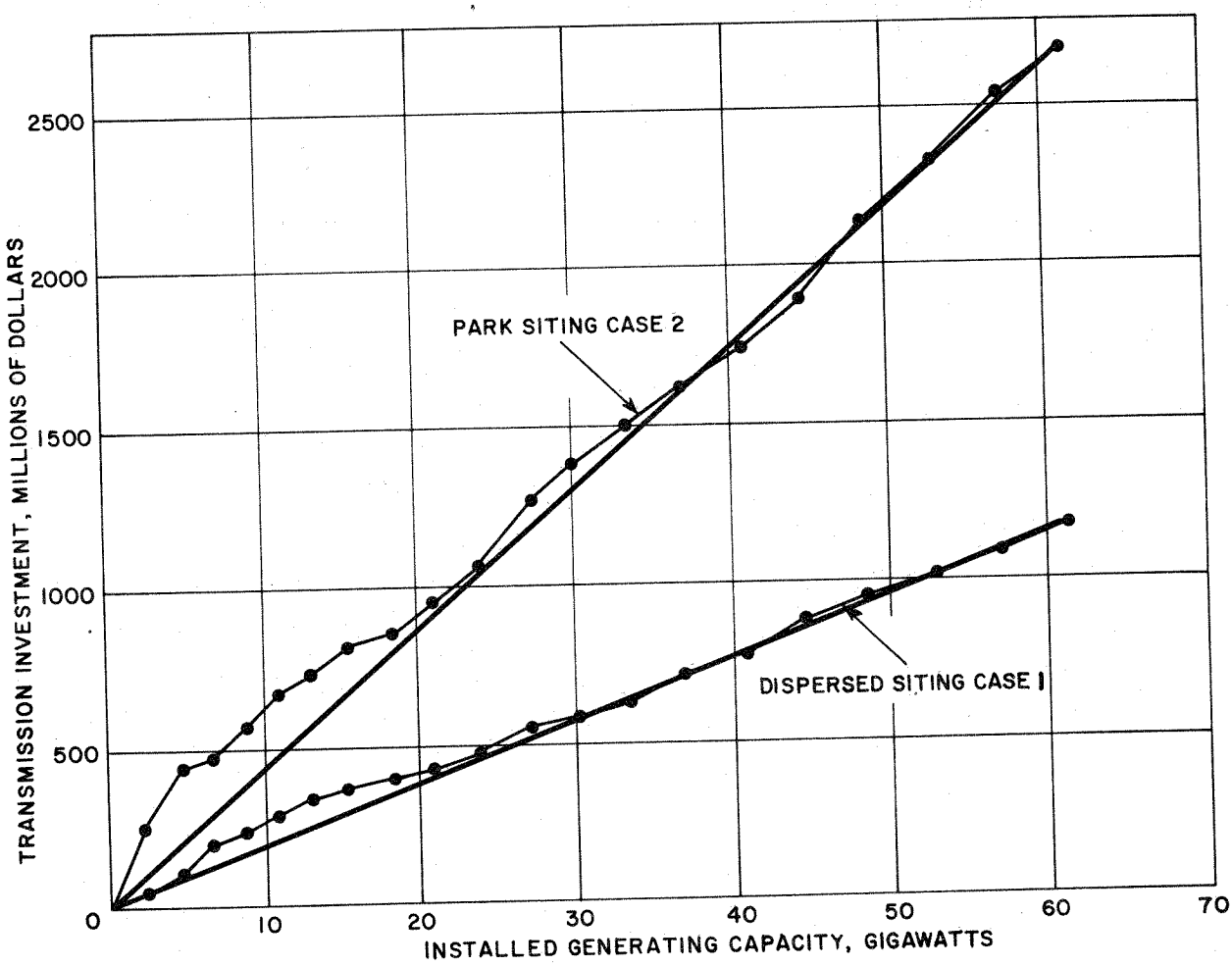

Figure 3-13 Linear Approximation to the Transmission Costs Versus Park Size Generating Capacity of Figure 3-5.

Table 3-13 Number of Energy Parks in Each Region

REGION	FPC 1990 LOAD FORECAST (GW)	REGIONAL DISTRIBUTION %	INITIAL PARK ASSIGNMENT PER REGION	FINAL PARK ASSIGNMENT PER REGION
1	164.7	16	10	10
2	148.0	14	8	8
3	211.9	20	12	12
4	128.6	12	7	8
5	181.8	17	10	9
6	216.4	21	13	12
TOTAL	1051.4	100	60	59

1) Availability of cooling water.
2) Availability of coal.
3) Location of major load centers.
4) Distances between proposed sites.
5) Utility preferences for future generation (per FPC Report).
6) Topographical aspects affecting transmission paths from the site.
7) Transportation

For Region 2 (East Central) the first task was to obtain a good size working map of the area; fortunately this region was amply covered by a map published by the ECAR utility group (East Central Area Reliability). This map shows the "principal power supply facilities existing and authorized - January 1970." An overlay tracing from this map was made and the load centers as listed for Region 2 from the FPC report were placed on the tracing. There were a total of seventy, some were on the original ECAR map, many were not.

Aeronautical charts were then used to find the latitude and longitude of the individual load centers and these data were listed for submission to the Transmission Network Expansion Planning computer program. The charts also aided in assessing the impact of topographical features affecting site location and transmission paths.

Next a rough approximation was made for the location of park sites by examining the water resources in the Region 2 area and coal resources. A list where 1 or 2 parks each could be located would be:

1) Southern Lake Erie area.
2) Western Lake Huron area.
3) Eastern Lake Michigan area.
4) Ohio River and tributaries.
5) Indiana coal field area.

These areas are shown shaded in Figure 3-14 together with load centers designated by circles whose radii are proportional to FPC 1990 levels and also to the year 2000 load levels for this study. The larger loads were related to the 26 GW parks yielding a rough idea of preferred sites. Since it was established that 8 parks were required, they were set down on the Region 2 map generally in a dispersed manner. For example, where a subregion like the Detroit area required two (2) plants, these were kept apart. Care was taken to see that the sites in adjoining FPC regions were not located close to sites in this region.

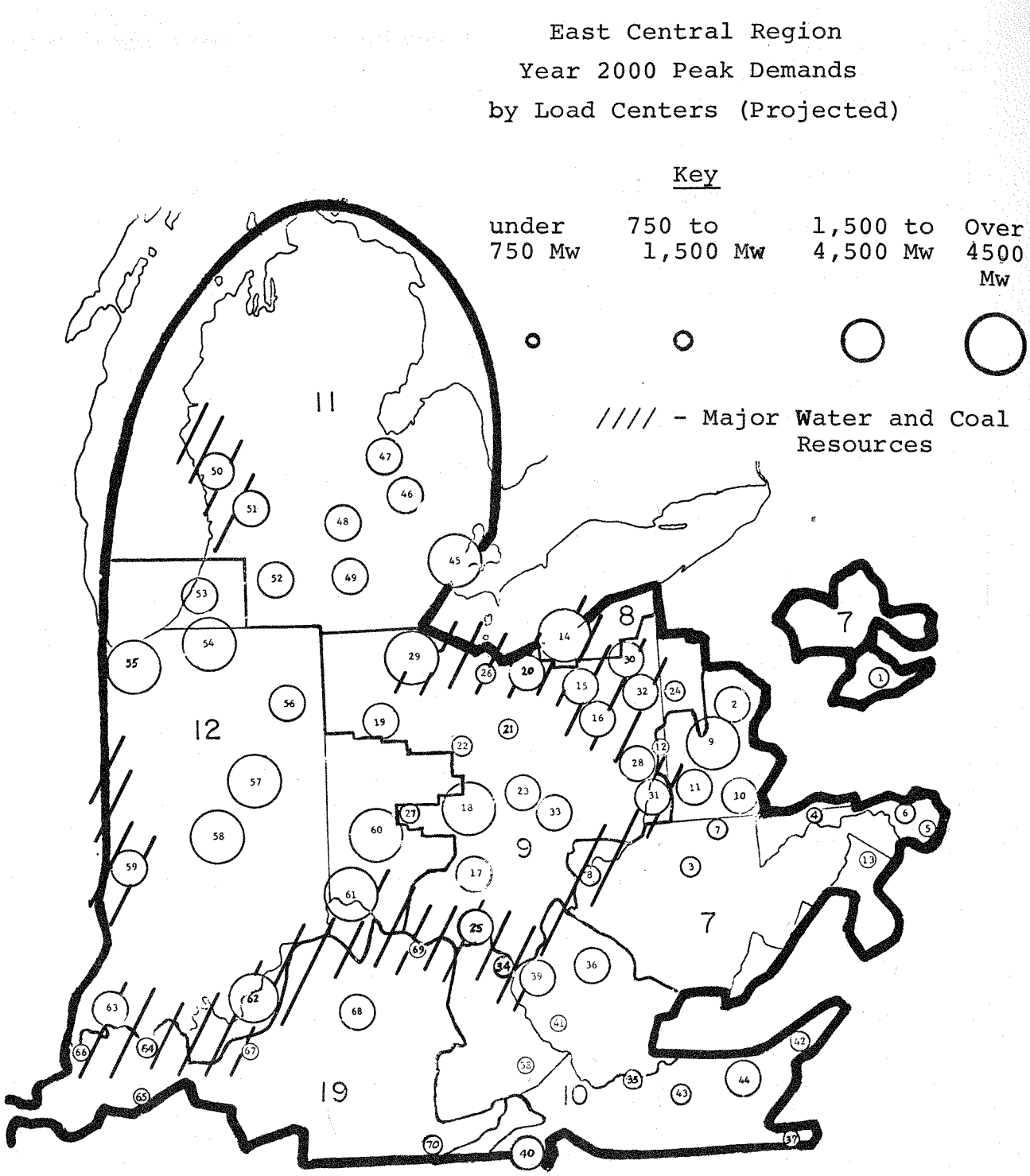

Figure 3-14 East Central Region Load Centers Abstracted From the 1970 National Power Survey, Page II-2-20.

In the process of setting down these proposed sites, the FPC report for Region 2 was canvassed for future generation sites. For Region 2, some definitive sub-regional locations had been listed. These sites influenced the site selection process.

At this point, aeronautical charts were consulted for those topographical features in the general site areas that might prove troublesome for the transmission line right-of-way such as mountains, bodies of water, heavily populated areas, and wildlife and nature preserves. With all of the above in mind, the first site choice in the Region 2 area (Park #18) was made for and in the general Pittsburgh area. An exact site location is required and the Ohio River area west of Pittsburgh was canvassed and the coordinates (80.58° LONG.; 40.42°) were selected. This particular site allows a straight, unencumbered path to the Pittsburgh complex and also the Akron-Cleveland area. It should be pointed out regarding this particular choice of site coordinates, that sites equally suitable were available at least ±5 miles up and down the Ohio River. Much of the data envolved in the total study would be invariant to small changes in site location. In many cases the exact location was chosen because of the proximity of a railroad terminal.

The next two sites in the Region 2 area, Parks 19 and 20, were both chosen for their relationships to the water and load criteria of the Southern Lake Erie region. The site for Park 19, northeast of Cleveland, on the lake shore, provides service for the Cleveland, Akron, and Youngstown loads. The site for Park 20, southwest of Toledo was pulled back from the immediate lake area to allow a relatively unencumbered path to the Detroit load area and be somewhat closer to the park sites contemplated for the western portion of Region 2. In a similar and iterative manner, the remaining park sites for Region 2 were chosen and these are presented in Figure 3-15.

In summary, these site choices utilize the water and energy resources of Region 2 and are in reasonable context with major load centers and each other. Future generation plans of the local utilities have been factored into the siting process. Particular care was taken regarding the topographic features of Region 2 to the extent defined by the sectional aeronautical charts.

After the site choices were made, several possible transmission routes were drawn to the major load centers involved. The load centers were also interlaced with many possible transmission routes. As before, these interconnecting routes were chosen with respect to topographic features.

3.5.3.2 PLANNING PROCEDURE. Once the locations of generation and loads were defined along with the many possible routes for transmission circuits the Transmission Network Expansion Planning computer program structured a network with sufficient transmission capacity. The tests for sufficient transmission capacity included these conditions:

1. A normal dispatch schedule with all plants operating at full output. A dispatch is a detailed listing of output from each generating unit and the demand at each load.
2. For each park a double contingency dispatch with one large unit (1300 MW) out with makeup power supplied from the load area, simulating planned maintenance plus one bus (5200 MW) out with 100% from external ties simulating a sudden outage and total makeup from outside the region, an assumption meant to maximize the amount up tie capacity.
3. During the normal dispatch the loss of the two heaviest loaded transmission lines away from each plant.
4. During the normal dispatch the loss of any transmission line in the system.

The Transmission Network Expansion Planning program computed the necessary network for the condition with all parks fully developed and serving a total load equal to the installed generation. This procedure when repeated for each of the six regions resulted in 533 500-kV circuits and 674 765-kV circuits on the routes shown in Figure 3-15, the map of the U.S. with 59 energy parks. The result is an interconnected grid of 500 kV and 765 kV circuits linking parks to load centers, parks to parks and load centers to load centers. Interconnections between the regions were also planned so that capacity of neighboring systems would be available for assistance in case of the sudden loss of 5200 MW, the capacity of one bus at a park. The model in Figure 3-15 gives 59 sample park siting situations and their resulting transmission requirements. It is not intended as a possible plan of development for the U.S. or any region.

3.5.3.3 TRANSMISSION INCREASE FOR AN ENTIRE PARK OUTAGE. The effect on transmission investment if planning to operate through the peak load period with one park entirely out of service was studied by increasing the planning requirements to include bringing 100% of the park capacity from the interconnection points. This was included for each of the

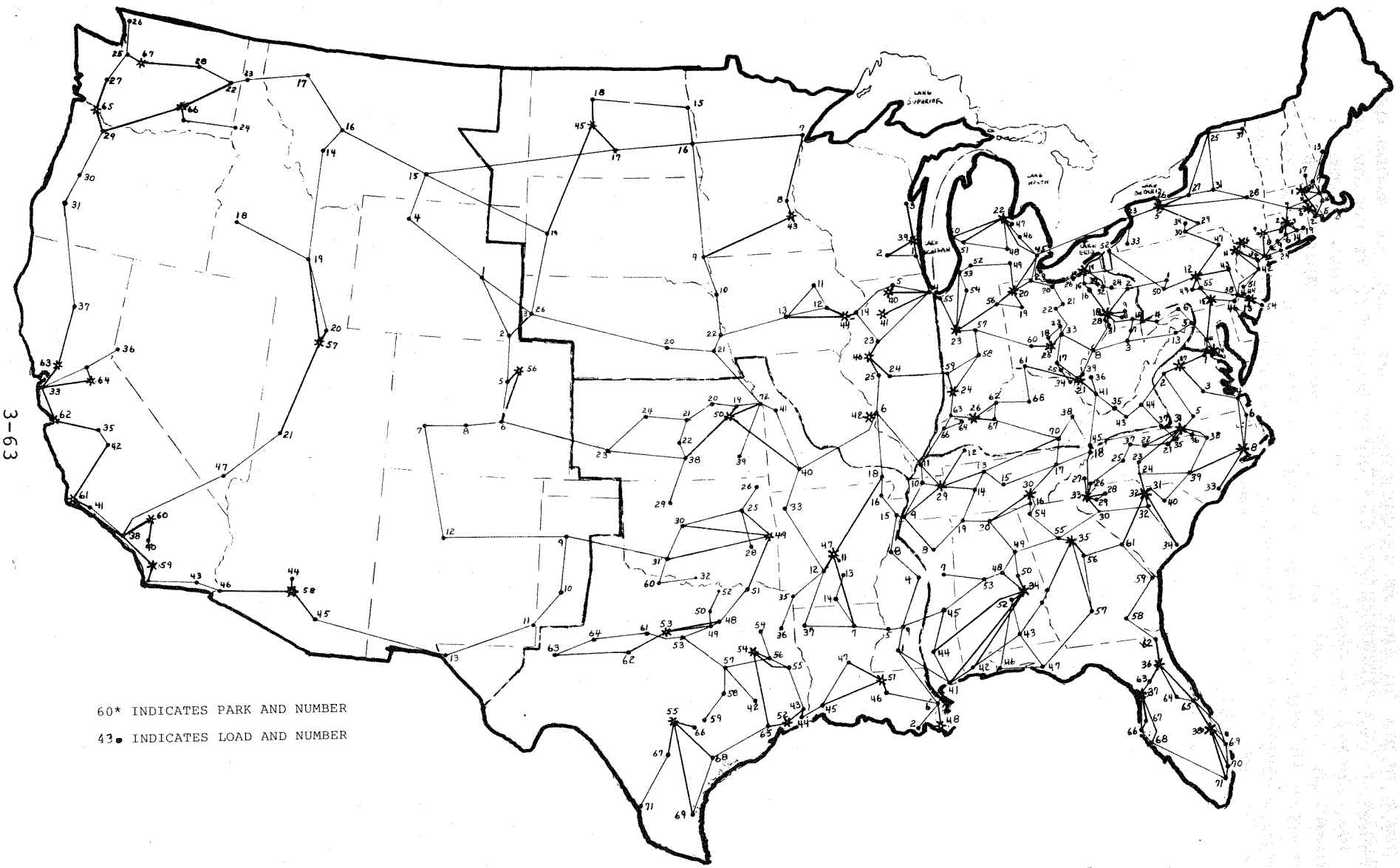

Figure 3-15 USA Model Used In Developing the Incremental Transmission Costs Shown in Table 3-12.

ten park sites in the Northeast with the results tabulated in Table 3-14. Increasing the outage from 2.5% to 10% of the new installed capacity increased the transmission investment by 10%, and the land requirements by 11%. Not allowing for any capacity pickup in the region is an extremely expensive transmission assumption putting an upper bound on the increased investment needed to give the flexibility to operate after an entire park outage.

Table 3-14 Effect of Outage Magnitude on Transmission Costs

OUTAGE (1)	CIRCUITS ADDED KV (2)	MILES (3)	NO. (4)	INCREMENTAL $/KW (5)	ACRES/MW (6)	PERCENT INCREASE $/KW (7)	ACRES/MW (8)
Northeast: 6 Unit Outage 6500 MW, 2.5% of regional capacity.	500 765	4251 3762	102 83	7.6	0.71	0.0	0.0
Northeast: Park outage 26000 MW, 10% of regional capacity.	500 765	4897 4105	123 87	8.4	0.79	10%	11%

3.6 REFERENCES

3-1 "Transmission Line Reference Book 345 kV and Above", Electric Power Research Institute, Palo Alto, California, 94304, 1975.

3-2 "EHV Transmission Line Reference Book", Publication 68-900, Edison Electric Institute Publication, New York, 1968.

3-3 "Power System Operation", R.H. Miller, McGraw-Hill, New York, 1970.

3-4 "Electric Utility Systems and Practices", H.M. Rustebakke (Editor), Electric Utility Systems Engineering Department, Publication GEZ-2587B, General Electric Company, Schenectady, New York (1974).

3-5 "Elements of Power System Analysis", W.D. Stevenson, Jr., McGraw-Hill, New York, 1962.

3-6 "1970 National Power Survey", Federal Power Commission, 1970.

3-7 "Electric Forum", General Electric Company, Schenectady, New York, Volume 1, No. 1 (1975).

3-8 "Contracts for Electric Utility Interconnection", L.B. LeVesconte, IEEE Trans., Vol. PAS-84, 1965, pp. 458-463.

3-9 "Project Independence Blueprint -- Electric Power Transmission Facilities", I.B. Johnson, W.C. Kracht, H.O. Simmons, Jr., General Electric Company, Schenectady, New York, 12345, 1974.

3-10 "The New Brunswick Electric Power Commission Solid State HVDC Asynchronous Tie Installation", G.D. Breuer, J.L. Fink, F.H. Ryder, C.M. Stairs, 1970 Proceedings of the American Power Conference.

3-11 "System Design Considerations of the Eel River HVDC Converter Station", J.L. Fink, R.V. Pohl, F.H. Ryder, C.M. Stairs, paper 14-05, CIGRE 1972 Session.

3-12 "The Influence of the Eel River HVDC Conversion Facility Performance on the Design of Future HVDC Terminals", D.M. Demarest, J.L. Fink, F.H. Ryder, C.H. Titus, paper 14-06, CIGRE 1974 Session.

3-13 "Effective Load Carrying Capability of Generating Units", L.L. Garver, IEEE Trans., Vol. PAS-85, 1966, pp. 910-919.

3-14 "1974 Report of the Member Electric Corporations of the New York Power Pool and the Empire State Electric Energy Research Corporation Pursuant to Article VIII, Section 149-6 of the Public Service Law of New York State", April 1, 1974.

3-15 "Transmission Network Estimation Using Linear Programming", L.L. Garver, IEEE Trans., Vol. PAS-89, No. 7, 1970.

3-16 "Theory and Application of the Commutation Principle for HVDC Circuit Breakers", A.N. Greenwood, T.H. Lee, IEEE Trans. Power Apparatus and Systems, Vol. PAS-91, No. 4, pp. 1570-1574, July/August 1972.

3-17 "Design and Testing of the Nelson River HVDC Converter Stations", A.F. Buelow, R.E. Harrison, R.K. Shemie, paper 14-04, CIGRE 1972 Session.

TASK 4
NUCLEAR ASPECTS

Contents

		Page
4.1	SUMMARY	4-2
4.2	OVERVIEW	4-5
4.3	NUCLEAR POWER REACTORS	4-48
4.4	ENERGY SUPPLY - THE NUCLEAR FUEL CYCLE	4-63
4.5	NUCLEAR FUEL REPROCESSING	4-109
4.6	NUCLEAR FUEL FABRICATION	4-166
4.7	WASTE MANAGEMENT	4-195
4.8	FUEL AND WASTE TRANSPORTATION	4-217
4.9	ENVIRONMENTAL ASPECTS	4-236
4.10	SAFEGUARDS ASPECTS	4-250
4.11	POWER PLANT COSTS AND IMPROVED CONSTRUCTION	4-262
APPENDIX 4.A1	CONCRETE MODULARIZATION STUDY	4-318
APPENDIX 4.A2	STEEL/WATER MODULE STUDY	4-365
APPENDIX 4.A3	PRIOR PARK STUDIES	4-400
ACKNOWLEDGMENTS		4-405
REFERENCES		4-406

ASSESSMENT OF ENERGY PARKS VS DISPERSED ELECTRIC POWER GENERATING FACILITIES NUCLEAR ASPECTS

4.1 SUMMARY

4.1.1 Study Basis

The presently developing U.S. nuclear industry is reviewed as representative of dispersed mode generation and support facilities. It is reviewed in the light of recent regulatory developments, a continuing unclosed fuel cycle (no plutonium recycle), and a rapid rise in construction costs in particular. Those aspects of this industry which could potentially be affected by adoption of park or integrated facility development in the future are identified and the more pivotal of these evaluated overall. The evaluation is conducted recognizing the importance of relating any potential future park type development to the present dispersed mode. The evaluation is encumbered by the long parks implementation time scales involved, typically through the year 2015! This makes for great uncertainty and the need for maximum flexibility in any park plans.

4.1.2 Overall Finding

Two positive aspects of parks as an alternate to dispersed generation appear to be the potential for closing and integrating portions of the fuel cycle, and the scope for construction economies in multi-unit light water reactor (LWR) facilities. Less clearly definable impacts include the effects on nuclear facility licensing, site acquisition, facility ownership and operating organization structure. These predominantly socio-financial issues have been pursued in some depth in a parallel study - Task 6.

4.1.2.1 FUEL CYCLE INTEGRATION. The conclusions from the work of this present study are that ultimately substantial benefit to the nuclear fuel cycle and safeguards might be derived from integration of spent fuel recovery and plutonium fabrication facilities at one site. Still further benefit might be gained by the planned introduction of dedicated "plutonium burner" or PuB type reactor parks with integral reprocessing facilities, these to operate in conjunction with existing and planned dispersed generation facilities in the same region or powershed. All plutonium handling and recycle would then be within the park. No minimum feasible size for the proposed PuB parks has been identified; however, a 4 unit LWR site (~5000 megaWatts electrical, MWe) coupled with a 500 metric tonne* per year, (MT/yr) reprocessing facility and

*MT = metric tonne = 1000 kg = 2205 lb

10 to 15 nearby dispersed site LWRs has been appraised. Thus capital commitments at a single PuB site might be held to under $3 billion in 1975 dollars.

4.1.4.4 ECONOMICS OF MULTI-UNIT FACILITY. Fuel cycle economies of parks five to ten times this size are not expected to exceed 0.5 mills/kWh and desirable flexibility may be lost through the loss of diversity in a national commitment to such a scale of endeavor. On the other hand, relative to present dispersed mode LWR installations, major construction economies may only become apparent for postulated large fully standardized plant parks (10,000 to 25,000 MWe); the practicality may depend on restructuring of the industry. Flexibility in more modest (4 to 8 unit) PuB site development may be achieved through an initial commitment for spent fuel storage alone, with other stages of recovery, PuB reactors construction, and plutonium recycle to follow later when proven economic.

4.1.3 Future

Follow-on program requirements have been identified and include more rigorous site and system specific studies, particularly modular construction economies, and in-depth technical analysis of the LWR plutonium burner concept and its detailed economic and safeguards worth.

Further definition of the many current regulatory uncertainties and in-depth appraisal of the true magnitude of various elements of the presently perceived safeguards threat are also necessary, particularly as organized pilfer, while less spectacular than armed intrusion, is suggested as potentially the more significant factor.

Subchapter Contents

		Page No.
4.2	OVERVIEW	4-5
4.2.1	Introduction	4-5
4.2.2	Conclusions	4-9
4.2.3	Key Assumptions and Alternates	4-13
4.2.3.1	TIME SCALE	4-13
4.2.3.2	POWER GENERATION REQUIREMENTS	4-13
4.2.3.3	POWER PLANT TYPES	4-15
4.2.3.4	POWER PLANT SIZE	4-15
4.2.3.5	POWER PLANT COSTS	4-15
4.2.3.6	NUCLEAR FUEL	4-17
4.2.3.7	SEPARATIVE WORK	4-17
4.2.3.8	URANIUM OXIDE FUEL FABRICATION	4-17
4.2.3.9	REPROCESSING	4-17
4.2.3.10	RECYCLED URANIUM VALUE	4-17
4.2.3.11	PLUTONIUM AND ITS FABRICATION	4-17
4.2.3.12	WASTE MATERIAL	4-17
4.2.3.13	TRANSPORTATION	4-17
4.2.3.14	SAFEGUARDS	4-18
4.2.3.15	REGULATIONS	4-18
4.2.3.16	CASES STUDIED	4-18
4.2.3.17	CONSTRUCTION DATA	4-18
4.2.4	Fuel Cycle Integration Alternates and Parks	4-20
4.2.5	The Nuclear Industry and Its Trend Without Parks (Dispersed Mode Expansion)	4-31
4.2.6	Possible Improvement of Nuclear Plant Construction Through Parks	4-34
4.2.7	Remaining Uncertainties and the Future for Parks vs. Dispersed Generation	4-41

4.2 OVERVIEW

4.2.1 Introduction

The nuclear industry has been developing since the 1954 "Atoms for Peace" legislation of the Eisenhower administration. Much of this civilian nuclear power development has focused on low enrichment light water "converter" reactor systems. The concept of a closed nuclear fuel cycle for these systems in which plutonium production would temporarily recycle or directly feed to a subsequent generation of fast breeder reactors was established not too long thereafter. This then is the theme under which the nuclear power industry has developed for two decades. It has done so in the footsteps of the fossil fired power plants utilizing dispersed generation sites and individual unit sizes comparable with those for its fossil fired precursors and competitors (up to 1300 MWe).

Contrary to the plan however, nuclear plants have not yet closed the fuel cycle. This together with several other developments or variations from plan serve to make the current effort to appraise the concept of energy parks vs. the existing dispersed siting a particularly appropriate appraisal. These added considerations are listed in Table 4-1.

Table 4-1 Current Situation - Nuclear Generation Siting

- 200 DISPERSED NUCLEAR GENERATION SITES COMMITTED - POTENTIAL DOUBLING OF SITE REQUIREMENTS EVERY 10 YEARS - THIS BEFORE CONSIDERATION OF FUEL CYCLE FACILITIES.
- AVAILABLE FRESH WATER RUN-OFF CAPACITY FOR ONCE THROUGH COOLING STRAINED BY PRESENT FOSSIL AND NUCLEAR GENERATION UNDER RECENT WATER QUALITY ACT.
- PLANT CONSTRUCTION COSTS RISING UNACCEPTABLY DUE TO DETERIORATING LABOR PRODUCTIVITY, LIMITED STANDARDIZATION, ETC.
- A CONCERN OVER POSSIBLE UNAUTHORIZED DIVERSION OF SPECIAL NUCLEAR MATERIALS NOW EMERGING.
- ENVIRONMENTAL CONCERN OVER POTENTIAL EFFECTS OF TRACE QUANTITIES OF ACTIVE MATERIALS FROM THE NUCLEAR FUEL CYCLE CONTINUES IN DEBATE.
- COMMERCIALIZATION OF THE FAST BREEDER REACTOR, THE PREFERRED ULTIMATE RECIPIENT OF PLUTONIUM FROM WATER REACTORS, NOW SUBJECT TO DELAY (POST1990?)

While the fundamental concept of grouping generation facilities together in an energy center or park is not novel, two potential features are of particular relevance to the nuclear industry at this time:

(1) Opportunities to integrate various portions of the nuclear fuel cycle at a given site, thus minimizing special nuclear material shipments.

(2) Opportunities for major construction economies to halt the rising capital cost trend through a stabilized labor force and use of novel modular assembly and construction techniques.

Each of these opportunities has been investigated in some depth in the present study. This has been done recognizing the large array of options or alternates both with regard to fuel cycles, the associated reactor systems and the park configurations in which they might reside (Table 4-2). Key cases have been compared on a parks basis with estimates of what is expected to result from continuation of the present dispersed mode of plant construction. Throughout the study it has been recognized that the original theme of early closure of the nuclear fuel cycle and a synergistic relationship with the fast breeder reactor is, at a minimum, subject to question prior to the period 1990-2000. In fact, it has become apparent that the fuel cycle costs for the light water reactors (LWRs) may now be no more expensive with prolongation of the present interim storage of unreprocessed spent fuel than with the prior planned prompt reprocessing and plutonium recycle. This is a direct result of plutonium facility uncertainties and increases in unit cost estimated for reprocessing and plutonium fabrication.

The overall approach of the study is illustrated in Figure 4-1. The present basis of the industry was reviewed, the current dispersed mode characterized and its problems identified. The potential of parks was scoped out and in turn its potential problems appraised. Alternate park configurations were developed and a cost comparison of parks vs. dispersed sites compiled. Throughout the effort it was recognized that many qualitative considerations such as institutional, social and environmental factors must ultimately enter into the evaluation along with the present quantitative cost data.

Later sections of this report provide documentation of significant findings developed in the course of this study regarding the present status of commercial power reactors, their anticipated trends, their fuel cycles, the fuel processing and plutonium fabrication technologies, waste management, transportation, environmental and safeguards aspects and power plant costs and improved construction.

Table 4-2 The Nuclear Fuel Cycle, Alternates and Park Configurations

PRESENT INDUSTRY BASIS

- URANIUM FUEL CYCLE LOW ENRICHMENT LIGHT WATER CONVERTER REACTORS (LWR) GENERATING PLUTONIUM FOR RECYCLE AND LIQUID METAL-COOLED FAST-NEUTRON BREEDER REACTORS (LMFBR).
- PLANTS CONSTRUCTED IN DISPERSED MODE WITH SEPARATE CENTRALIZED RECOVERY AND PLUTONIUM FABRICATION FACILITIES PLANNED.
- INTERSITE SPECIAL NUCLEAR MATERIALS SHIPMENTS SAFEGUARDED.
- GOVERNMENT OPERATED RADIOACTIVE WASTE DISPOSAL SITES.

FUEL CYCLE ALTERNATES

- ACCELERATED EVOLUTION TO AN LMFBR NUCLEAR BASE.
- DEVELOPMENT OF IMPROVED CONVERTER (THORIUM) SYSTEMS:
  - LWR BASED (LIKE LIGHT WATER BREEDER REACTOR, LWBR)
  - HTGR (HIGH TEMPERATURE GAS-COOLED REACTOR)
  - HEAVY WATER REACTOR
- PREFERENTIAL RECYCLE OF PLUTONIUM INTO THORIUM SYSTEMS.
- INDEFINITE STORAGE OF LWR SPENT FUELS AND MAJOR EFFORTS TO EXPAND URANIUM SUPPLY RESOURCES (SEA WATER?).

ALTERNATE PARK CONFIGURATIONS

- INTEGRATED FUEL CYCLE FACILITIES (IFCFs).
- COMBINED REACTOR AND FUEL FACILITY PARKS.
- COUPLED DISPERSED GENERATION WITH DEDICATED PLUTONIUM BURNER (PuB) PARKS.
- LARGE PARKS WITH MAJOR ONSITE REPETITIVE ASSEMBLY AND CONSTRUCTION CAPABILITIES

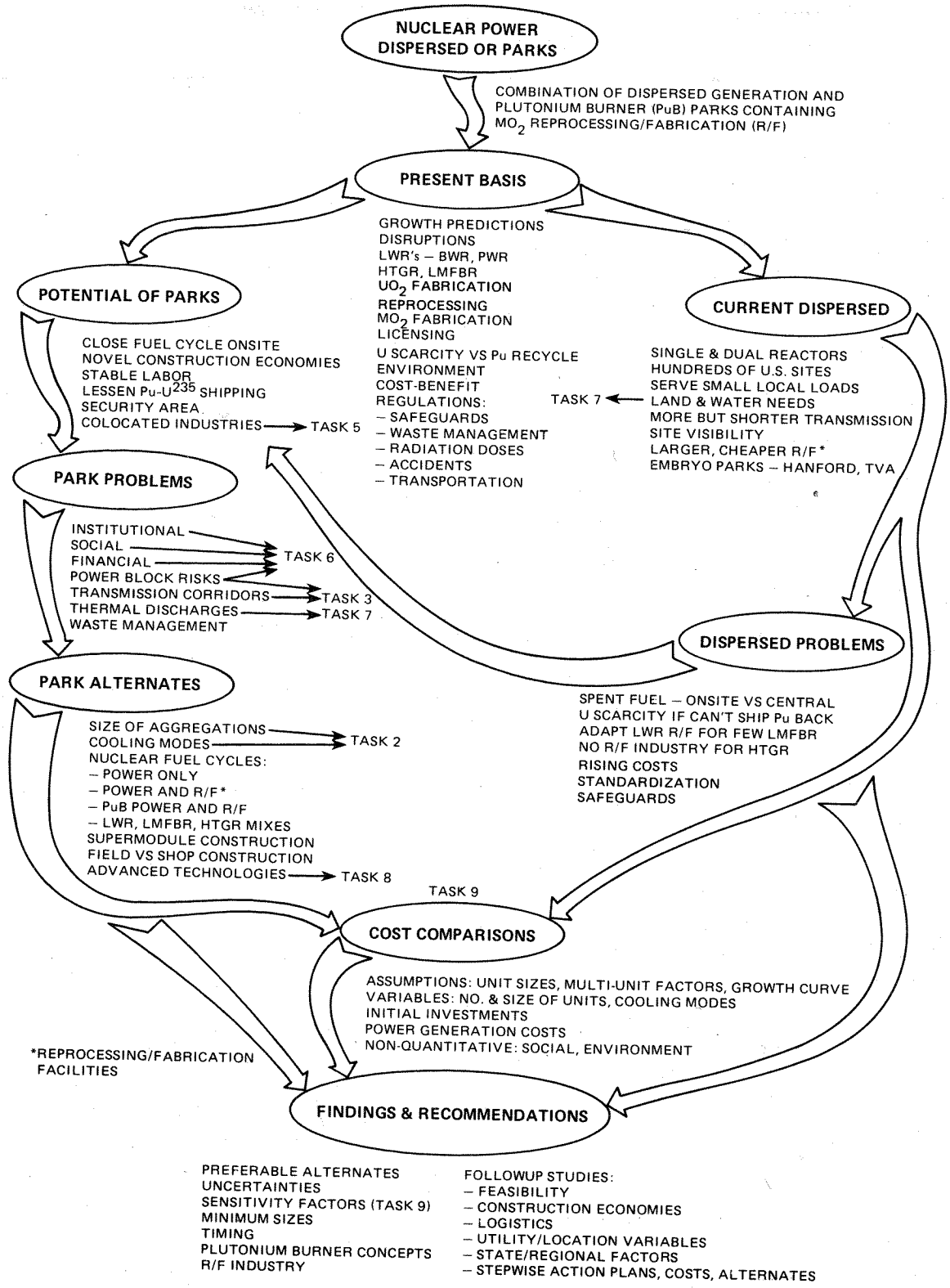

Figure 4-1 Flowsheet - Nuclear Aspects Study

4.2.2 Conclusions

The outcome of the evaluation is then a set of findings and recommendations, the most important conclusions from which are:

a. There are no technical problems preventing the construction of nuclear parks using essentially the same approach as those developed for dispersed generation. Indeed they may permit improved nuclear material safeguards and earlier closing of the LWR fuel cycle, long planned for, but as yet not accomplished. They may require additional waste processing for the combination of all facilities to meet "As Low As Practicable" (ALAP) site requirements. Separate reactor plants in the park, rather than dual reactor plants, may in fact reduce the risk of reactor safety interaction problems.

b. The introduction of integrated fuel cycle facilities (IFCF) and energy parks to operate in conjunction with today's dispersed light water reactors can reduce special nuclear material transportation risks. In the limit the plutonium burner (PuB) park concept may permit elimination of offsite Special Nuclear Material (SNM) shipment. The PuB concept involves dedicated plutonium enriched reactors located at sites together with fuel recovery and plutonium fabrication. These fuel facilities are sized to handle all plutonium bearing fuels from the integrated complex of dispersed units plus the PuB site. Such sites might be as small as a 4 unit dedicated LWR complex, a 500 ton/yr processing facility and associated plutonium fabrication coupled with a surrounding array of possibly 8 to 12 dispersed generation mode LWRs. Further technical evaluation is required, and the demands for many small installations on material and manpower resources needs further review.

c. Nuclear generation economics are dominated by the construction cost component and substantial savings may be possible in this area for large parks in an idealized case--full standardization, a major lift capability, and concrete or steel/water modular construction. By comparison, nuclear fuel cycle costs may increase for small PuB parks relative to current target costs due to loss of economy of scale. Such effects will have a less than 5% impact on total generation costs however.

d. While even small plutonium burner parks will permit extensive fuel cycle integration, very large parks of 20 or more 1300 MWe units may be required for the attainment of significant construction economy. It is questionable if the latter is practical from

social, political and financial considerations. Furthermore, relocation of the site assembly area and module lift capability every 4 to 8 units may be necessary.

e. There appears merit for further consideration of the early designation of plutonium burner park sites with a "reverse priorities" site development approach, i.e.,

- Immediate future - LWR spent fuel storage
- 10 to 15 years - Processing for uranium recycle
- 10 to 25 years - Dedicated PuB sites

This reverse priority sequence implies some flexibility on the date of major fuel reprocessing. It is financially of little or no added burden at present to continue the storeaway mode for LWR. It permits further resolution of safeguards issues, and provides time for the technology and financing arrangements to adjust to the new business and social environment. In time, economic pressures will lead to recycle of at least the uranium in spent fuel ($\sim 10\%$ of that mined and entering the fuel cycle). A longer time span to plutonium burner operation reflects similar reasoning and in addition provides flexibility regarding the direction of the breeder program and its development as the preferred user of plutonium.

f. The safeguards issue has a basic impact on the park vs. dispersed generation question. It is still considered to be in a fluid state. Risk of violence based on threats of radioactive material dispersal may prove as burdensome as those regarding nuclear detonation. Thus plutonium in nuclear facilities and transportation as the material source for overt action could be only a temporary focus in 1975. Organized pilfering from within may prove a less tractable problem than armed robbery or intrusion. It would shift the focus of safeguards effort to the less glamorous methods of extreme inventory control and away from a proliferation of armed guards.

The above conclusions are summarized together with follow-on suggestions in Tables 4-3 and 4-4.

Table 4-3 Summary Findings, Nuclear Aspects

- FUEL CYCLE INTEGRATION PROMISING:
  - PARTIAL THROUGH IFCFs (INTEGRATED FUEL CYCLE FACILITIES)
  - MORE COMPLETE THROUGH PARKS

- INTEGRATION WITH PRESENT DISPERSED LWRs ACHIEVABLE THROUGH PuB (PLUTONIUM BURNER) CONCEPT OF DEDICATED PARKS FOR PuB REACTORS

- SMALL PuB PARKS, E.G., 4 X 1300 MWe FEASIBLE, BUT LARGE PARKS (10 TO 20 X 1300 MWe) MAY BE REQUIRED FOR SIGNIFICANT CONSTRUCTION ECONOMIES.

- SOME MERIT TO STUDY EARLY DESIGNATION OF PuB PARK SITES WITH "REVERSED PRIORITIES"

NOW	LWR SPENT FUEL STORAGE
10 TO 15 YRS	REPROCESSING AND U RECYCLE
10 TO 25 YRS	PuB REACTORS IN DEDICATED PARK

- NUCLEAR GENERATION ECONOMICS DOMINATED BY LWR CONSTRUCTION COSTS. DELAY IN REPROCESSING/RECYCLE < 5% EFFECT.

- ORGANIZED PILFERING MORE SIGNIFICANT SAFEGUARDS THREAT THAN ARMED INTRUSION? THUS FOCUS MAY CHANGE

FROM:	TO:
SITE & TRANSPORT GUARDS	REFINED MUF (MATERIAL UNACCOUNTED FOR) ACCOUNTING
FENCES & ALARMS	LESS PERSONNEL ACCESS
NUCLEAR POWER FOCUS	ALL RADIOACTIVE MATERIAL SOURCES
LARGE CENTRALIZED SITES	SMALLER, DIVERSIFIED SITES

Table 4-4 Follow-On Program Plan

- BUILD
  - RECOGNITION OF PROJECT IMPORTANCE
  - PUBLIC UNDERSTANDING OF PLANNING FOR NUCLEAR INSTALLATIONS
  - INDUSTRY CLARIFICATION OF REQUIRED FUEL CYCLE CLOSURE ACTION
- ESTABLISH MAJOR FOLLOW-ON ITEMS:

TIMING	ITEMS FOR RESOLUTION/ACTION	PROPOSED PROGRAM
1975	CURRENT DATA REVIEW	KEY UTILITIES SURVEY AND CRITIQUING
1976-77	SPECIFIC UTILITY EVALUATIONS	PREPARE ALTERNATE SITE DEVELOPMENT SCENARIOS
1976	ROLE OF PLUTONIUM DENATURING	CONCLUDE EPRI STUDIES
1976-77	ROLE OF PLUTONIUM BURNERS	VENDOR DESIGN FEASIBILITY STUDIES
1978	PuB OR ALTERNATE DEFINITION	SELECTED UTILITIES PREPARE PuB PARK PLANS
1978-79	PARK SITE DEVELOPMENT	SPECIFIC UTILITY SITE COMMITMENTS/ LICENSING

4.2.3 Key Assumptions and Alternates

It is fundamental to this study of parks versus dispersed generation that analyses should extend over a time period at least equal to the likely range of construction and generation lifetimes for the proposed parks. Prior studies have suggested parks of as much as 40,000 MWe of generating capacity and on a basis of 1 to 2 units of approximately 1000 MWe being placed on line per year, a construction period alone extending well past the year 2000 is implied. With an operating period extending beyond this, the changing operating environment puts the viability of any specific set of assumptions in question. It raises a fundamental question of credibility of any analysis of a venture requiring long term predictability of the environment for its realization. The real objective for a long term venture such as the proposed parks is perhaps its ability to adapt with the inevitably changing environment. This tends to strike against standardization, against simplifying assumptions, and thus places conventional enginneering analyses overall in some jeopardy. It also leads to questions about eventual retirement of facilities, or even scope for a continuing process of park rejuvenation. The complexities of such real life scenarios are immense. Simplifying assumptions for the present study have been made, fully recognizing that alternates are possible and in many cases, equally credible. The value of the present assumptions is that they do permit a consistent basis for study and analysis to be completed. They may also permit demonstration of some of the major areas of sensitivity for parks and for dispersed sites. Further exploration of alternate assumptions, particularly in some of the more critical areas, would be an appropriate follow-up beyond this study.

4.2.3.1 TIME SCALE. A 40 year time span extending to the year 2015 is assumed.

4.2.3.2 POWER GENERATION REQUIREMENTS. A decreasing load growth rate is served by either parks or dispersed generation and corresponds to one 1300 MWe base load nuclear unit addition per year, for the years 1985 through 2004. This corresponds to one small sector - possibly 1/30th of the total U.S. scene.

4.2.3.3 POWER PLANT TYPES. A light water dominated scenario is visualized in which the nuclear industry continues to evolve under financial and other external pressures and demonstrates increasing reliability through many tens of large (> 1000 MWe) units accumulating many hundreds of reactor years of sound operating experience. These very same pressures on the industry severely limit the broad adoption of other reactor types, notably HTGRs, LMFBRs, Light

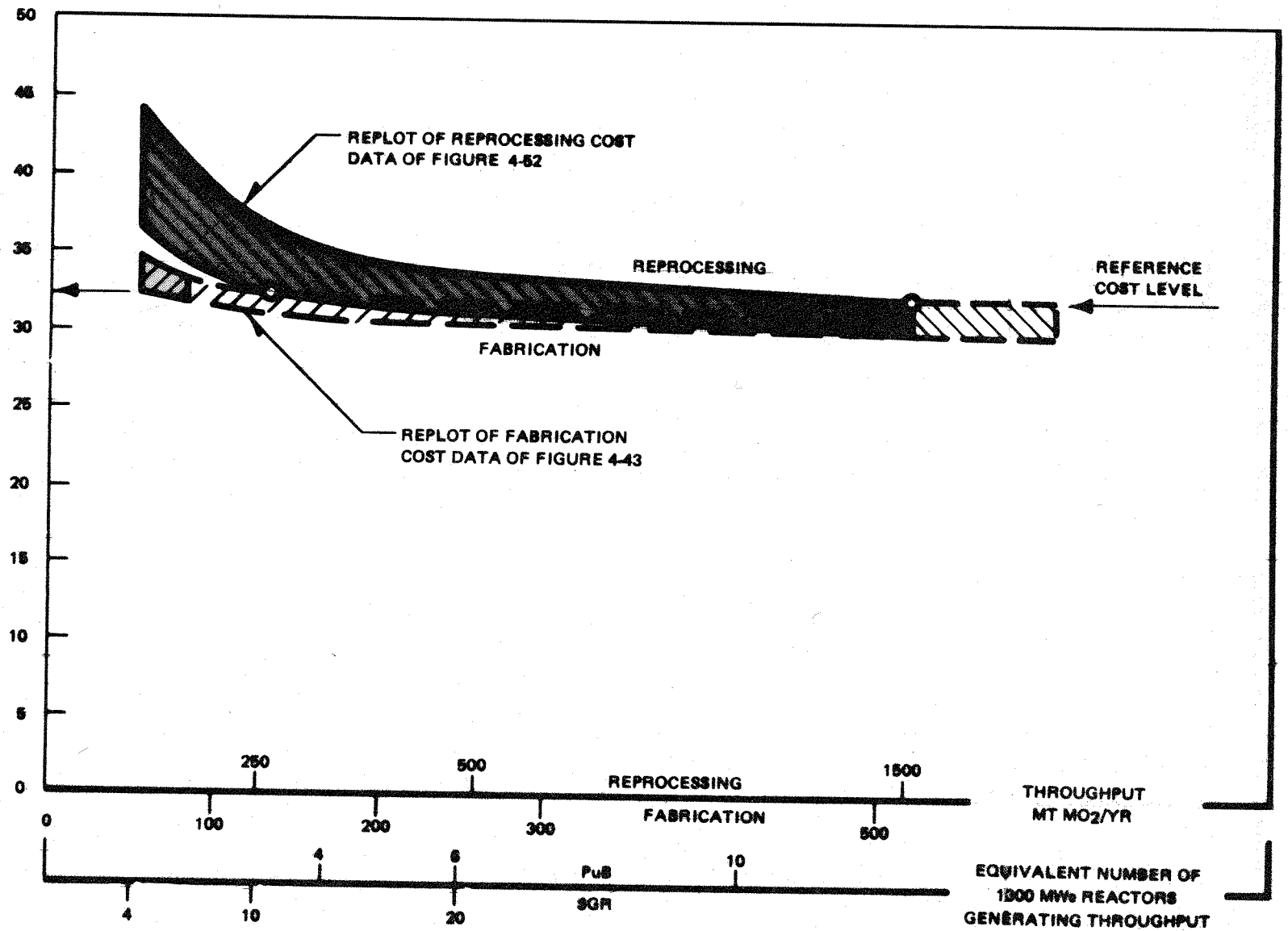

Figure 4-2 Impact on Fuel Cost of Recycle Facility Uncertainties and Throughput

Water Breeders, molten salt breeders, Heavy Water Reactors, etc., all of which are potential later candidates for parks as and when their development has progressed sufficiently.

4.2.3.4 POWER PLANT SIZE. All plants to have an approximately 1300 MWe net rating corresponding to standardized LWRs built to the present ceiling rating of 3800 MWt. While it is recognized that future larger units are anticipated by many, this is not considered a first order effect on the major question of parks vs. dispersed generation.

4.2.3.5 POWER PLANT COSTS. LWR cost data are comparable with WASH-1230 cost data and adjusted per the theme of WASH-1345 to yield a base line cost of $457/kWe for a first unit of a two unit plant. To a first approximation this unit cost level is assumed independent of size over the range 1000 to 1300 MWe. It is referenced to Chicago area construction costs; adjustments are required for other areas with different labor rates, productivity, and unique site situations. The costs include all indirect construction costs and contingencies but are subject to escalation and interest during construction from a 1/1/75 base line date (Figure 4-3).* Other site dependent adjustments are then applied to this base. Costs at the stage of commercialization for non-LWR systems are anticipated to be somewhat higher but this is not judged a critical issue for the present parks vs. dispersed generation study.

4.2.3.6 NUCLEAR FUEL. A continuing availability of uranium and of separative work from U.S. sources is assumed such that LWR net fuel cycle costs on either a storeaway or a plutonium recycle basis approximate 32¢/million BTU unescalated beyond a 1/1/75 base. The actual BWR and PWR core design data were inferred from current industry sources (e.g., "FUEL TRAC" reports). Costs of uranium supply are forecast to rise but not dramatically (approximately unescalated factor of 2) beyond the current $12-to-$15/lb level, new resources and increased volume production being anticipated as a tempering pressure. Costs of separation, reprocessing and fabrication benefit from technological and volume advances. Overall the LWR nuclear fuel cycle costs are assumed to rise generally in accord with the overall rate of escalation. To a first approximation (neglecting transportation adders) these fuel cycle costs, which represent a major increase over past industry estimates, will be similar for both parks and dispersed site plants. (See Figure 4-2). Fuel cycle costs for non-LWR systems are potentially lower but somewhat uncertain at this stage of development.

---

* For rigorous comparisons, best available 1220 MWe BWR project cost data have been used (see Section 4.11.9).

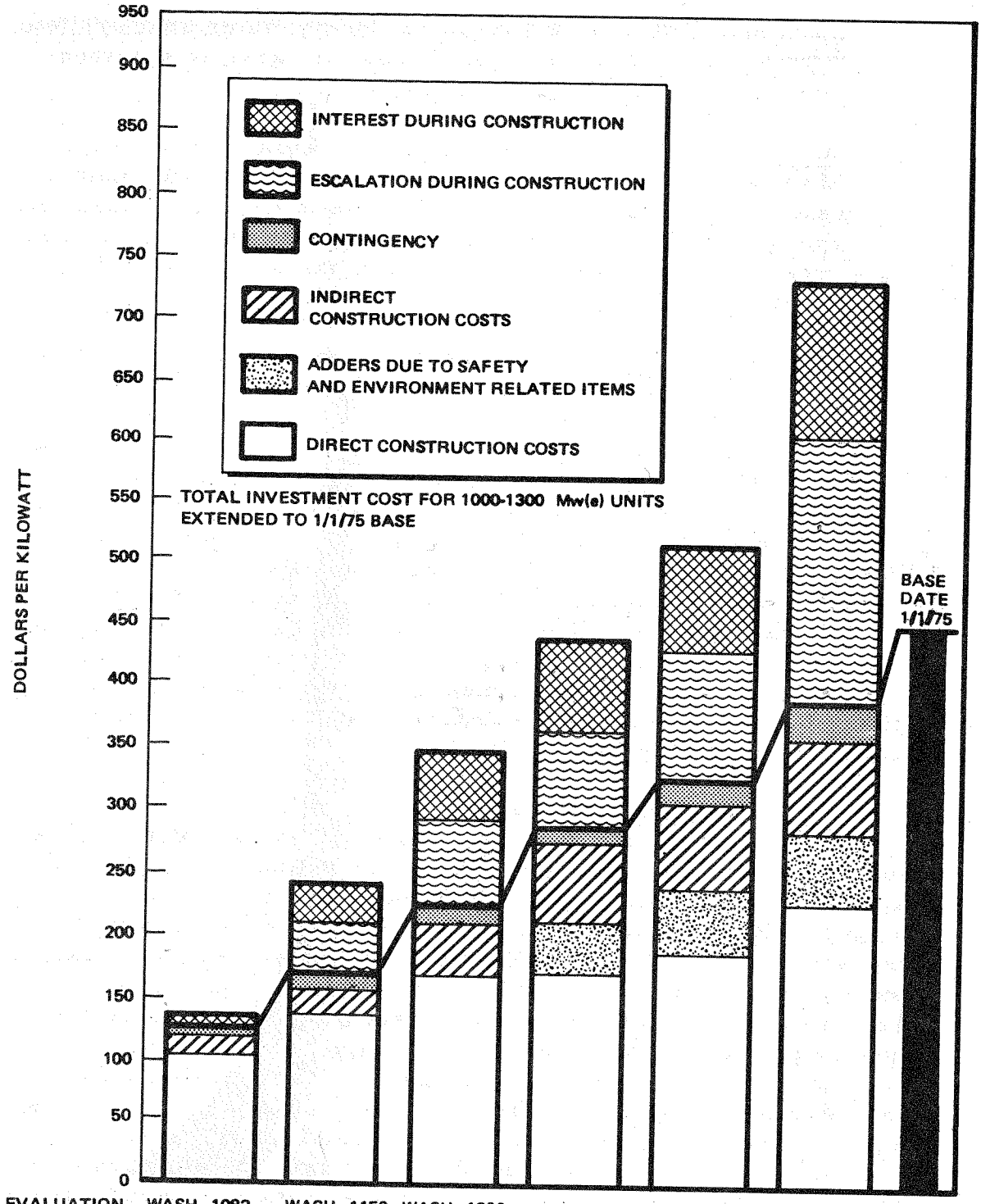

EVALUATION	WASH–1082	WASH–1150	WASH–1230	WASH–1230 REVISED	WASH–1230 REVISED	WASH–1230 REVISED	PRESENT STUDY
EXPERIENCE	MARCH 1967	JUNE 1969	JAN. 1971	JAN. 1973	JAN. 1973	JAN. 1973	
START-OF-PROJECT	MARCH 1967	JUNE 1969	JAN. 1971	JAN. 1971	JAN. 1973	MID–1974	
COMMERCIAL OPERATION	LATE 1972	MID–1975	JAN. 1978	JAN. 1978	JAN. 1981	JAN. 1983	

Figure 4-3 Relationship of Nuclear Plant Costs To Trend of Prior Estimates

4.2.3.7 SEPARATIVE WORK. A continuing availability of uranium enrichment services operated by the Energy Research and Development Agency (ERDA) at prices which will reflect increases in operating costs with time beyond $42.25/kgSWU (Separative Work Unit) as of the 1/1/75 base date.

4.2.3.8 URANIUM OXIDE FUEL FABRICATION. Competitive supply of uranium enriched UO_2 fuel available at a cost no higher than $112/kg$UO_2$ as of the 1/1/75 base date.

4.2.3.9 REPROCESSING. While costs of the order of $10 to $30/kg have been assumed in some earlier studies [1,12], a major cost increase to approximately $160/kg U is now considered in order and is used in this study for the case of a fully loaded privately owned 1500 MT/yr fuel recovery facility. This cost level is in 1/1/75 dollars and does not include provisions for transportation or waste disposal.

4.2.3.10 RECYCLED URANIUM VALUE. It is assumed that the recovered uranium from spent fuel reprocessing will be recycled even though it has a significant U-236 content. It is judged that this most likely will be intermixed with unirradiated uranium, thus diluting the negative reactivity effect of the U-236. Nevertheless the worth of the recycled uranium is assumed to be 60% of that of unirradiated uranium.

4.2.3.11 PLUTONIUM AND ITS FABRICATION. Somewhat lesser though still severe cost increases for fabrication of mixed plutonium uranium oxide fuel rods have been assumed relative to some earlier studies, i.e., a cost of $350/kg MO_2 (1/1/75 dollars) for a fully loaded facility in the size range 30-80 MT MO_2/yr coupled to a reprocessing facility, again without provision for transportation or waste disposal. This together with other LWR fuel cycle assumptions results in a break-even (indifference) plutonium value of approximately $4/g fissile Pu.

4.2.3.12 WASTE MATERIAL. A continuing and exclusive federal role in the storage of high activity and actinide waste materials is assumed. These wastes will be transported to a specially designated federal location not likely to be associated directly with either park or dispersed sites. The costs of this storage will be no greater than the equivalent of $130,000/tonne of spent fuel (4.0¢/MBtu) whether these wastes are in the form of processed or unprocessed fuel.

4.2.3.13 TRANSPORTATION. As yet these costs are not well defined for special nuclear materials due to the newly developing concerns regarding the magnitude of the diversion risk. In principle, a cost of up to $10,000 metric tonne of new or spent fuel is still not a significant burden to the nuclear fuel cycle--it translates into less than 0.4¢/MBtu and this cost level is assumed here (1/1/75 dollars).

4.2.3.14 SAFEGUARDS. Controls for reactors, reprocessing, fabrications, waste treatment, and transportation will be per 10CFR73 and associated Regulatory Guides. Spiking or denaturing of plutonium while presently under study by the Electric Power Research Institute (EPRI), General Electric Company, and others is not considered a viable alternative or an adequate safeguards response in the assumptions used for this assessment of parks vs. dispersed sites. The safeguards analysis contained in the LMFBR Environmental Statement (WASH-1535 December 1974) [14] is utilized as the most definitive data available at this time.

4.2.3.15 REGULATIONS. The current revisions of the various U.S. nuclear regulations (Title 10, Code of Federal Regulations), Regulatory Guides and pronouncements, together with state and local laws and regulations will be representative of the overall regulatory environment for the nuclear industry for the next several decades (see also Section 4.5.2.2).

4.2.3.16 CASES STUDIED. A full parameter study of possible combinations of fuel cycle facilities and numbers of generating units was simplified by selection of combinations of 4 unit, 6 unit and 20 unit parks and equivalent dispersed generation. These unit combinations were then grouped according to fuel facility configuration and mode of fuel cycle operations. Case number assignments are shown on the following Figure 4-4. X's represent illogical positions in the matrix. Blanks represent less important cases not uniquely covered in the present study.

4.2.3.17 CONSTRUCTION DATA. All specific data for construction analysis was based on available General Electric BWR/6 plant design information published in GESSAR [35] for a 1220 MWe unit and associated turbine plant data from the C. F. Braun SAR [36]. Cost and material quantity data were then normalized to a 1300 MWe net output for this study using the direct ratio 1300/1220.

NUCLEAR PARKS

MODE OF FUEL CYCLE OPERATION

	RECYCLE	BURNER	OPEN
FUEL STORED	X	X	4-UNIT (N4PO)* 20-UNIT (N20PO)
SEPARATE FACILITIES	—	—	X
INTEGRATED FACILITIES	—	—	X
INTEGRATED PARKS	4-UNIT (N4PC) 20-UNIT (N20PC)	4-UNIT (N4PD) 6-UNIT (N6PD) 20-UNIT (N20PD) 20-UNIT (N20PD)	X

DISPERSED NUCLEAR SITES

(PuB COUPLING)

FUEL STORAGE	X	X	2 x 2 UNITS (N4DO) 10 x 2 UNITS (N20DO*) 5 x 2 UNITS 7 x 2 UNITS 23 x 2 UNITS 40 x 2 UNITS
SEPARATE FACILITIES	2 x 2 UNIT (N4DA) 10 x 2 UNIT (N20DA)	—	X
INTEGRATED FACILITIES	2 x 2 UNIT (N4DB) 10 x 2 UNIT (N20DB)	—	X

*SEE TABLE 4-11 FOR CODE KEY

Figure 4-4 Parameter Coverage - Parks vs Dispersed Sites

4.2.4 Fuel Cycle Integration Alternates and Parks

Reference has been made to the launching theme of the nuclear industry. It was based on large centralized fuel facilities, on dispersed generation, on synergy between LWR and LMFBR and, of particular significance here, on reliable and in some cases expeditious shipment of various intermediates of the fuel cycle as necessary to integrate the entire complex. The theme is in many respects an idealized scenario as depicted schematically in Figure 4-5. The major sectors of the complex so depicted are: the HTGR fuel cycle relying on fissile U-235 from the mines or fissile Pu from the LWR cycle; the LWRs relying on the same fissile sources; and the LMFBR cycle relying in turn on the LWRs for initial plutonium supply.

Those portions of impending U.S. nuclear fuel cycles already at a substantial stage of implementation are separately identified, as are those portions for which it is judged there may be a significant Special Nuclear Materials safeguards risk (separated Pu or U_{233}, or U_{235} at over 20% enrichment). It should be noted that those stages of the cycle implemented in any magnitude to date are not judged to represent a significant safeguards vulnerability. Of the order of 5000 tons/year of low enriched uranium (2 to 5%) is currently being shipped of the order of 1000 miles from enrichment plant to conversion and fabrication facilities and then a similar distance to operational LWR. Relatively modest quantities (under 1000 tons total) have so far been shipped in their spent state on through to separate storage facilities; still less has progressed beyond the storage situation ($<$ 500 tons).

The picture up to this point, while developed for dispersed generation, is equally applicable to dispersed and to park type facilities. The two major differences that may emerge are:

1. Practicable scale of fuel processing and fabrication operations and consequent dollar economies.

2. Potential for integration and consequent lessening of transportation and safeguarding costs and risk. In the limit all fuel and generation facilities might be grouped at a few very large nuclear complexes. Such has been suggested (WASH-1288). As well as posing many problems of size, it does not really address the future of the present dispersed mode nuclear generation.

Progressive steps toward complete integration of the fuel cycle are shown in Figure 4-6. (Integration of the uranium enrichment

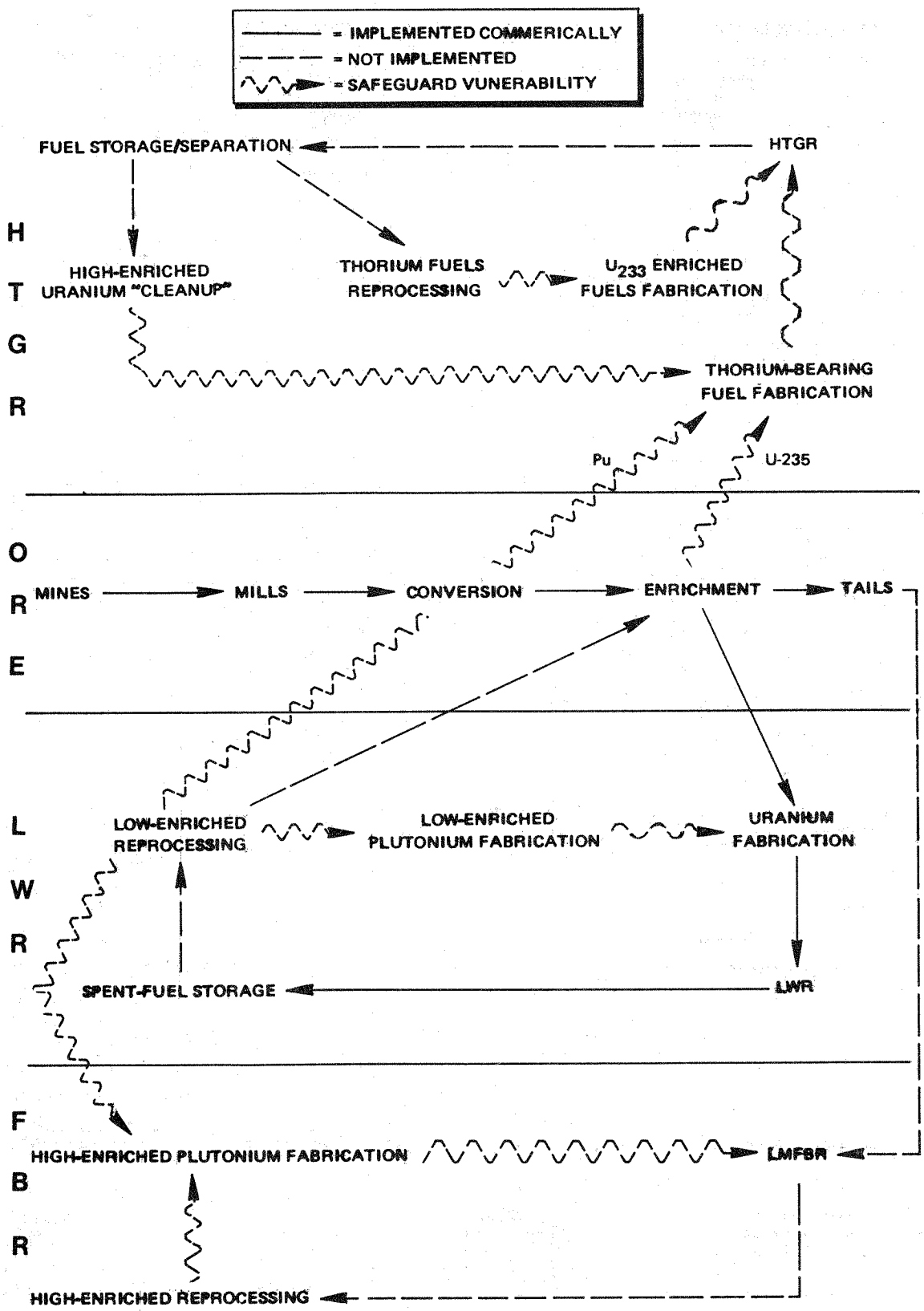

Figure 4-5 Impending U.S. Nuclear Fuel Cycles

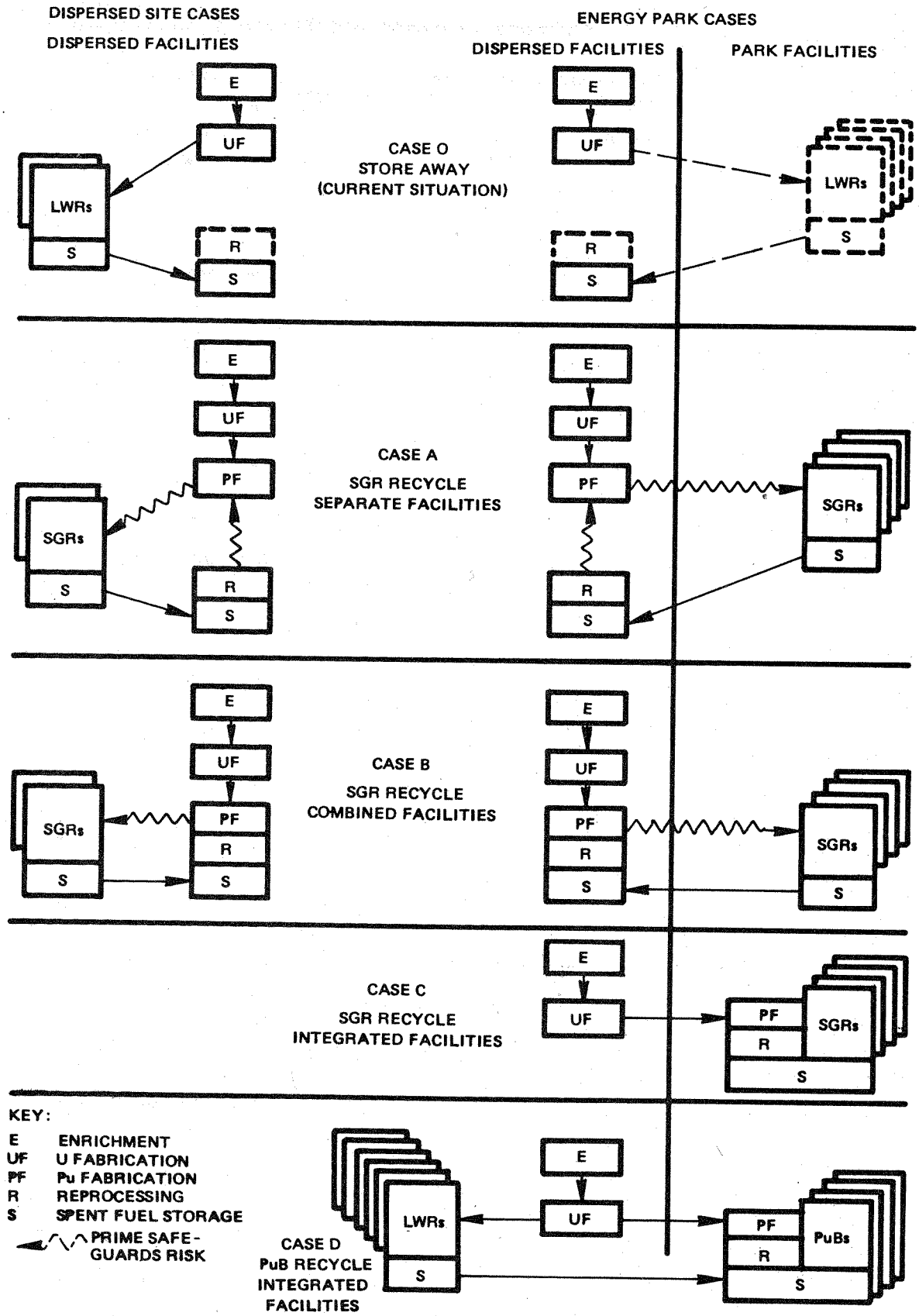

Figure 4-6 Fuel Cycle Integration Steps

process with a park is not called out in this sequence for LWR fuel cycle integration as it is not considered a significant safeguards risk. For the case of the HTGR or LWBR however such a case may be relevant and indeed not completely impractical, particularly with the development of centrifuge enrichment capability. An overall guide is that a 10 unit HTGR park coupled with possibly a 1000 MT SWU/yr plant might produce uranium with a separative work cost no higher than twice that of a large (9000 MT SWU/yr) competitive diffusion plant. Again, Figure 4-6 applies to both dispersed and to park sites. The cases are the same as discussed later with Nuclear Fuel Cycles.

Case O. The current storage mode is essentially free of materials safeguards risks for the case of the LWRs.

The introduction of parks can yield potential for economies in construction and operation but has essentially zero impact on the nuclear fuel cycle.

Case A. The self generated plutonium recycle mode is that described in the recent AEC (ERDA) GESMO document [12] and with it comes some identified safeguards risk associated with the plutonium recovery and recycle. Again the economics of the fuel cycle and the risk situation is essentially identical for parks and for dispersed siting unless one considers the safeguarding of a large multi-unit nuclear park to be a more practical proposition from an overall economics standpoint. This debatable point has been discarded in the present analysis.

Case B. The introduction of an integrated reprocessing and plutonium fabrication fuel cycle facility alternative represents a significant improvement to the plutonium safeguards and environmental risk aspects of the fuel cycle. It also yields certain cost economies through elimination of the need to convert plutonium nitrate to oxide for transportation to a fuel fabrication facility. Such an integration step is now being encouraged by various organizations in the nuclear field and again it is equally applicable to parks and dispersed sites. Some debate remains over safeguards and environmental risk associated with the transportation of refabricated plutonium bearing fuels.

Case C. Elimination of the transportation risk may be accomplished by combining power generation and integrated fuel cycle facilities. This step, however, suffers the following shortcomings:

- It is uniquely a parks type proposition and does not address to the future fueling of the present dispersed mode generation.

- It does not provide for potential future breeder reactor extraction of plutonium from the LWR fuel cycle.

- It implies:

  - Rather small and less economic fuel facilities, or

  - Large aggregation of LWRs in the park to fully utilize anticipated economic scale plutonium fuel and reprocessing facilities.

  - A substantial plutonium inventory on site to cover facility outage possibilities or, ability for external plutonium shipments on a contingency basis.

Case D. An alternative means of eliminating the more critical elements of the fuel transportation sector is the so-called dedicated plutonium burner or PuB park configuration. (The possibility still remains for contingency shipments of plutonium between sites when a key facility is shutdown.) The PuB concept is particularly interesting when considered in what is termed a reversed priorities mode of development: fuel storage, reprocessing, recycle.

Stage 1. In this alternate the presently committed dispersed nuclear power plants are served by centralized fuel storage facilities covering convenient geographical groupings.

Stage 2. Installation of an appropriately sized spent fuel reprocessing facility of about 500 MT/yr capacity for every 15,000 to 20,000 MWe served. This step would not be taken until such time as fuel cycle economics, i.e.:

- Mounting uranium or separative work prices, or
- Declining reprocessing costs, or
- Mounting value of recovered plutonium

were a sufficiently strong economic motivator in spite of associated risks and uncertainties.

This is not believed to be the situation today. Thus an initial stage of fuel storage is anticipated. As previously mentioned this is in distinct contrast to what has been envisaged by the nuclear industry up to this time. The $ impact of an interim storage mode is, however, modest (~4¢/MBtu) and does not significantly alter the near term economic incentive for the LWRs (Table 4-5). Unfortunately this is but a short term consideration, and it is not appropriate for either the HTGR or the breeder.

Table 4-5 LWR Fuel Cycle Costs With and Without Pu Recycle

COST COMPONENT	CONTRIBUTION TO COST (¢/MBtu)#			
	STORE AWAY	PLUTONIUM RECYCLE	PLUTONIUM SALES	
FRESH FUEL				
URANIUM ORE	12	8	12	6*
CONVERSION AND ENRICHMENT	10	7	10	6*
PLUTONIUM	-	2	-	-
FABRICATION	6	11	6	2*
SPENT FUEL				
STORAGE	4	-	-	-
SHIPMENT, REPROCESSING, WASTE STORAGE	-	6	6	1*
RECOVERED FISSILE CREDITS	-	(2)	(2)	(2)*
TOTALS	32	32	32	13*

#1975 DOLLARS, NO ESCALATION OF COSTS.
OTHER ASSUMPTIONS: EQUILIBRIUM CORE OPERATION AT 80% CAPACITY FACTOR, 0.25 W/O TAILS, 8% INTEREST AND PRESENT WORTH FACTOR, 16% FIXED CHARGE RATE, UNESCALATED.

*USING 1971 ESTIMATED COSTS FROM REFERENCE 1, Pu VALUE $7/g VS. PRESENTLY ASSUMED $4/g FISSILE.

Stage 3. A third and final step in this reversed priorities sequence for the PuB parks would then be the decision to recycle recovered plutonium and thus to initiate installation of both plutonium fuel fabrication facilities and dedicated plutonium burner reactors on the PuB site. This decision could follow some several years later, again dependent on the balance of economic pressures vs. the risks and uncertainties of recycle. For the present study it has been assumed that LWR recycle for the plutonium would ultimately be implemented but many options exist as summarized in Table 4-6 and these can well await the evolving situation at the time.

Given this Case D PuB park concept with some option as to the timing on which fuel recovery and plutonium recycle is implemented, the question becomes, what are the pressures which will influence that timing, i.e.:

LWR fuel storage pressures
Uranium supply pressures
Fissile material separations pressure

Related to this are the questions (1) what is the transient facility growth situation at a PuB park and (2) what scope exists for recycle from existing dispersed facilities into dedicated onsite LWR burners? Furthermore, how does this couple to offsite capacity and what size installations are optimum?

Presently most of the accumulated spent fuel from U.S. light water reactors is in storage pools at existing dispersed sites. This storage capacity totals nearly 4000 tons or approximately 2 yrs discharge from presently operating reactors. Existing storage at Morris, Barnwell and West Valley might accommodate a further 1500 tons. Plans are now being formulated for limited further additions relative to a discharge rate of possibly 3000 tons/yr by the mid 1980's from some 130,000 MWe of committed LWRs.

By comparison a single 4-unit PuB park with an associated 500 ton/yr recovery facility might work off approximately 1500 tons of stored LWR fuel as well as continuing to handle some 300 tons/yr of spent fuel discharge from approximately 12,000 MWe of associated dispersed sites. This then is illustrative of one form of coupling between dispersed sites and a PuB park. It would imply need for an early start on some fifteen 4-unit PuB parks, or possibly three 20-unit PuB parks, to be in recovery mode operation by the mid 1980's if the discharged fuel from the nation's present program of dispersed LWR installations were to be accommodated and the plutonium utilized

Table 4-6 Plutonium Utilization Options - Parks vs. Dispersed Sites

ACTION	PRIME CONSIDERATIONS
• NONE - HOLD IN SPENT FUEL STORAGE FOR INTERIM	STORAGE QUESTION - CENTRALIZED PARK STORAGE A POSSIBILITY - LOCATION FOR ULTIMATE RECOVERY
• IMMEDIATE RECOVERY AND RECYCLE IN ALL LWR FUEL	VERY EFFICIENT Pu USE (PEUCHL PROPOSAL) FABRICATION COST PENALTIES, SAFEGUARDS? PARK CONCEPT OF NO INFLUENCE
• IMMEDIATE RECOVERY AND SGR TYPE RECYCLE	GESMO BASIS, SOME ECONOMIC PROMISE, SAFEGUARDS? PARK CONCEPT OF NO INFLUENCE
• DELAYED RECOVERY AND CONCENTRATED RECYCLE IN DEDICATED Pu BURNER LWRs	LESS EFFICIENT Pu USE, LESSER FABRICATION PENALTY, LWR DESIGN PROBLEMS, STORAGE? APPLICABLE TO PuB PARK CONCEPT
• DELAYED RECOVERY AND RECYCLE IN THORIUM SYSTEMS	EFFICIENT Pu USE (PROF. T. PIGFORD PROPOSAL) MINIMIZES HIGHER Pu ISOTOPE PRODUCTION & ALPHA BURDEN? POTENTIAL HTGR USE, LWBR, ETC., PuB PARK POTENTIAL.
• DELAYED RECOVERY AND USE IN URANIUM BREEDER SYSTEM.	MOST EFFICIENT Pu USE (ORIGINAL INDUSTRY THEME), INTERIM STORAGE REQUIREMENT, PuB PARK POTENTIAL.

promptly in dedicated LWR recycle. Under this circumstance, the first dedicated plutonium burning LWR would actually start up some six years later as suggested in the Reprocessing portion of Figure 4-7 where Open-Cycle Discharge precedes PuB Discharge reprocessing.

Alternatives exist in which further extension of the fuel storage interval occurs with a consequent requirement for accelerated introduction of PuB facilities or their equivalent (LMFBR or other plutonium consumers) as shown in Figure 4-8 and discussed further in Section 4.4 on Nuclear Fuel Cycles.

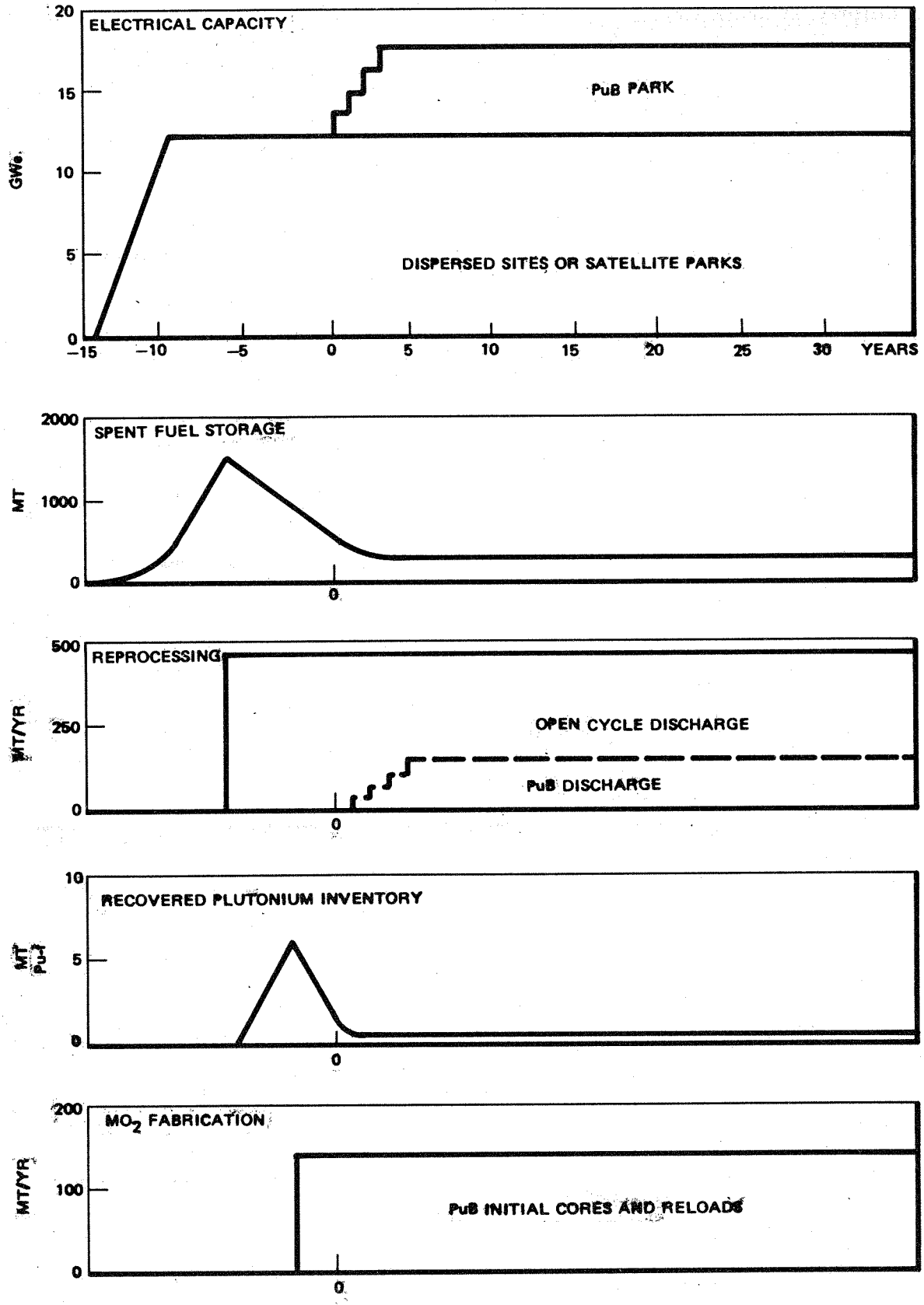

Figure 4-7 Fuel Cycle Transient in a 4-Unit PuB Park (Case N4PD)

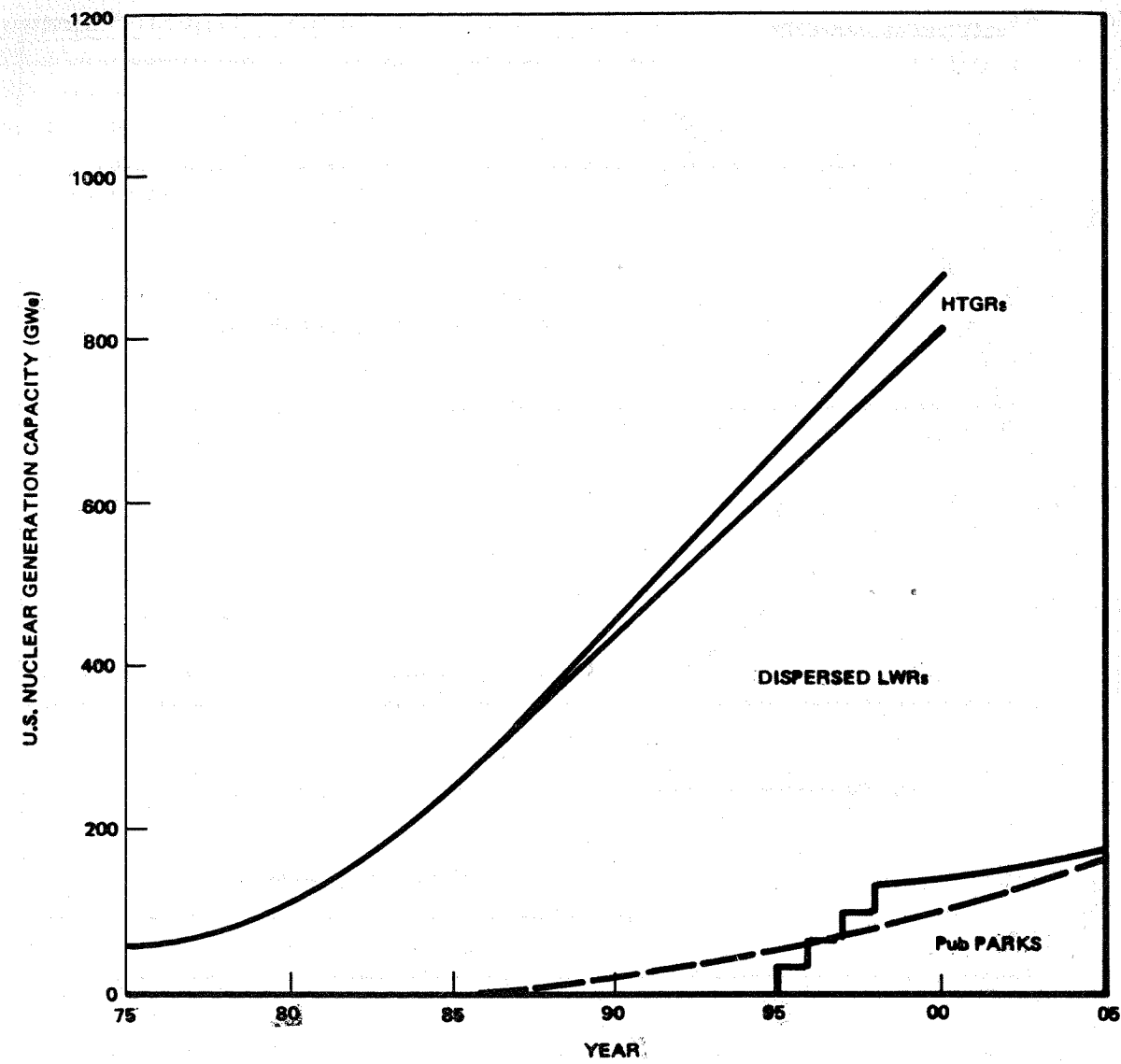

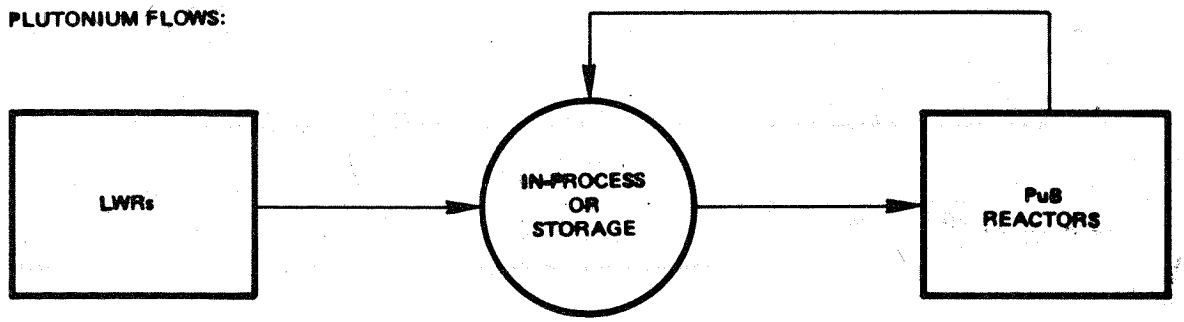

Figure 4-8 Alternatives For Introduction of PuBs

4.2.5 The Nuclear Industry and Its Trends Without Parks (Dispersed Mode Expansion)

The nuclear industry has the characteristics of a very long cycle undertaking. While initiated in the mid 1950's and now reporting more than 220 units sold in the U.S., there are presently some 40 of these or 6% of total U.S. electrical generation in operation. The balance, all dispersed site units, are in various stages of design, construction and start-up (Figure 4-9). This backlog represents approximately $1.5 trillion of construction commitment by the industry. A major additional investment also exists in supply industry infrastructure, particularly for mechanical components and fuel. The cycle length is further demonstrated by the fact that while core power densities, fuel burnups and many other design parameters have progressed rapidly over the last 20 years, the last 10 years of this design progress has yet to be proven out in full scale plant operations. Indeed as previously discussed the back-end of the fuel cycle is not yet closed and completion of well in excess of $1 billion of facilities is needed to look after these present commitments.

The consequence of the above is that the industry is now starting to enter a phase of maturity following this 20 year period of rapid development. Standardization and feedback from operating plants is now becoming the most significant factor. Further major developments or changes in approach are less likely, in view of the major commitments to get the industry to the present state; sudden significant changes in approach are not expected. Indeed such is probably beyond available resources of the industry. Thus a more gradual evolution is in view. Candidates for such evolution include:

- Possible gradual size increase
- Incremental introduction of Pu recycle
- Gradual design revision based on operational feedback to increase reliability
- Limited introduction of improved construction techniques

These circumstances and resource constraints also cause some significant uncertainties on the rate of introduction of HTGRs and LMFBRs and leave questions as to any meaningful role for other advanced systems.

It is anticipated that in the absence of major changes from the present trends the future course of the industry will be much as outlined in Table 4-7.

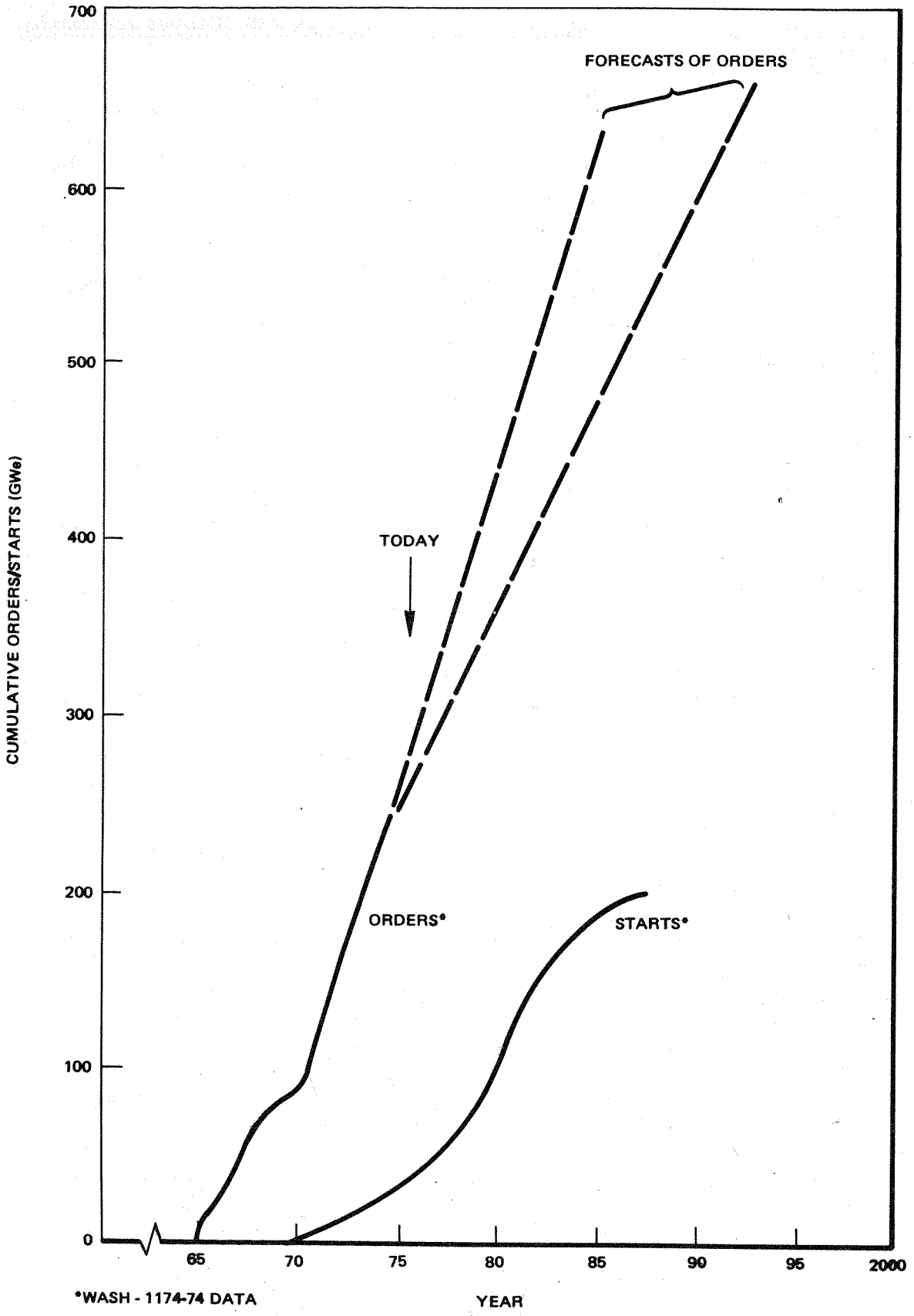

Figure 4-9 U.S. LWR Installation Trends

Table 4-7 Anticipated Future Trend of Present U.S. Nuclear Programs

- UNITS ON LINE WILL GROW FROM 1975 TOTAL OF 40 (38,000 MWe) TO 200 (190,000 MWe) BY THE LATE 1980'S.
- NUCLEAR ORDERS WILL PICKUP BASED ON
  - ENERGY CRUNCH

    FAVORABLE LWR PERFORMANCE

  THUS YIELDING

  ∿ 30 UNITS/YR ORDERED 1980 THRU 2000 MOSTLY 2 AND 4 UNIT SITES

  POSSIBLE DESIGNATION ∿ 200 NEW U.S. SITE LOCATIONS
- CONSTRUCTION COST RISE WILL CONTINUE
  - PACING OVERALL ESCALATION RATES
  - NO MAJOR CONSTRUCTION BREAK THRUS
  - NO MAJOR UNIT SIZE INCREASE
  - U.S. NUCLEAR CONSTRUCTION LABOR FORCE OF 200,000 REQUIRED
- FUEL CYCLE BACK END DEVELOPMENT SLOW
  - REGULATORY
  - ENVIRONMENTAL
  - SAFEGUARDS

  } MAJOR PRESSURES

  TEN-YEAR DELAY OF FURTHER FUEL RECOVERY FACILITIES POSSIBLE.

  SIMILAR OR GREATER DELAY ON PLUTONIUM FABRICATION.

  EXTENSION OF LOCAL FUEL STORAGE REQUIRED AS TEMPORARY EXPEDIENT.

  URANIUM AND SEPARATIVE WORK REQUIREMENTS OF GIVEN LWR ULTIMATELY BOOSTED 200% AND 50% RESPECTIVELY.

4.2.6 Possible Improvement of Nuclear Plant Construction Through Parks

Reference has been made to the required increases in nuclear plant costs (Figure 4-3). This rise has exceeded the overall rise in construction industry indices by a factor of at least 50% over the past 10 years. The future trend is uncertain. Nuclear parks through their potential opportunity to permit more standardization, more construction labor stability and possible sizable site investment for a supermodule type approach to construction have been suggested as a possible counter to the current industry cost problem.

Review of the cost makeup of a typical nuclear plant (Figure 4-10) suggests construction labor to be one of the biggest potential areas for improvement. It has grown from an all-time low of approximately 6 to 7 man-hours/kWe to as much as 12 to 14 mh/kWe over the last 10 years. At the same time $/man-hour have grown from $7 to approaching $20 with full overheads, before escalation. In principle all cost sectors save for site materials and component supply might be reduced in cost through improved construction techniques, particularly if means can be developed to improve working conditions and improve scope for learning curve improvements through repetition and standardization. This then is the objective of the present modular field construction studies.*

In concept the supermodule approach evolves around a major investment in pre-assembly areas at or adjacent to the construction site and in heavy lift capacity to move the proposed supermodules, much as is done in the newer large shipyards for supertankers etc. This is less readily accomplished in nuclear plants because:

- A limited number are normally fabricated at one location thus limiting site facilities investments.
- Nuclear plants are normally constructed with massive amounts of reinforced concrete structures and shielding which tend to make major module lifts too burdensome.
- The extensiveness of piping systems, services, instrumentation etc. throughout the structures result in major startup testing requirements particularly if many smaller modules are used.

---

* A significant level of standardization has been achieved already in the component or equipment sector even though multiple sites are involved.

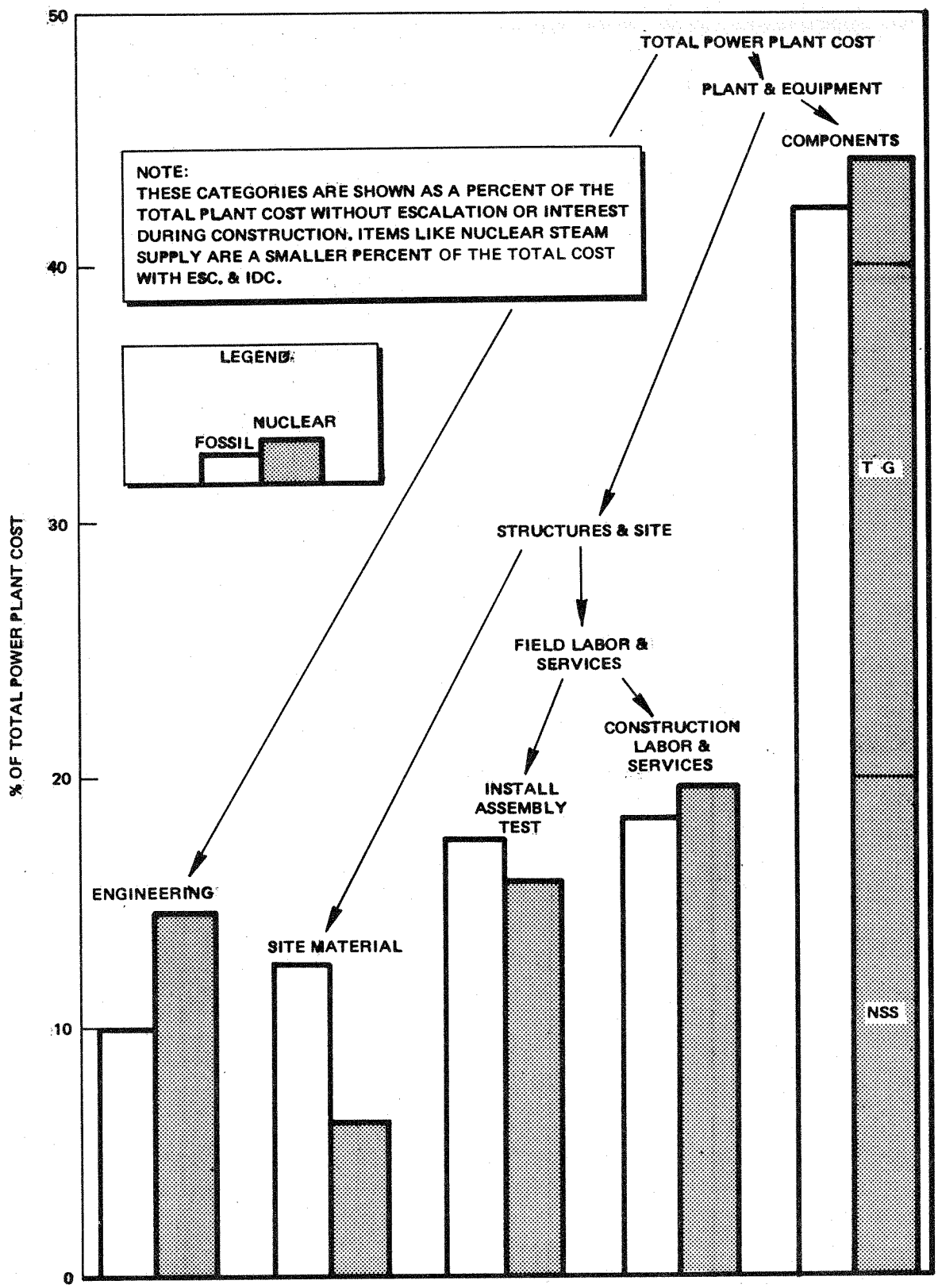

Figure 4-10 Costs of Typical Nuclear Power Plant

Two approaches were investigated in this study:

1. A concrete supermodule method in which major concrete structural modules, made in a separate factory area, are installed in the plant, interspersed with major equipment modules being installed as their rooms are thus formed.

2. A steel/water supermodule approach in which major steel structural/shielding modules, made and largely equipped in a separate factory area, are installed in the plant and when all interconnection and finish work is essentially complete, are finally filled with water for radiation shielding.

In both cases a 1000 ton gantry crane with ability to straddle the full nuclear island or turbine building is assumed (Figure 4-11). The investment in this lifting capability alone may be in excess of $15 million and the total investment in the onsite assembly facilities some $60 to 100 million. The details and evaluation of the modular construction techniques (Figure 4-12) are covered later in Section 4.11, Power Plant Costs and Improved Construction.

Findings from these studies suggest

1. The two-part equipment and concrete modules (Figure 4-12) are a more directly attainable step than the steel and water approach.

2. Through such a modular approach major labor productivity improvements should be attainable based on experience in other industries.

3. Significant construction schedule improvements should be attainable as a result of avoidance of the concentration of construction and assembly activities in the cramped quarters of a nuclear installation with all containment, shield walls etc. in place.

Together these considerations are estimated to result in a 20 unit construction cost differential before escalation of as much as $3. billion between multiple unit installations at dispersed sites and a modularly constructed park complex (Figure 4-13). As much as 50% of the field work may be moved into the module assembly shops and an overall man-hour reduction of nearly 30% may be achieved due to lesser congestion onsite and the basic boost in productivity of shop versus field activities.

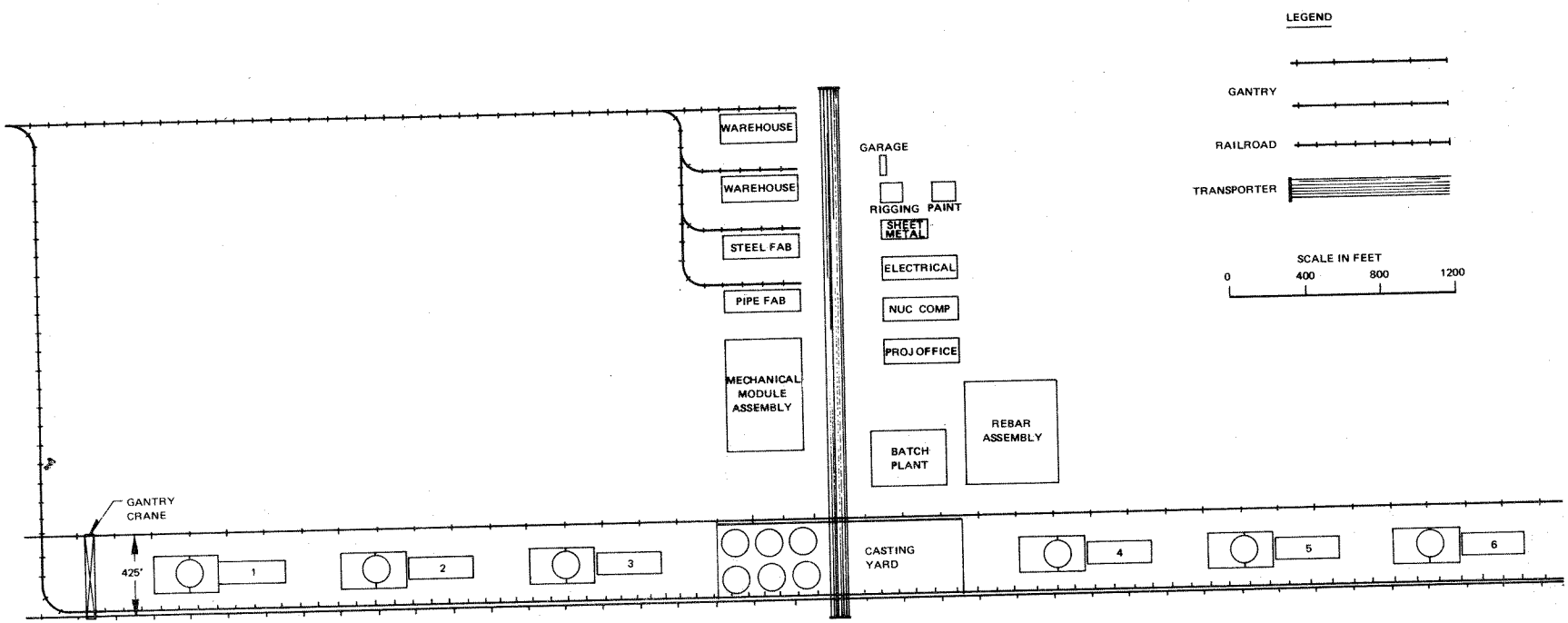

Figure 4-11 Typical Modular Construction Site Layout

Step 1. Install and anchor the reactor pedestal-weir wall steel frame (Module 1). Erect formwork and install reinforcement for shield building wall (below grade).

STARTING POINT OF SEQUENCE

A. Reactor building foundation mat poured (5700 yds^3)
B. Lowest course of containment in place and anchored (400 tons)
C. Floor liner plates
D Structure foundation plates
E. Reinforcing bar dowels for shield building walls

} Cast in place (170 tons)

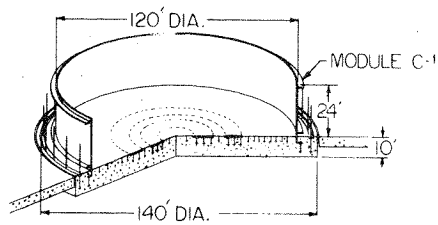

IN PLACE WEIGHT-11970 TONS.

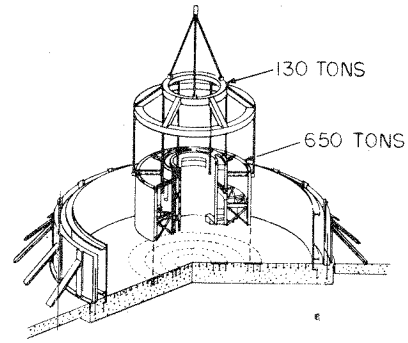

Step 2. Pump in and compact all concrete for the reactor pedestal-weir wall and drywell floors, and for shield building foundation wall. Prepare reactor vessel assembly (Module 2) for installation.

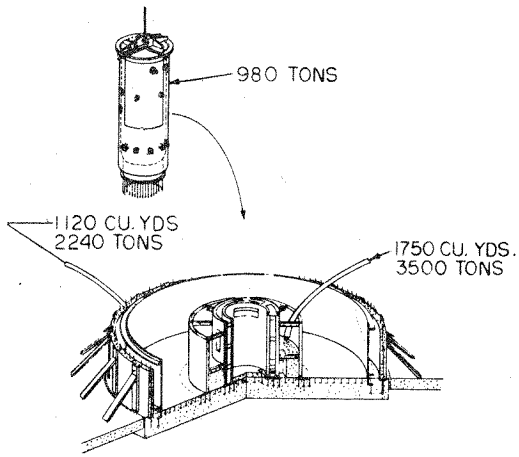

IN PLACE WEIGHT-18360 TONS

Step 3. Install and anchor reactor vessel assembly (Module 2) and prepare the reactor shield wall (Module 3) for installation.
Begin installation of substructure modules for adjacent buildings.

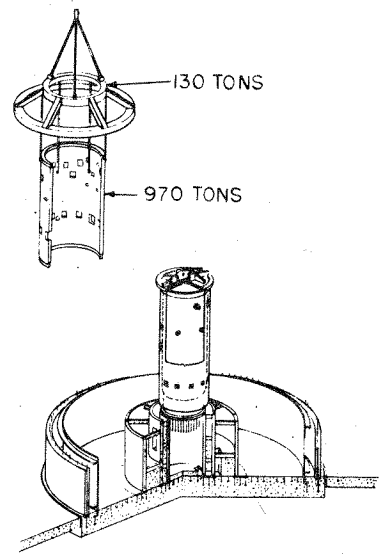

IN PLACE WEIGHT-19340 TONS

Figure 4-12 Typical Modular Construction Sequence Start

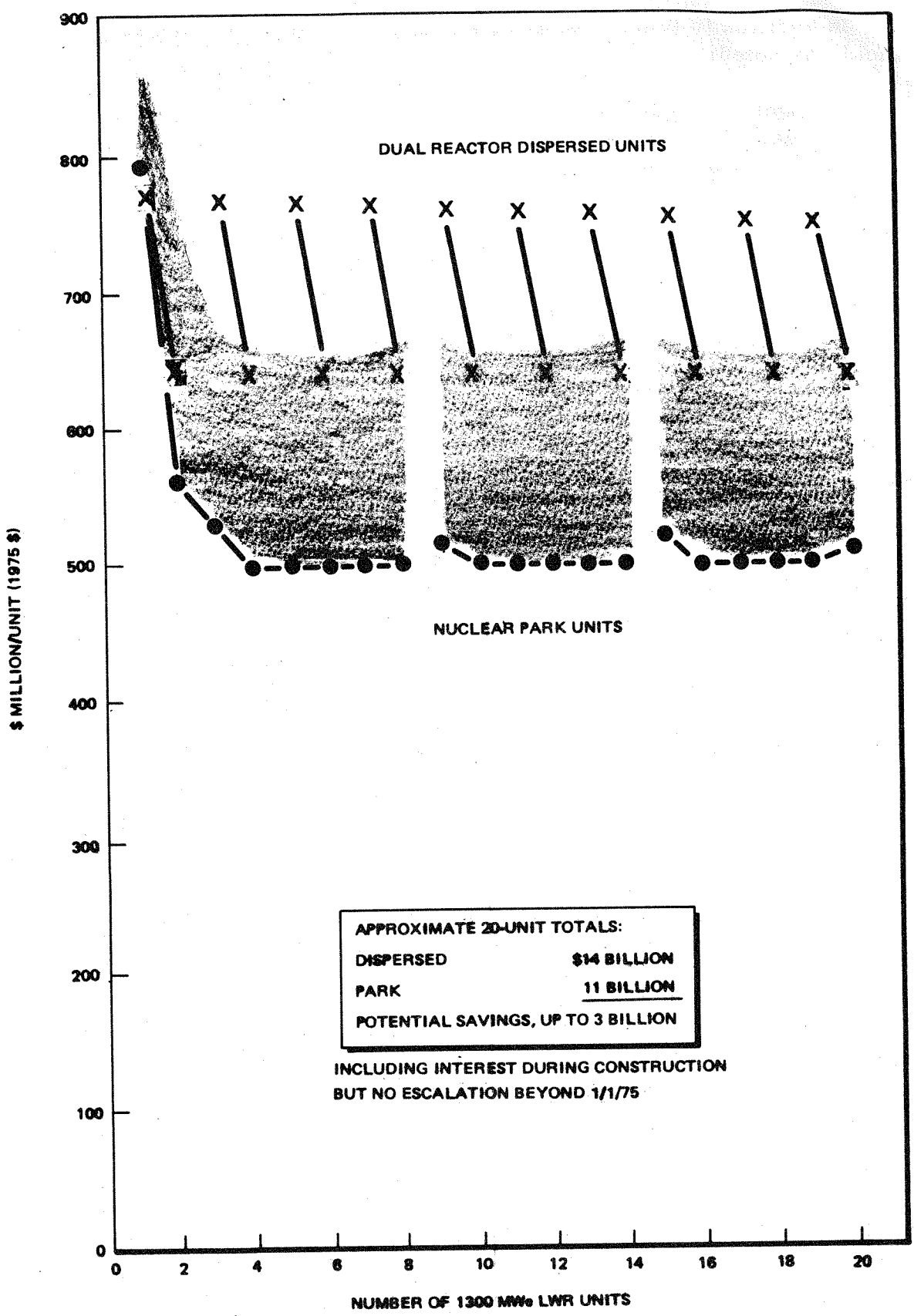

Figure 4-13 Construction Cost Comparison - Park vs Dispersed Generation

In addition to these positive findings, however, the following should be noted:

1. Only a limited study (~ 1 man-year) has been conducted to date - sufficient only to confirm principles, and thus an uncertainty band relative to dispersed site costs of as much as +20%, -5% is believed appropriate.

2. The onsite facilities investment requirement appears to be substantial, and as such is a major front end risk item for the customer at the time of initiation of the improved construction approach.

3. The need for standardization through the period of construction of a large series of units, 10-15 years or more, may well be impractical to achieve, at least in the near future, and without some basic restructuring of the industry.

4.2.7 Remaining Uncertainties and the Future for Parks vs. Dispersed Generation

The present study has identified aspects of both the fuel cycle and power plant construction itself that evidence potential benefit from the planned introduction of integrated fuel cycle or park type nuclear facilities. Nevertheless uncertainties remain, many of which relate to the fact that the study was conducted for general U.S. conditions and thus encompasses generic considerations:

- It is not site or situation specific and many of the more qualitative environmental and social issues have not been fully evaluated.

- Fuel cycle benefits have been identified as largely related to the materials safeguards issue and yet at this point the transportation costs with adequate safeguards for discrete dispersed sites or with specific circumstances of colocated fuel processing and plutonium fabrication are not available as a well defined alternate.

- Potential construction cost benefits possible through large parks, while identified in principle, appear to require a somewhat unique environment of design and regulation stability not characteristic of most of the U.S. electric utility industry at this time. While lesser economies are possible for smaller parks, these have not been defined as yet.

In addition to the above site-related factors, a number of other specific regulatory and technical issues basic to the comparison of parks with dispersed generation remain subject to some uncertainty:

- The finalization of ALAP regulations and their impact on the ability to adequately handle effluents from a large park.

- The ability of LWR designs to be modified to a dedicated plutonium burner role for PuB parks.

- The use of denaturing as an adequate safeguarding technique for plutonium fuels transportation.

- Accurate definition of the unit cost of recovery and plutonium fabrication as a function of throughput such as to permit more rigorous evaluation of optimum park size or, alternatively, the fuel cost penalties of very small parks.

- The specific manpower and materials comparisons, module by module throughout an LWR plant versus lifting capacity etc. that will permit a rigorous evaluation of the extent to which construction savings might be pursued for maximum economy in park construction.

- The definition of systems technology advances beyond the LWR, i.e. HTGR, LMFBR, LWBR, molten salt breeder, to the point where rigorous judgments can be made on the timing and extent to which they might utilize LWR plutonium preferentially.

- The outcome of both the GESMO hearings and the NRC nuclear energy park site survey.

- The compatibility with existing nuclear industry and business structure and with associated supply facilities in place and planned.

Given the preceding conclusions as to the potential merits of parks, the identified logic of the specific PuB park development in conjunction with existing dispersed generation, and the above listed remaining areas of uncertainty, the following future program thinking has been scoped out (see Figure 4-14).

1. Data Review and Utility Industry Survey. In close cooperation with the U.S. electric utility industry and the responsible State and Federal Agencies, develop a critique of the current report with particular reference to:

- Its relevance to past, existing or planned regional or site specific studies for the given entity.

- Any major conflicts regarding fuel cycle integration incentives, limited worth of early plutonium recycle, construction economy thru modularization, etc.

- Timing of efforts toward development of nuclear facility integration based on local land use planning, facility growth projection, state and local regulatory authority plans.

Based on the above critiques by a representative array of public and private utilities and their regulators, confirm or revise the above noted key IFCF/park/dispersed site areas of uncertainty and the incentives for their solution including construction cost reduction through modularization.

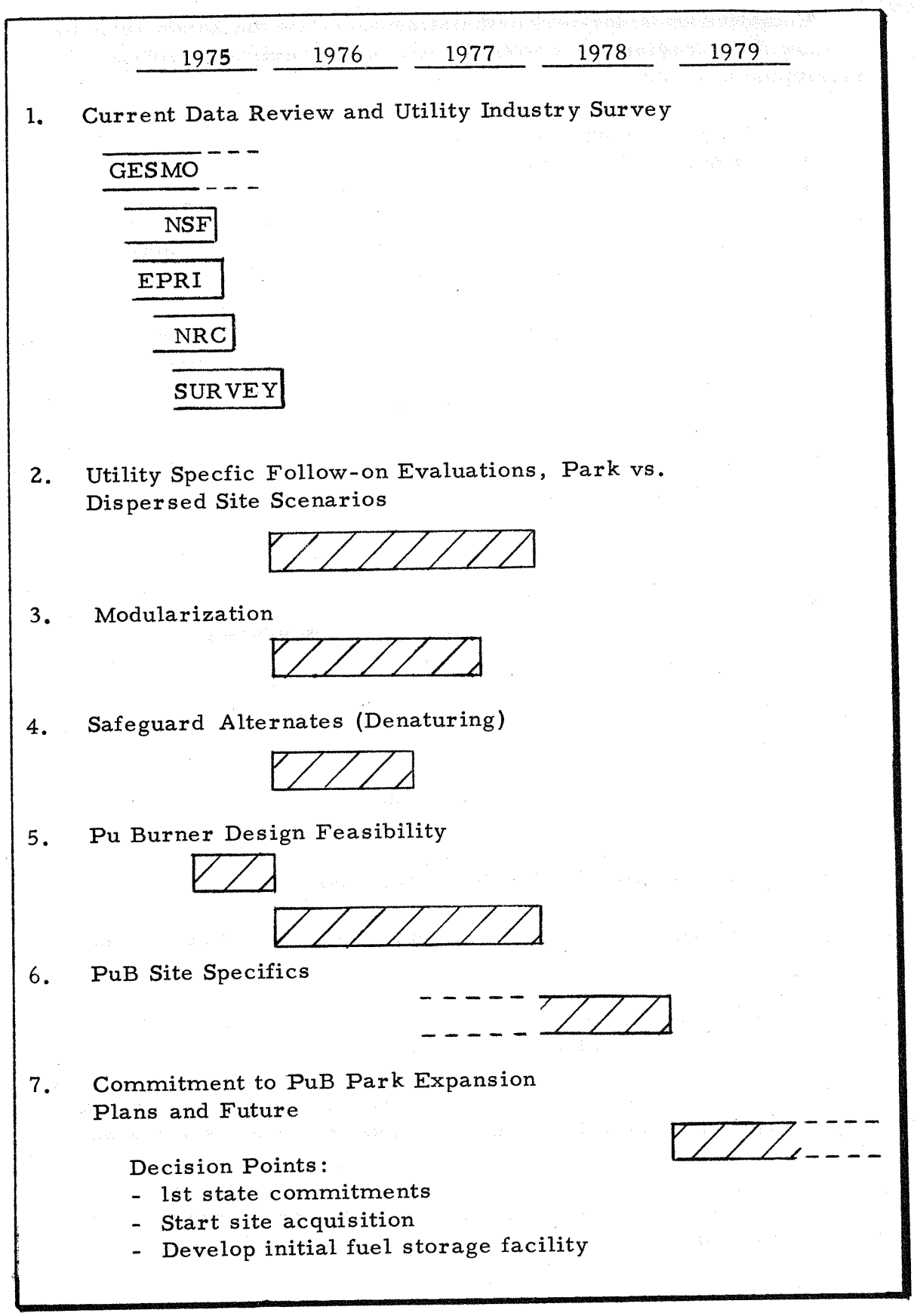

Figure 4-14 Suggested Future Program Schedule

Establish an order of merit listing based on the above critique to show those regions in which the greatest incentive for IFCF/park development exist:

- Furthest along in current studies?
- Highest intensity of fuel shipments?
- Biggest problems of escalating labor costs?
- Best availability of land suitable for IFCF/park sites?
- Most suitable transmission and load center disposition?
- Most favorable financing/PUC situation?

2. Follow-on Utility-Specific Evaluations. Encourage the establishment of further parallel evaluations as defined below (item a through item g) by those utilities or group of utilities for which maximum IFCF/park promise has been identified.

Model these evaluations where possible and as appropriate on the efforts already in process by the Pennsylvania Group of utilities.

Establish two basic scenarios for each follow-on evaluation:

- Continued dispersed generation with independent large co-located fuel storage, reprocessing and plutonium fabrication centers.

- Optimum coupling of dispersed and minimum size (4 unit?) PuB park facilities.

These scenarios should be prepared with:

(a) All specific sites and ratings to be committed through year 2000 identified for the dispersed case.

(b) Alternative dispersed plus PuB groupings defined to the same level as (a).

(c) Fuel material shipments, mileage and inventories defined for the above situations (a) and (b).

(d) Site development costs, potential facilities ownership and ultimate generation and transmission costs for situations (a) and (b).

(e) Comparative environmental and safeguards assessments for (a) and (b).

(f) An assessment of scope for redirection or modification of facilities to provide flexibility with time for (a) and (b).

(g) An order of merit listing of the most problematic specific dispersed site situations or regions from (a) (d) and (e) and of the most promising PuB - dispersed site groupings from the same standpoint.

This work might be conducted most appropriately during CY1976-77.

3. Modularization - Study in Depth. Further to the work of this report it is understood that NRC is sponsoring a "study effort on the construction rate of nuclear power plants at energy centers...." (Request For Proposal No. RS-75-6). Presumably this work would provide additional background information in support of the above proposed utility - specific evaluations (2). A study in depth for one or more of the highest incentive specific utility situations as determined from (1) would then be a logical follow-on. Through it the previously noted specific manpower and materials comparisons, module by module, versus available lifting capacity might be defined as a basis for the overall cost comparison programs.

4. Safeguards Alternate - Denaturing. In parallel with item 2, conduct rigorous analysis/review of the potential offered by denaturing techniques for plutonium fuels transportation such as presently being explored by the Electric Power Research Institute (EPRI). Define specific shipping requirements, safeguards fault analyses, and overall costs and remaining risk factors sufficient for rigorous comparison with PuB park safeguards risk factors.

5. Plutonium Burner Design Feasibility. In parallel with items 2 and 3, also institute further design studies of dedicated LWR plutonium burner configurations by LWR suppliers to ensure that such units can be built to meet all necessary industry safety and control requirements and to better define the operational characteristics and costs of such units.

6. PuB Site Specifics. Based on item 2 findings, initiate in-depth design study activities on the most promising PuB park - dispersed site groupings by the affected utilities, their suppliers and the regulators, these studies to be in sufficient depth to provide bases for:

- Commitments to procure necessary sites
- Commitments to relocate some generation to designated PuB sites from possibly previously planned dispersed locations

- Review and decision on ownership of PuB generations and fuel cycle facilities, and the form of coordination and financial ties with dispersed units

- Commitments to initiate detailed PuB park facilities construction projects

This work might be conducted most appropriately during CY 1978 yielding a year-end series of PuB park generation expansion plans, if indeed the preceding findings so indicate.

7. PuB Commitments (See Figure 4-14.)

Subchapter Contents

		Page No.
4.3	NUCLEAR POWER REACTORS	4-48
4.3.1	Light Water Reactors	4-48
4.3.1.1	PARK VS DISPERSED SITE CANDIDATES	4-48
4.3.1.2	BOILING WATER REACTOR	4-52
4.3.1.3	PRESSURIZED WATER REACTOR	4-52
4.3.2	High Temperature Gas-Cooled Reactor	4-54
4.3.3	Liquid Metal-Cooled Fast-Neutron Reactor	4-54
4.3.3.1	U.S. DEMONSTRATION FBR POWER PLANT	4-54
4.3.3.2	LMFBR FUEL CYCLE INTEGRATION AND BREEDER PARKS	4-55
4.3.3.3	LMFBR DOUBLING TIME CHARACTERISTICS	4-56

4.3 NUCLEAR POWER REACTORS

4.3.1 Light Water Reactors (LWR)

4.3.1.1 PARK VS. DISPERSED SITE CANDIDATES. Projected nuclear power growth in the next 25 years is forecast[2] to be largely through light water reactors, with some additions of HTGRs and potentially LMFBRs. These then are considered the candidate reactors for the evaluation of dispersed vs energy park power generation. Illustrations of a BWR, a PWR, and HTGR, and an LMFBR are shown in Figure 4-15.

Currently BWR and PWR power plants of approximately 700 to 1300 MWe, using reactors up to 3800 MWt, are being constructed. In the United States, plants larger than 3800 MWt are not being licensed until several years experience is gained with this size (see box). With present LWR plant thermal efficiencies and in-house power loads, 3800 MWt yields about 1300 MWe. Larger LWR plants of 1500, 2000, and 2500 MWe are feasible, with appropriate turbine generator arrangements, and scope designs have been prepared by the various plant suppliers. Similar scope exists for increased size HTGR and LMFBR plants.

Extract from

U.S. ATOMIC ENERGY COMMISSION

REGULATORY GUIDE 1.49

Revision 1
December 1973

In a statement issued on March 5, 1973, announcing its nuclear plant standardization policy, the Commission stated that the size of all new plants accepted for licensing review (both those proposed for review as standardized plants and those proposed for review in connection with a specific application for a construction permit) would be subject to a maximum power limit.[1]

This guide describes acceptable maximum power levels for all nuclear power plants.

C. REGULATORY POSITION

1. The proposed licensed power level of all nuclear power plants for which a construction permit application is filed pursuant to Section 50.34 of 10 CFR Part 50 should be limited to a reactor core power level of 3800 megawatts thermal or less until January 1, 1979, at the earliest.

2. Analyses and evaluation in support of the application should be made at an assumed core power level equal to 1.02 times the proposed licensed power level (with a maximum acceptable value of 1.02 times 3800, or 3876 megawatts thermal) for (a) normal operating conditions, (b) transient conditions anticipated during the life of the facility such as load changes, control rod malfunctions and improper operations, loss of forced coolant flow, loss of load or turbine trip, loss of normal a-c power, primary system depressurization, etc., and (c) accident conditions necessary to evaluate the adequacy of structures, systems, and components provided for the prevention of accidents and the mitigation of the consequences of accidents.

3. Analyses of the possible offsite radiological consequences of postulated design-basis accidents made to demonstrate acceptability of the site in accordance with 10 CFR Part 100 should be performed for an assumed core power level equal to 1.02 times the proposed licensed power level or may, at an applicant's discretion, be made at a higher power level, not to exceed 4100 megawatts thermal. Analyses made at an assumed core power level greater than 1.02 times the proposed licensed power level should be regarded as supporting operation of the facility at a proposed licensed core power level no greater than 3800 megawatts thermal.

No changes in the basic design of the light water reactors themselves are required for nuclear park application at this time. Both park and dispersed LWR may increase the amount of Pu in recycle fuel, perhaps with minimal changes in the core or reactivity control, until they become self-generating reactors (SGR) in which the fissile Pu recovered from fertile U and Pu in the fuel equals or exceeds the fissile Pu burned. The SGR mode occurs with about 40% mixed oxide (MO_2) fuel in the reloads, and may be increased somewhat more (e.g., 1.15 SGR) before substantial reactor changes would be necessary[12]. In the

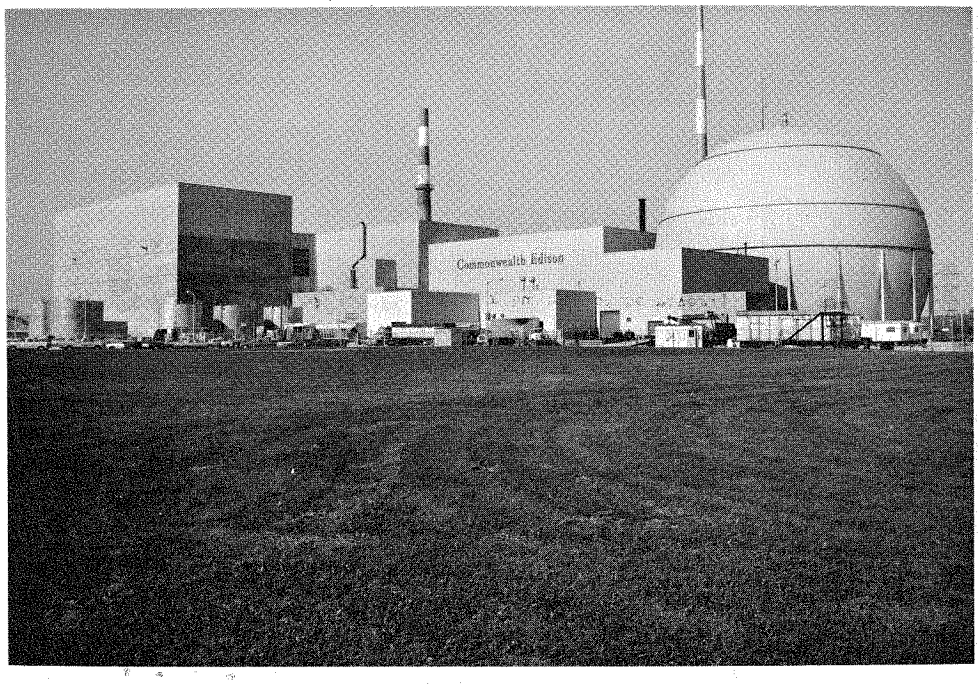

DRESDEN 1, 2, 3 BWRs - Commonwealth Edison Co.

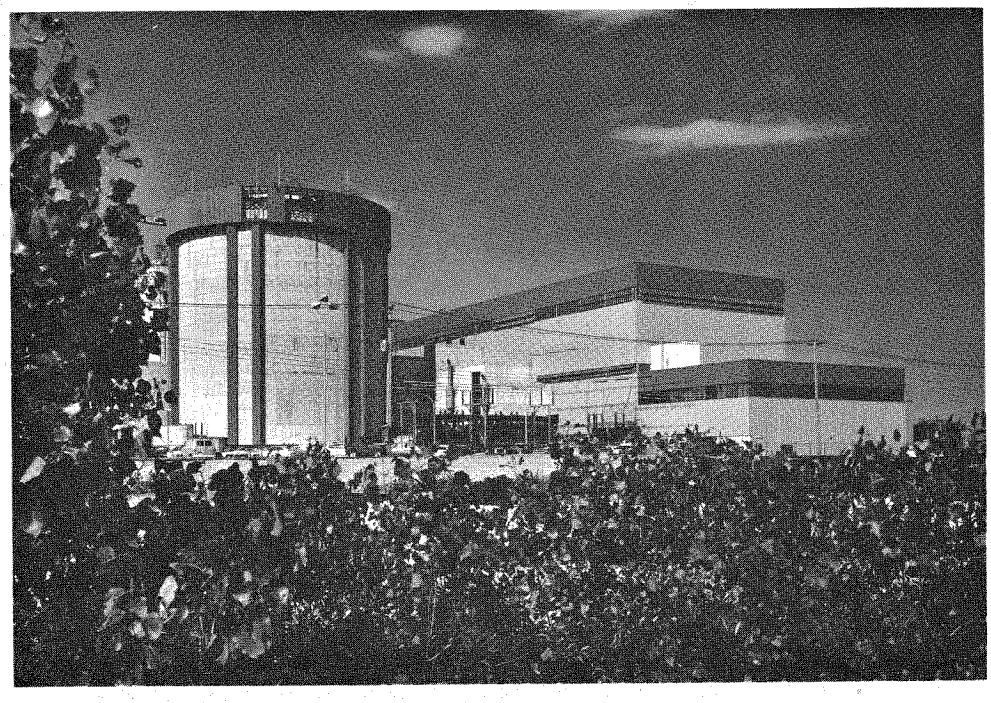

ZION PWR - Commonwealth Edison Co.

Figure 4-15A Typical LWR Nuclear Power Reactors

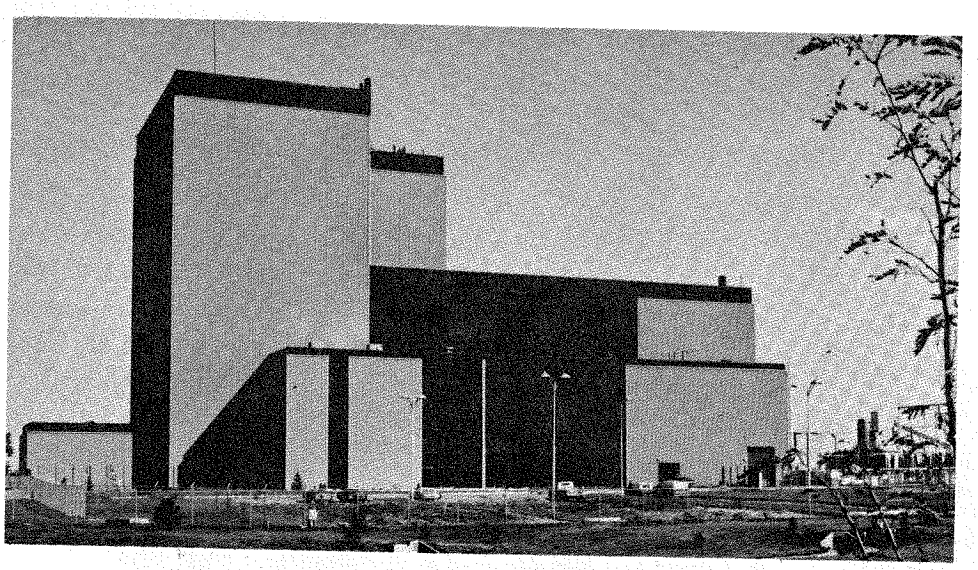

Ft. St. Vrain HTGR - Public Service Co. of Colorado

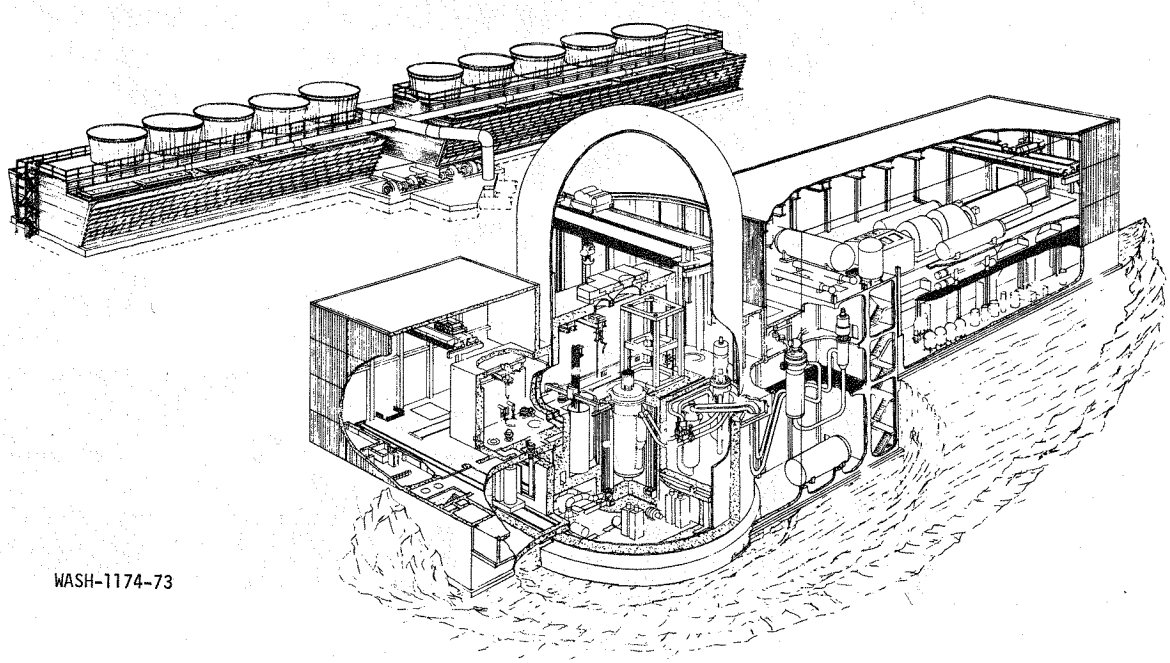

Clinch River LMFBR Demonstration Plant

Figure 4-15B HTGR and LMFBR Nuclear Power Plants

future the LWR "plutonium burning" reactor (PuB) may be developed by such substantial changes to burn not only its own but other LWR (e.g., open cycle) recycle Pu, without any UO_2 fuel rods. Some differences between LWR plant designs (building and equipment arrangements) may result from optimization and unique advantages of site types. Table 4-8 compares principal differences.

Table 4-8 Light Water Reactor Site Factors

DISPERSED SITE LWR	PARK LWR
SINGLE REACTORS, OR DUAL REACTORS WITH SOME SHARED FACILITIES.	SINGLE REACTOR REPLICATE BUILDINGS.
FIELD CONSTRUCTION.	ONSITE FACTORY MODULAR CONSTRUCTION.
SEPARATE OR DUAL REACTOR FUEL POOLS.	CENTRAL SPENT FUEL STORAGE; USED LATER FOR REPROCESSING FACILITY.
RECYCLE LWR, SGR, OR OPEN CYCLE LWR MAY SELL Pu TO PuB OR LMFBR.	OPEN CYCLE OR RECYCLE LWR OR SGR, OR PLUTONIUM BURNER.
CONDENSER COOLING ONCE-THROUGH (RIVER, OCEAN), OR POND, OR WET OR DRY TOWER.	CONDENSER COOLING POND, OR WET OR DRY TOWERS MAY CAUSE HIGHER MAXIMUM FEEDWATER TEMPERATURE AND LOWER LWR/TG EFFICIENCY.
OPERATING AND MAINTENANCE SAVINGS FOR DUAL UNITS.	MULTI-UNIT SHARED OPERATIONS AND MAINTENANCE SAVINGS.
NEGLIGIBLE LWR OFFGAS RELEASES. NO CONCURRENT REPROCESSING FABRICATION FACILITIES.	MORE GAS CLEANUP FOR RELEASE INTO SAME ATMOSPHERIC DILUTION STREAM; IN SOME PARKS, CONCURRENT REPROCESSING/ FABRICATION FACILITY RELEASES.

This park study uses actual data where available for plants of approximately 1300 MWe size, for realism and for reference to differentiate cost comparisons of multi-plant parks from dual plant dispersed sites. No distinction is made between BWR and PWR plants in the fuel cycle and cost analyses, although brief descriptions of the two types are given below for information. Reference descriptions of large PWR, BWR and HTGR power plants are given in WASH-1230, "1000-MWe Central Station Power Plants Investment Cost Study"[6].

4.3.1.2 BOILING WATER REACTOR. Currently (early 1975) in the United States there are about 20 BWR operating and 55 more committed, from one reactor vendor. In the present large BWR, water is boiled at about 1025 psig by heat from nuclear fission in the core, the steam is dried by directional changes in the top of the reactor, piped to the turbine generator at about 962 psig, condensed, and returned by feedwater pumps to the reactor. Two large recirculation pumps take water from the reactor and return it at high pressure to 20 or 24 jet pumps inside the reactor which put a larger recirculation flow up through the core to increase the steam output. Principal BWR parameters are shown in Table 4-8A.

The BWR reactor building employs pressure suppression containment, in which any major steam/water leak would be channeled by the drywell through underwater vents into the suppression pool to quench the pressure and retain radioactivity. Any gaseous radioactivity bubbling through the pool would be retained and shielded in the steel and concrete pressure containment. (Early BWR plants used only dry containment, designed for higher pressures.)

Adjacent to the reactor and turbine generator buildings are the control, auxiliary, fuel, radwaste, and diesel generator buildings. Other structures include the administration building, the large facilities for condenser cooling water, a fossil-fueled "house boiler" for service steam, and the switchyard and transmission lines. In a dual reactor plant some of these facilities are shared.

4.3.1.3 PRESSURIZED WATER REACTOR. In early 1975 in the United States there are about 28 PWR operating and 112 more committed, from three reactor vendors. The PWR operates at high pressures (about 2235 psig) to improve heat transfer and prevent boiling of the water heated by nuclear fission in the core. This water is circulated through the core and around the several primary loops by a recirculation pump in each loop. A steam generator in each loop boils secondary water and dries the steam, which is piped to the turbine generator at about 1055 psig, condensed, and returned by feedwater pumps to the steam generators. Principal PWR parameters are shown in Table 4-8A.

Most PWR reactor buildings employ the dry containment principle against primary system rupture, in which the reactor, steam generators, recirculation pumps, pressurizer tank, etc. are enclosed in a steel and concrete pressure containment and shielding building. The primary equipment is also enclosed in local shielding for maintenance. The containment is not normally occupied during

Table 4-8A Typical LWR, HTGR, LMFBR Parameters

Reactor Type	BWR	PWR	HTGR	LMFBR
Core Heat Output, MWt	3800	3800	3000	975
Electrical Generation, MWe gross	1300	1300	2-600	380
Core Coolant	Water	Water	Helium	Sodium
Core Coolant Flow, Million lb/h	113	145	11	41
Coolant Press. psia-Temp. ^{o}F	1040-550	2235-626	715-1393	15-995
Primary Coolant Pumps, No. -hp	2-7300	4-8000	6-Stm. Turb.	3-5000
Intermediate Coolant	---	---	---	Sodium
Steam Generators, No.	---	4	6	2 Evap., 1 SupHt.
Diameter x Height, ft	---	16 x 72	13 x 30	4.3 x 65
Steam at Turbine, psia-^{o}F	977-542	1070-549	2415-950	1465-900
Steam Flow, Million lb/h	17	17	8	3.3
Reactor Vessel, Material	Steel	Steel	Concrete	Stainless Steel
Diameter x Height, ft	22 x 72	22 x 44	100 x 91	20 x 55
Active Fuel Zone, Diam x Hght, ft	16.5 x 12.3	11 x 13.7	28 x 21	6.2 x 3
Fuel Assemblies, No.	784	193	3944	198
Enrichment, Fuel Material	1.5-3.5% UO_2	2-5% UO_2	93% UC	18-27% $PuUO_2$
Fuel Cladding	Zircaloy-2 Tubes Zircaloy-4 Ch	Zircaloy-4 Tubes	Ceramic coated Particles	S/S Tubes
Total Fuel Weight	370,000 lb UO_2	254,000 lb UO_2	3800 lb U	16,500 lb MO_2
Fertile Material			Thorium Oxide coated particles 82,700 lb Th	Depleted UO_2 in S/S Tubes
Control Rod Drives, No. Type	193 Locking Piston	69 E.-mag. Jack	73 Winch	19 Screw, Spring
Mounting, Entry	Bottom, Bottom	Top, Top	Top, Top	Top, Top
Control Rods per Drive, No., Shape	1 Cruciform Blade	24 Rods	2 Rods	1 Bundle Rods
Neutron Absorber	Boron Carbide	In-Ag-Cd or B_4C	Boron Carbide	Boron Carbide

reactor operation. A few PWR plants will have a pressure suppression design in which any major hot water/steam leak would be channeled through trays of ice in the containment.

Adjacent buildings include control, auxiliary, fuel, radwaste, and diesel generator equipment, and a fossil-fueled "house steam" boiler. Other structures include the administration building, large facilities for condenser cooling water, switchyard and transmission lines.

4.3.2 High Temperature Gas-Cooled Reactor.

The HTGR employs a highly enriched uranium/thorium fuel cycle, helium cooling, and graphite moderator. In the United States the 40 MWe Peach Bottom-1 plant first began operating in 1966 and the 330 MWe Fort St. Vrain reactor is now in the initial startup phase. Construction permits are now being sought for the first commercial units, Delmarva'a 770 MWe Summit 1 and 2 plant, and Philadelphia Electric's 1175 MWe Fulton 1 and 2 plant.

The Fulton design, which approaches the 1300 MWe reference size for this park study, has a 3000 MWt HTGR. The reactor is in a prestressed concrete vessel which also contains the six steam generators with steam turbine helium circulators and three auxiliary heat exchangers with electric motor helium circulators. Helium is at 710 psig and superheated steam at the turbine is 955 ^{o}F and 2500 psig. Other parameters of the Fulton HTGR are also shown in Table 4-8A.

Each of the dual HTGRs is enclosed in a cylindrical steel and concrete containment in a cylindrical reactor building. Each has associated buildings for the turbine generators, helium storage, heat exchangers, cooling tower, pumps and diesel generators. Shared facilities include the reactor service, control, auxiliary, and administration buildings.

4.3.3 Liquid Metal-Cooled Fast-Neutron Breeder Reactor.

4.3.3.1 U.S. DEMONSTRATION FBR POWER PLANT. The LMFBR is designed to both produce power and "breed" more fuel than it consumes. The heat from nuclear fission in the reactor core is transferred by molten sodium in primary and secondary loops to water and steam in evaporators and a superheater, and thence to the turbine generator and condenser cooling water. The core, of mixed plutonium-uranium dioxide fissile material (Pu-239+241 and U-235), is surrounded by a blanket of depleted uranium fertile material (U-238) in which the excess neutrons "breed" more fissile plutonium than

fissile material "burned". Spent fuel and blanket material must be removed from the reactor, chemically reprocessed, and refabricated into recycle fuel elements to gain the benefits of the breeder cycle.

In the United States the Clinch River Breeder Reactor Plant is to be constructed in Tennessee for operation about 1982. It is being designed for 975 MWt, 380 MWe gross, and 350 MWe net. It is intended to have an initial breeding ratio of about 1.2, with the prospect of increase to 1.3 later. The reactor operates at near atmospheric pressure, with inert argon cover gas at 15 psig over the molten sodium coolant. Other pressures are 165 psig in the primary loop, 223 psig in the secondary loop, and 900°F 1450 psig steam at the turbine. Other CRBRP parameters are also shown in Table 4-8A.

The reactor, primary pumps, and intermediate heat exchangers are each closely surrounded by a guard vessel to capture any sodium leak and keep the core covered. Interconnecting piping is above the core level. The shielding cells containing the reactor and primary loops are inerted with nitrogen. These cells and the refueling area above are enclosed in the steel containment building. The contiguous buildings include the control, steam generator, turbine generator, diesel generator, and service areas. Two cooling towers and the swtichyard are adjacent.

Spent fuel and blanket assemblies will be transferred by machines containing inert gas, stored in sodium tanks, and shipped in Dowtherm in air-cooled casks.

4.3.3.2 LMFBR FUEL CYCLE INTEGRATION AND BREEDER PARKS. A unique aspect of the breeder reactors and their applicability to energy parks is the matter of doubling time and its dependence on out of pile inventory of fissile material.

Early breeder reactor concepts as epitomized by EBR-II utilized much lower performance metal fueled cores. In consequence, fuel processing and out of pile inventory used to be considered critical factors to overall breeder performance. The concept of an integrated breeder reactor and fuel cycle facility was thus evolved and has been demonstrated at the EBR-II plant at the Idaho National Engineering Laboratory. With the newer LMFBR designs this integration is no longer a critical consideration but nevertheless it does remain as an item of some limited potential value from the closer coupling of breeder fuels facilities with the operating plants, as visualized in the case of PuB parks for instance. One caution that remains and is discussed further in the Reprocessing section is the apparent limited

compatibility between LWR and LMFBR fuel processing needs. This tends to limit the potential for mixed LWR-LMFBR parks.

4.3.3.3 LMFBR DOUBLING TIME CHARACTERISTICS. Using updated LMFBR fuel cycle data, a sensitivity study was performed, covering the effects on Doubling Time and Fuel Cycle Cost as functions of Breeding Ratio (BR), Out-of-Pile Inventory (OOPI), and LOSSES, in reprocessing and fabricating.

Breeding ratio means the rate of creation of fissile material (e.g. Pu-239) divided by rate of consumption or "burning" of fissile material (e.g. U-235 or Pu-239). The LMFBR with provision for stainless steel swelling will have a breeding ratio about 1.25.

Doubling time concerns the closed fuel cycle of reactor - reprocessing - fabrication - shipping - reactor --- etc. Larger breeding ratio means shorter doubling time. Longer out-of-pile (reactor) inventory means longer doubling time. Compound doubling time results when the extra fissile material from each breeding cycle is added to the inventory, and is shorter than simple doubling time (e.g. 25 years compared with 36 years).

In this study, typical parameters of a 1200 MWe LMFBR were chosen and held constant:

- Core average burnup ~ 90,000 MWd/Te
- Core average specific power = 155 kW/kg U+Pu
- Reactor average fissile specific power ~ 1100 kW/kg Pu-239+241
- Core fuel residence time = 24 months
- Nuclear power plant capacity factor = 0.80
- Net efficiency power generation cycle = 0.41
- Plutonium value = $10/g Pu-239+241
- Annual carrying charge rate (9/74) = 0.23
- Fabrication cost (escalated to 1985 and projected the next ten years) ~ $700/kg fissile
- Recovery cost (escalated and projected) ~ $100/kg

None of the above quantities is unusual except the private utility carrying charge rate of 0.23, which includes the effect of loan interest rates expected to remain high, as well as current tax rates and returns on investment. This projection of the money market is the primary cause of higher fuel cycle costs, and accentuates the effect of out-of-pile inventory (OOPI) time.

Figure 4-16 indicates that the intrinsic effect of OOPI on doubling

time is approximately linear (equal space between lines) for typical in-and-out-of-pile time. Thus at a typical BR of 1.25, a 5-month stretch of OOPI increases compound doubling time 2 years.

Sometimes OOPI is expressed as a factor. The simple conversion from months in this case is:

$$\frac{24 + 5}{24} = 1.2$$

This may be somewhat oversimplified because the radial blanket has an in-pile time greater than the pile average 24 months, but is an adequate approximation to an "exact" OOPI factor.

Figure 4-16 also shows that lower breeding ratio exponentially increases doubling time. That is one deleterious effect of having to allow for steel swelling from neutron damage. Fuels under development may return the breeding ratio above 1.3.

Figure 4-17 shows linear effects of both breeding ratio and OOPI on fuel cycle costs. All direct costs of fabrication, reprocessing, shipping, etc. were assumed constant, and only the cost of time itself (essentially loan interest) is the cause of the spread in OOPI lines. Thus, at any breeding ratio, 5 months longer OOPI increases fuel cycle cost about 0.15 mills/kWh. Higher carrying charges or plutonium values would also increase the OOPI cost.

Current studies indicate a typical LMFBR cycle might be as follows:

	Months
In-pile	24
Cooling	5
Reprocessing	2
Fabrication	5
Shipments	1

The effects of fissile material losses, in the range of 0 to 3%, from the fuel cycle are shown in Figures 4-18 and 4-19. For example, at a breeding ratio of 1.25 an increase of losses from 1% to 3% adds about 1-1/2 year to a 15 year doubling time. However, such losses have a minor effect on the fuel cycle cost; about 0.07 mill/kWh added to 1.83 mill/kWh, i.e. 2% more loss causes 4% more fuel cycle cost.

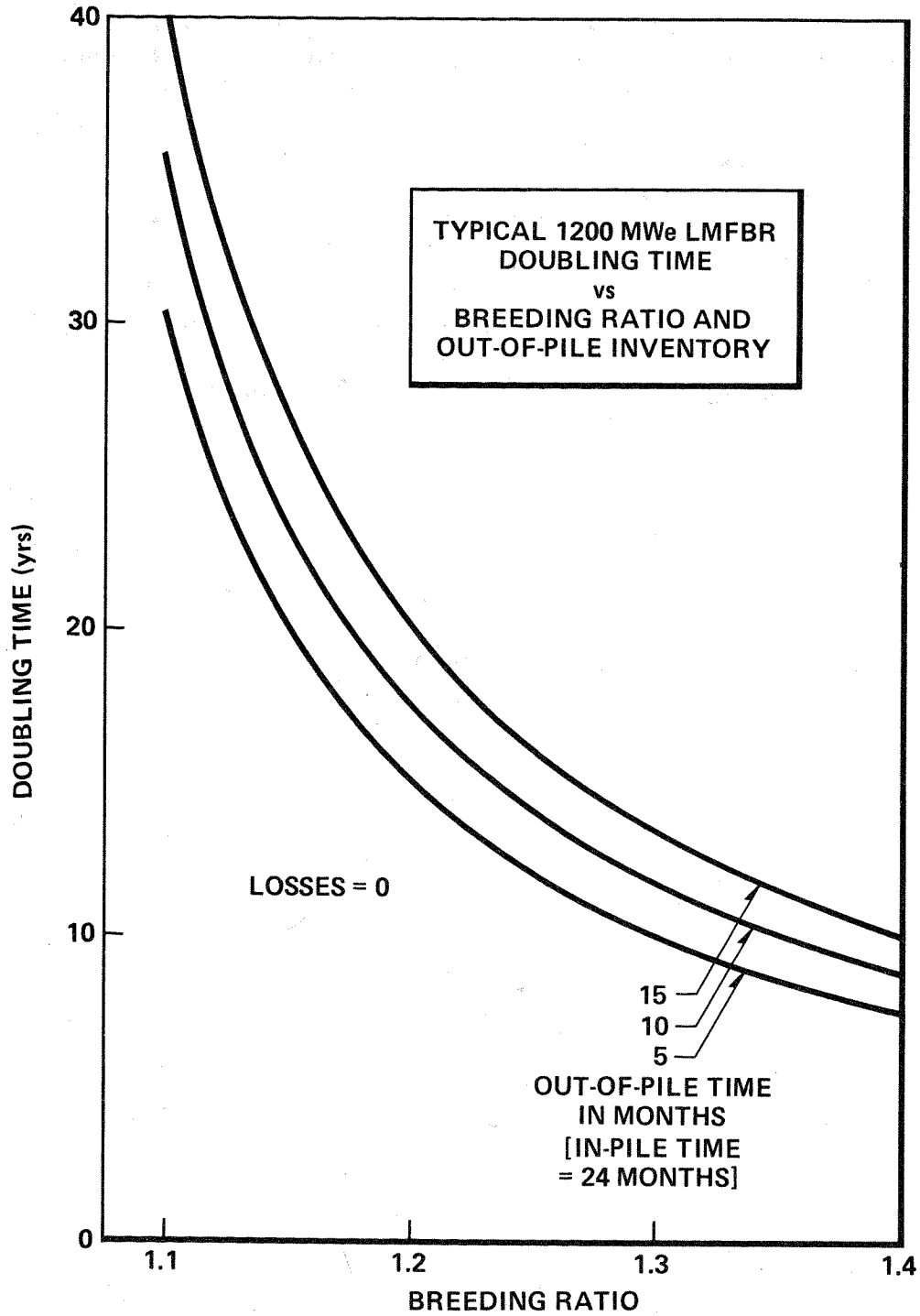

Figure 4-16 LMFBR Doubling Time vs Breeding Ratio and Out-of-Pile Inventory

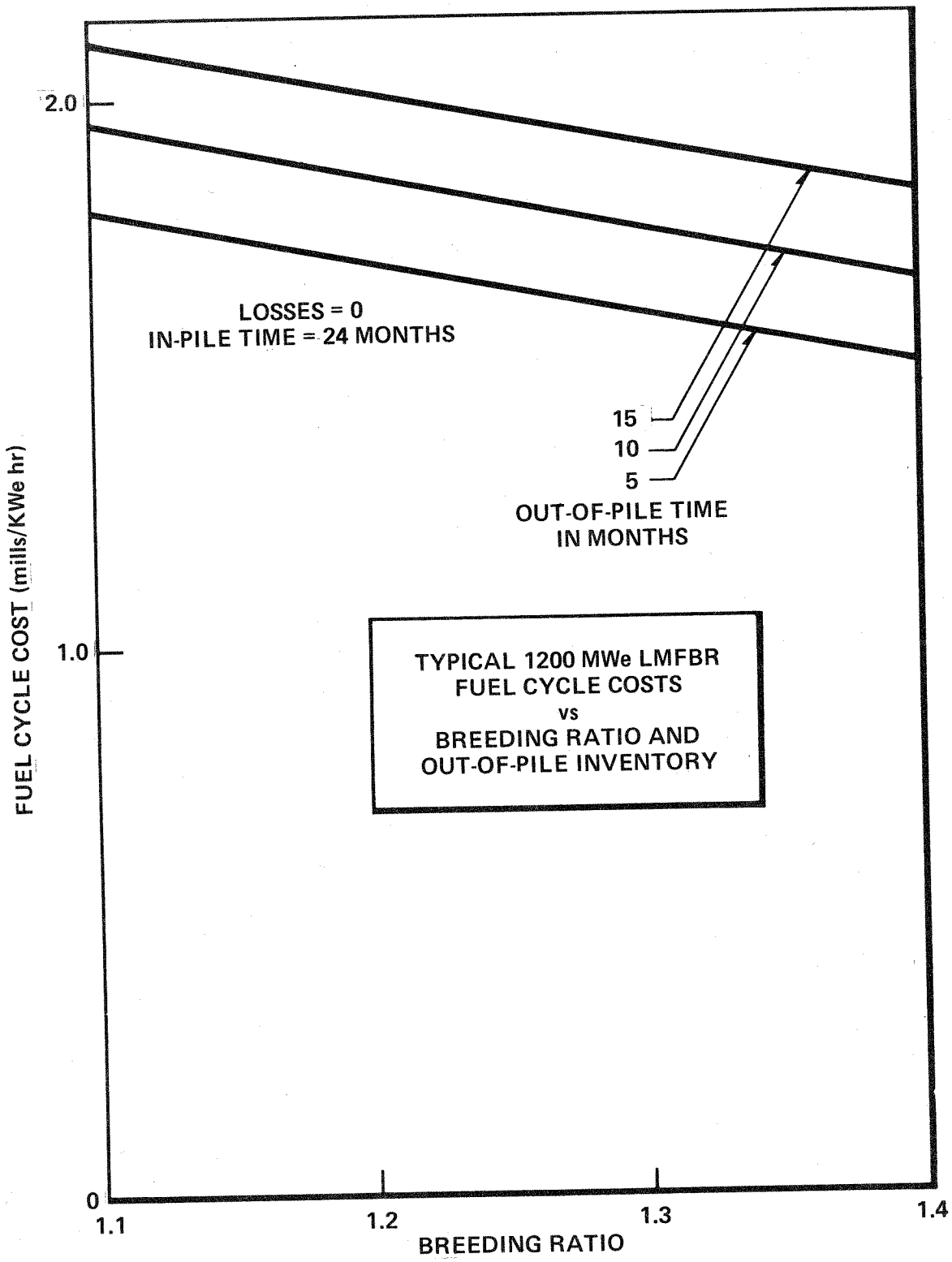

Figure 4-17 LMFBR Fuel Cycle Costs vs Breeding Ratio and Out-of-Pile Inventory

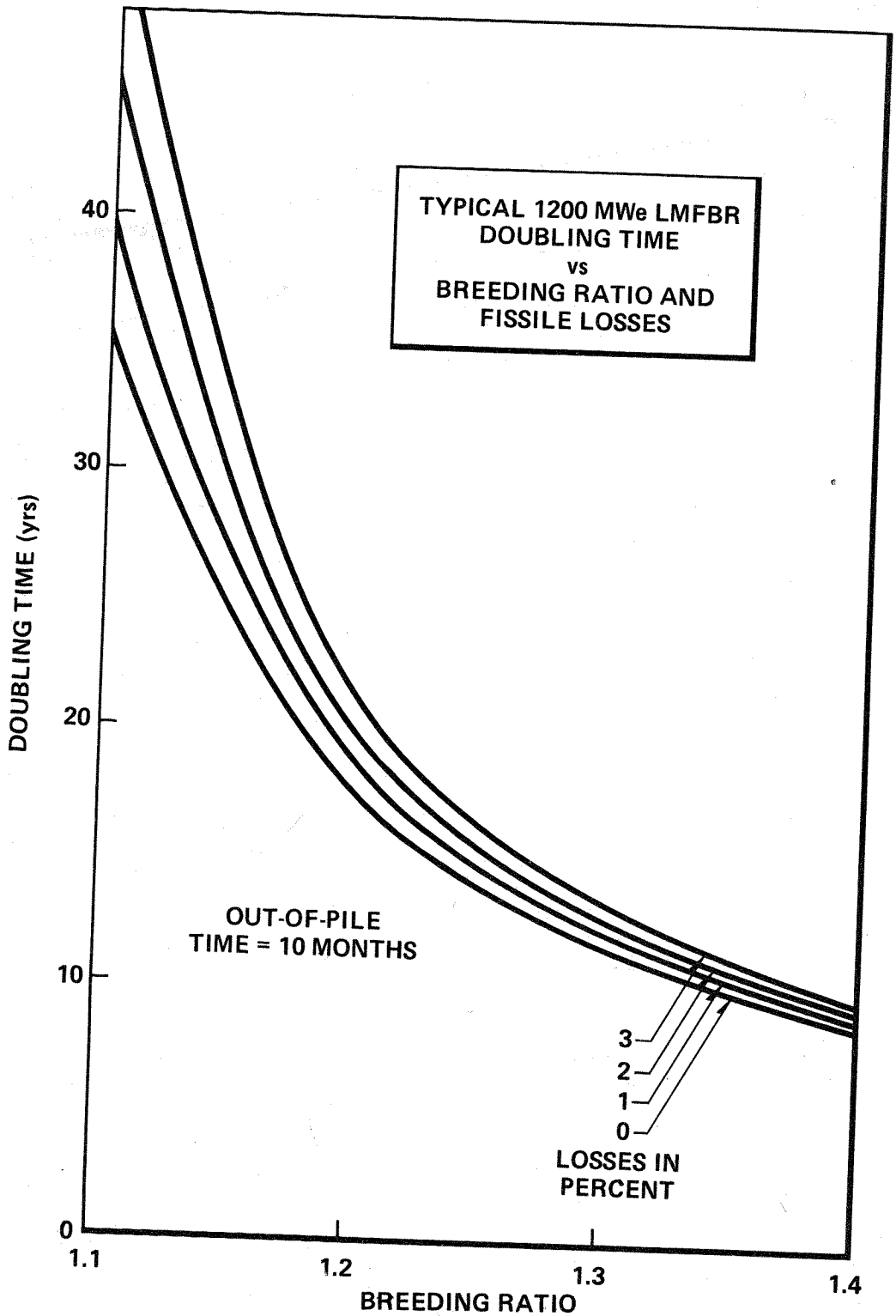

Figure 4-18 LMFBR Doubling Time vs Breeding Ratio and Fissile Losses

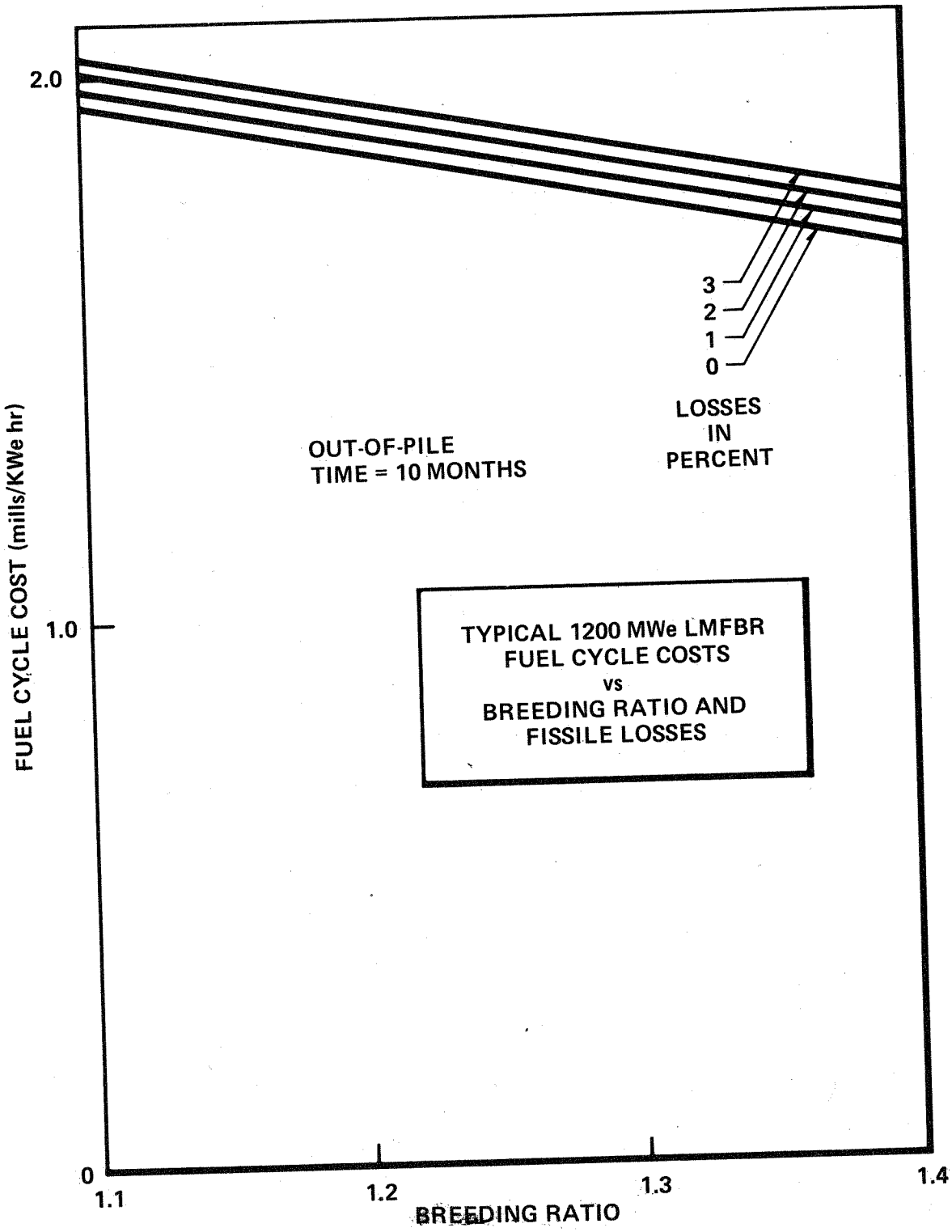

Figure 4-19 LMFBR Fuel Cycle Costs vs Breeding Ratio and Fissile Losses

Subchapter Contents

		Page No.
4.4	ENERGY SUPPLY - THE NUCLEAR FUEL CYCLE	4-63
4.4.1	Introduction	4-63
4.4.2	Background	4-65
4.4.2.1	ELECTRICAL DEMAND & NUCLEAR GROWTH	4-65
4.4.2.2	URANIUM FUEL SUPPLY	4-68
4.4.2.3	FUEL CYCLE ORIENTATION	4-69
4.4.3	Nuclear Installation Scenarios	4-74
4.4.3.1	AEC FORECAST SCENARIO	4-74
4.4.3.2	PROMPT PLUTONIUM RECYCLE SCENARIO	4-76
4.4.3.3	LIMITED RECYCLE SCENARIO	4-78
4.4.3.4	PuB SCENARIO	4-80
4.4.4	Facility Siting Relationships	4-82
4.4.4.1	CURRENTLY PLANNED DISPERSED FACILITY SITING	4-82
4.4.4.2	IMPLICATIONS FOR INITIAL NUCLEAR PARK SITING	4-84
4.4.4.3	CONSIDERATION OF NON-LWR FUEL CYCLES	4-86
4.4.5	Potential Dispersed Site & Park Configurations	4-88
4.4.5.1	FUEL CYCLE INTEGRATION	4-88
4.4.5.2	ENRICHMENT FACILITIES	4-92
4.4.5.3	OTHER FUEL CYCLES	4-93
4.4.5.4	FUEL CYCLE LOGISTICS	4-93
4.4.6	Fuel Cycles in Typical Parks	4-98
4.4.6.1	TRANSIENT APPROACH TO MATURITY IN SGR PARKS	4-98
4.4.6.2	TRANSIENT APPROACH TO MATURITY IN PuB PARKS	4-101
4.4.7	Summary and Conclusions	4-104

4.4 ENERGY SUPPLY - THE NUCLEAR FUEL CYCLE

4.4.1 Introduction.

Commercial nuclear power has now been under development for more than two decades and throughout this era the theme of a closed nuclear fuel cycle for uranium burning light water reactors has been fundamental to nuclear economics and logistics thinking. The theme has been further supplemented by thoughts of a longer term synergy of the water reactor with breeders, the two being coupled through the use of the man-made fissile material--plutonium. Plutonium from the water reactor would furnish the initial fissile material for the breeder reactors following some ten or so years behind in the overall schedule of nuclear developments. Incidentally, the concept of energy parks or centers at best received brief mention and was not really related to the economics and logistics of the nuclear fuel cycle.

The actual situation of the U. S. nuclear program today evidences some marked differences from the plan of the 1950's. For instance, the light water reactor fuel system is not really a closed cycle at the present time in that full scale fuel processing and recovery of nuclear material are not yet implemented. The breeder reactor is somewhat further distant and as such, the synergy with light water reactors is correspondingly weakened. Furthermore, in the interim the improved converters, particularly the HTGR, and the light water breeders based on thorium fuel cycles have come into being. These are, however, still at the development level with a somewhat uncertain role in the overall scheme of future nuclear power programs. Finally, and most importantly, the environmental and regulatory climate in which the nuclear industry is now growing has proved to be a more demanding one. It is one which puts substantial pressures on the whole nuclear program and in particular on its fuel cycle. A further development of the environment and regulatory climate is the special consideration of nuclear materials safeguards and the risk of diversion.

Recent concepts of a nuclear center or park complex, while triggered by many aspects of power development generally and by nuclear plant construction considerations in particular, can also interact significantly with a number of the above-mentioned critical aspects of nuclear fueling logistics and economics. The following documentation attempts to quantify where possible both the interactions of parks on the fuel cycle and indeed those special considerations of the fuel cycle which might dictate the magnitude and character of any eventual program of nuclear park development in the U. S. In order to do this, a logic sequence has been developed which starts from a brief overview of the anticipated electrical and nuclear load growth in the U.S.

over the next several decades. The demands of this growth of nuclear installations on nuclear fuel supply and the comparison of this demand with the availability of nuclear fuels leads to some fundamental assumptions or alternates regarding the mix of nuclear installations with time. It suggests, for instance, 30 to 60 park installations or an equivalent 300 to 600 dispersed nuclear sites (2 to 4 reactor units) may be required by the year 2000. In an LWR case, 2 to 3 million tons of U_3O_8 may have to have been mined and processed by year 2000 and perhaps five times that amount identified for future use. This suggests that 1 to 2 thousand tons of plutonium could well be produced in LWRs by year 2000. Other considerations relating to land use planning and the recently initiated survey of potential nuclear parks by the Nuclear Regulatory Commission may well lead to guidelines on park siting and to the potential distribution of nuclear generating capacity across the breadth of the U. S. Still further considerations tying back to environmental factors, and to materials safeguards, influence the freedom with which one can contemplate moving the aforementioned nuclear materials between sites and around the U. S. in total where in the absence of parks some 10 to 20 thousand road and rail shipments per year would be anticipated by year 2000.

Out of these many constraints a logic is developed for possible future mixes of nuclear parks and dispersed site generation, for the suitable integration of nuclear fuel cycles within these boundaries and for the mix of reactor types within said sites. This logic suggests that through a judicious combination of current dispersed nuclear generation sites (over 100 operating by 1985) and future nuclear park sites, the character of special nuclear material flows in support of the fuel cycle might be changed radically. However, the implementation of this concept, to the extent that it implies the prolongation of the unclosed fuel cycle until parks are in existence, involves questions of environmental and economic desirability, of practicality from the standpoint of industry operations and economics, and of the reasonableness and economics of fissile materials utilization. Efforts are made to address the operations and materials utilization consequences of the evolving parks concept, fully recognizing many alternatives and possible rates of industry transition to a parks mode exist. Given these considerations several scenarios of possible nuclear installations in the U. S. as a function of time are developed in terms of fuel cycle specifics and supporting facilities for a range of representative park sites, and for the alternative of continued exclusively dispersed site development.

Throughout the above logic sequence, a number of major uncertainties are identified, alternatives are suggested and, where possible,

developmental requirements necessary to lessen uncertainties are identified. All in all, this view of fuel cycle integration and park development is recognized to depend in substantial part on the overall growth trends for electric power generation and nuclear in particular. Undoubtedly, future technology developments will start to play a role later in the lifetime of the park concept under study. These parks may be 10 years in the planning, 20 to 40 years in construction and a further 20 to 40 years in operation. It is entirely conceivable that over a lifetime one will have witnessed the vast majority of the growth and maturity of the nuclear industry, either due to slower growth in the early 21st century or to supplementation of the nuclear energy by some alternate and thus preferred energy technology.

It is further reasonable to suggest that the parks may ultimately be planned for continuous rejuvenation through retirement and decommissioning of older installations in the park that are to be replaced by newer units. Indeed, there may be significant decommissioning advantages in the park concept.

4.4.2 Background.

In order to quantify the logic sequence spoken of in the foregoing introduction, it is necessary to settle on a series of quantitative assumptions and to examine, in sequence, the constraints and consequences that follow from these. It should be understood that the quantification is for the purposes of being specific and consistent, and by no means implies great precision or certainty. This is particularly true as the post-2000 horizon is viewed, and, indeed, the assumed smoothed extrapolated trends may appear already at variance with current developments and their near-term consequences.

In the following, the growth of demand for nuclear generating capacity is defined in the context of overall energy usage. The relationship of this growth to the nuclear fuel supply situation is discussed. Finally, various fuel cycles are examined in terms of their integration.

4.4.2.1 ELECTRICAL DEMAND AND NUCLEAR GROWTH. Of the total energy consumed annually in the United States, about one-fourth (mostly as fossil fuel) is used in the production of electricity (see Figure 4-20). Historically, the nation has been increasing its use of electrical energy faster than its total energy use (7%/year, electrical vs. ~3%/yr, total). Thus electrical generation and its facilities promise to become increasingly significant factors in the total U.S. energy scene. An extrapolation of these historical trends by some suggests that the electrical fraction of the U.S. energy consumption will double (to >50%) by the end of the century (more than

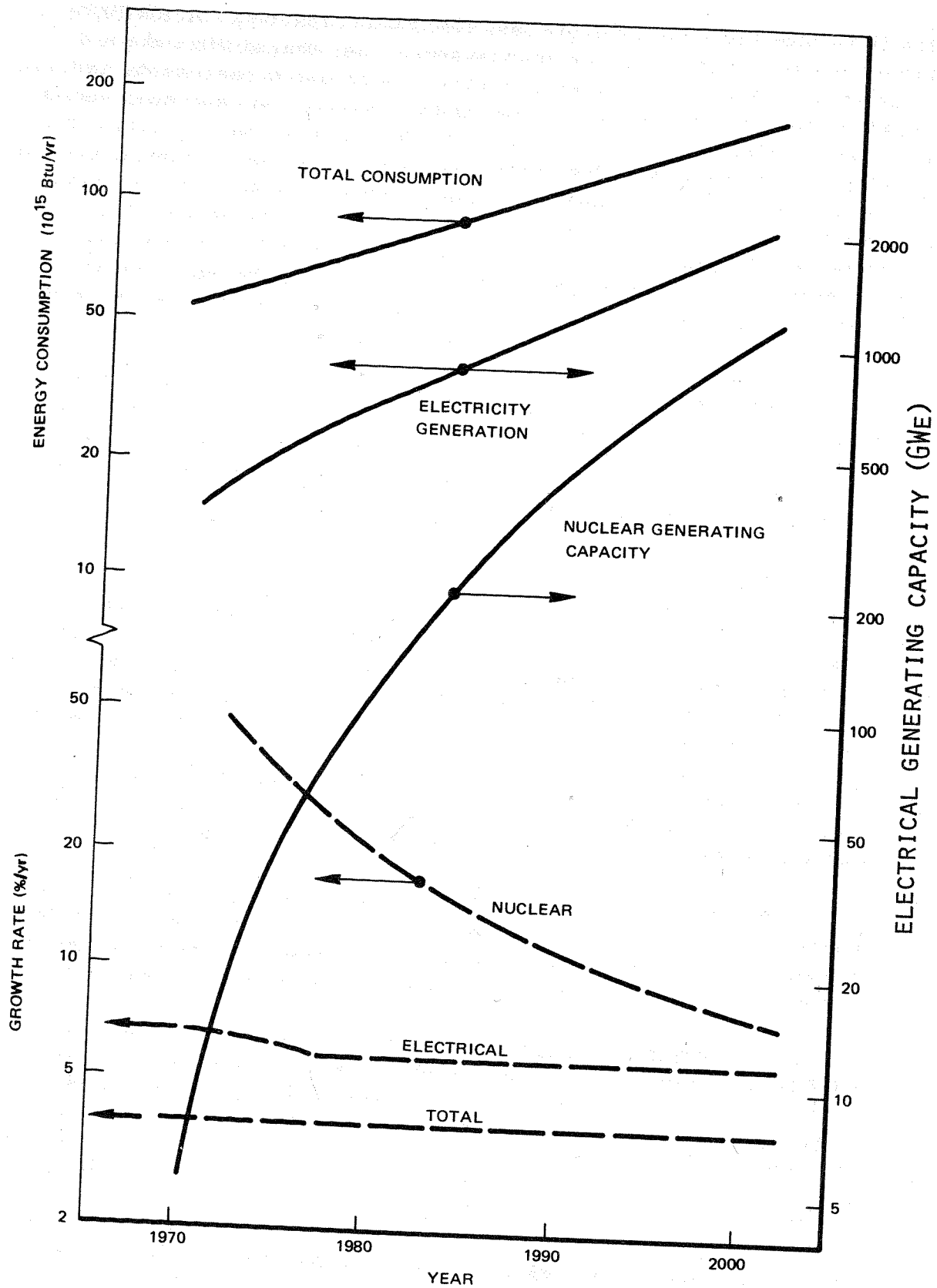

Figure 4-20 Projected U.S. Energy Consumption and Electricity Generating Capacity

a five-fold* increase over current electrical capacity). Actually, because of trends in energy conservation, fuel availability, and national policies, such an extrapolation more likely represents an upper bounding on the slope of electrical growth. Some growth estimates have ranged as low as 4%/year (Ford Foundation Report). The "Project Independence Blueprint" assumes a 6%/year electrical growth rate. The AEC projections [2, 12] used in Figure 4-20 show a growth rate slightly less than 6%/year, leading to a four-fold increase by the year 2000. Nuclear growth rates have an important influence on fissile material conservation thinking - lower growth rates lessen the urgency for plutonium recycle, improvement of conversion/breeding ratios, and required date of introducing such advanced systems.

As mentioned, the current electrical generation involves primarily fossil fuel; only about 10% (~ 50 GWe)** of the generating capacity is nuclear in 1975. However, the nuclear fraction is gaining substantially. By the year 2000, one-half of the existing electrical capacity may be in nuclear plants, and of the capacity being added annually at that time, two-thirds may be nuclear.

This AEC projection [2] indicates about 250 GWe nuclear capacity by 1985 and about 1000 GWe by 2000. Much of the 1985 capacity is already committed. Contemporary financial constraints and reduced short term load growth forecasts are causing the construction of some of the planned nuclear plants to be deliberately delayed or deferred, and in some cases postponed indefinitely or canceled [15]. As a result, nuclear capacity projections such as shown on Figure 4-20, rather than being best estimate predictions, have tended to become identified as national goals (as, for example, in President Ford's State of the Union message to Congress, January 15, 1975).

The intent, in attempting to realize the nuclear projections, is of course to reduce the non-nuclear portion of the electrical generation as much as possible (to ~40% by 2020), thereby benefitting the fossil fuel supply situation. However, the large commitment to nuclear capacity has implications also with respect to the availability of the nuclear fuel since the currently defined U.S. reserves of "economically" recoverable uranium are limited. Also, the uranium requirements will depend on the particular nuclear fuel cycle and its degree of integration (e.g., plutonium recycle). These topics are discussed below.

---

* $(1 + 07)^{25} > 5$

** 1000 MW electrical generating capacity = 1 GWe

4.4.2.2 URANIUM FUEL SUPPLY. The subject of uranium resources and availability is one of complexities and uncertainties, now undergoing more extensive and appropriate study because of its importance to the overall energy scene. It is noted here for the purpose of establishing background and context in which various nuclear development scenarios can be discussed, particularly with regard to parks. For example, a rapid rise of future uranium prices due to the exhaustion of the uranium ore resources or rapid nuclear growth would increase the incentive for plutonium utilization. In the medium term, this could accentuate the role of the LMFBR, given success in its technology development, and foster more consideration of mixed LWR-LMFBR parks or accelerated introduction of dedicated LMFBR parks.

It is frequently asserted [17] that uranium resources are limited and that in the face of expected demand the resources will eventually be exhausted, perhaps before alternate approaches can be developed. The difficulty in quantifying these assertions is that such "limits" tend to be inherently soft. For example, there are billions of tons of uranium in sea water constantly being replenished from continental runoff (~ 27,000 tons/yr) and precipitated on the ocean floor, but the concentration is only a few parts per billion. By contrast there may be only some tens of million tons of uranium in the concentrated (~ 0.1%) ores now being mined in the U.S. Related to the ore concentration is the cost of mining and milling the uranium, so that the "limits" can be thought of in terms of the uranium estimated to be available at various cost levels (Table 4-9). Thus, the form of the nuclear fuel cycle appropriate to the evaluation of parks vs. dispersed generation relates to still another uncertainty, namely, the question of what constitutes an acceptable cost, both in terms of fuel cycle economics and in terms of less tangible costs such as environmental consequences of mining lower-grade deposits.

To put these supply estimates into perspective with the expected demand, one can show that if ore costs of $30/lb were acceptable, the currently identified supply could provide lifetime (~ 35 years) fuel, assuming full recycle of Pu and U, for a LWR installed capacity of about 600 GWe, a figure similar to that forecast by the AEC for commitment in the next decade. This is somewhat before any potential park plans could have proceeded much toward implementation. On the other hand, an increase of $100/lb in the cost of uranium ore impacts on the LWR fuel cycle to some 6 mills/kWh (about 60¢/MBtu), the equivalent of a $3.60/barrel rise in oil price. Thus it is unclear when parks or dispersed nuclear generation will need to become LMFBR-oriented as a result of potential exhaustion of low-cost uranium reserves.

Table 4-9 U.S. Nuclear Fuel Supply*

ORE CONCENTRATION (PPM U_3O_8)	COST CEILING ($/LB)	SUPPLY KNOWN OR EXPECTED TO BE FOUND (MILLIONS OF TONS U_3O_8)	GEOLOGICAL SOURCE
2000	8	0.6	WESTERN U.S. MINING DISTRICTS
1600	10	1.0	
1000	15	1.5	
200	30	2.4	
60	50	9	EASTERN U.S. SHALE DEPOSITS
25	100	20	
0.003	SEVERAL HUNDRED?	SEVERAL THOUSAND?	SEAWATER

* Similar to data quoted in references 7, 17, and 18.

In addition to the long term supply considerations, there can be near term constraints arising not from the ultimate supply available, but from the rate at which uranium production facilities can be increased to meet a rapidly rising demand, particularly considering the required lead time (~ 8 years). Indeed, a near term uranium shortage during the next decade is a likely development and could well require a temporary resort to other than domestic uranium supplies, with political and economic implications.

4.4.2.3 FUEL CYCLE ORIENTATION. The concept of a nuclear energy park involves not only the location of several reactors at a single site but also the possibility of also locating at that site some or perhaps all, of the other fuel cycle facilities involved in integrating or "closing" the fuel cycle. The facilities of the nuclear fuel cycle and the logistical flows between them are shown schematically in Figure 4-21. A general discussion, applicable to any of the various nuclear fuel cycles is given below.

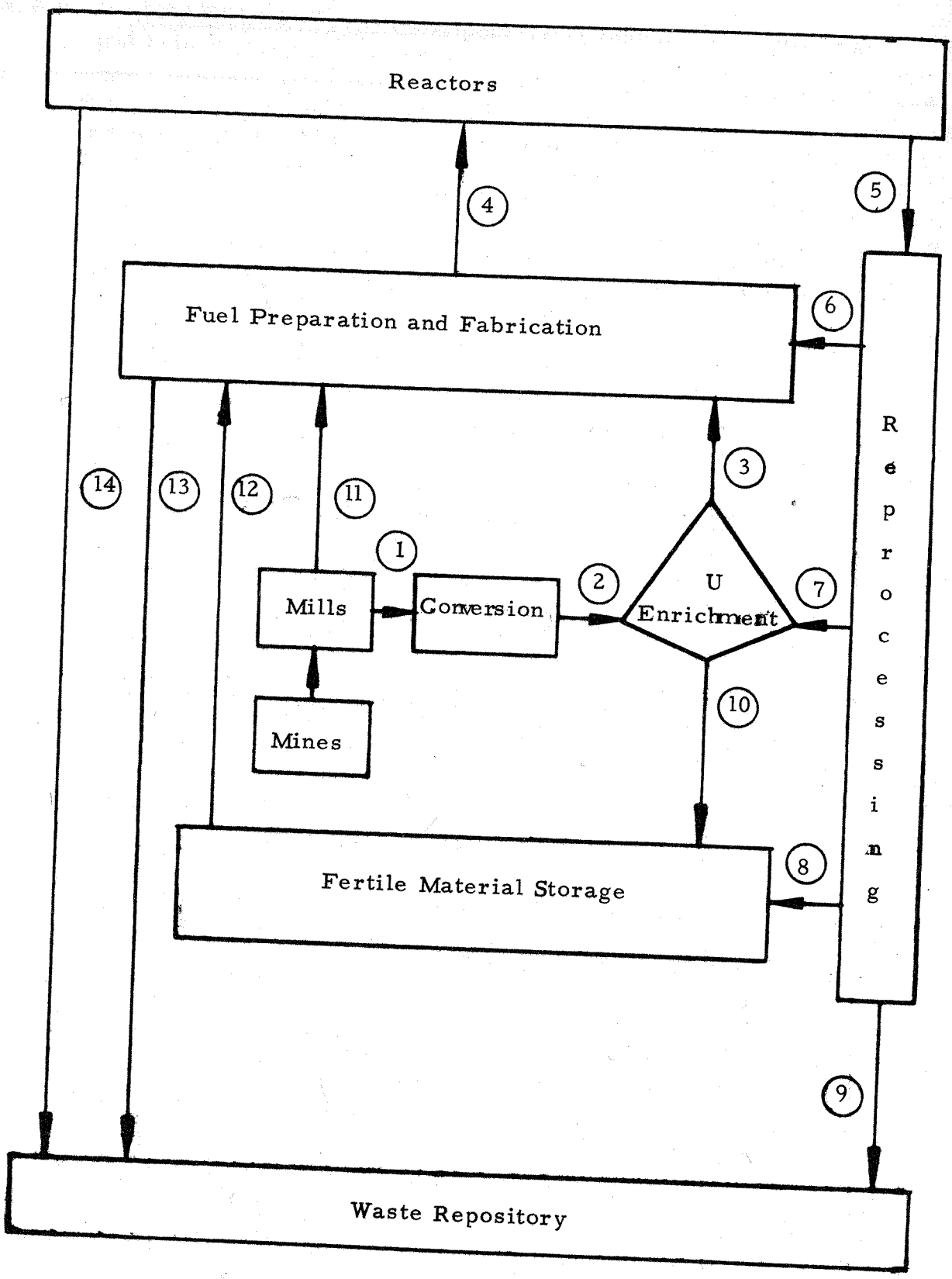

Figure 4-21 The Nuclear Fuel Cycle

Referring to Figure 4-21, the path labeled (1) represents the flow of natural uranium (as U_3O_8 "yellowcake") extracted from mined ore by the uranium mills. In path (2) the natural uranium has been converted to UF_6 and is being sent to the separation plant for enrichment. In the enrichment process, uranium enriched in the fissile U-235 isotope is sent by path (3) to fuel element fabrication facilities, and the residual uranium tails (depleted in U-235) are sent to storage via path (10) . Whereas natural uranium contains 0.7% U-235, the material in path (3) is enriched to 2 to 5% for use in LWRs and is highly enriched (~93%) for use in the thorium cycle (e.g., in the HTGR). In the latter case, the fertile thorium is supplied by path (11) .

In path (4) , fresh fuel assemblies are shipped to the reactor site for initial cores or reloads. After discharge from the reactors, the spent fuel assemblies are stored at the reactor site for cooling and subsequently shipped via path (5) to the reprocessing site where they may be stored for later reprocessing or reprocessed on arrival. The spent fuel in path (5) contains the residual fissile material (e.g., U-235), the residual fertile material (e.g., U-238), and the fissile material (e.g., Pu-239) "bred" from neutron absorptions during reactor operation.

In order to "close" the fuel cycle, radioactive fission products are removed in the reprocessing operation and stored or shipped via path (9) , and the recovered fissile material (e.g., Pu or U-233) is returned via path (6) to the fuel fabrication facility for "recycle" back through the reactors. The residual uranium typically is still slightly (0.5 to 0.8%) enriched in U-235 and can be returned via path (7) to the separation plant for reinsertion into the enrichment process, or it can be stored via path (8) or possibly used via path (12) in the mixed oxide (MO_2) fabrication of plutonium recycle fuel assemblies.

Paths (9) , (13) and (14) represent the disposal of wastes generated in fuel cycle operations.

Figure 22-a shows some specific nuclear fuel cycles. Figure 22-a shows how the abbreviated diagram relates to the general nuclear fuel cycle discussed above. Figure 22-b shows light water reactors in the self-generated recycle (SGR) mode of plutonium recycle. The reactor is fueled with low-enriched uranium (U-235 + U) and mixed oxide fuel (Pu + U). The discharge fuel is reprocessed to remove the residual uranium (U-235 + U) and fission product wastes, and the recovered plutonium is returned to the fabrication plant to be combined with makeup fuel (U-235 + U).

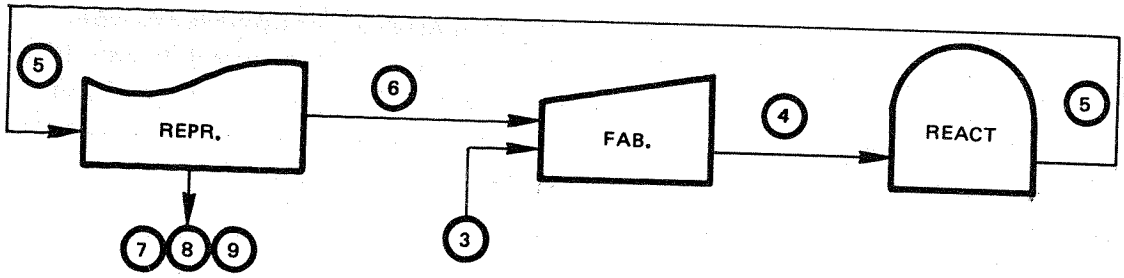

Figure 4-22a Generic Fuel Cycle

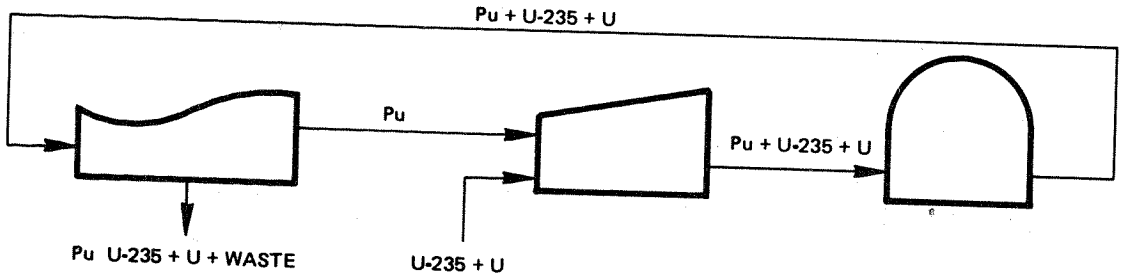

Figure 4-22b LWR With Pu Recycle

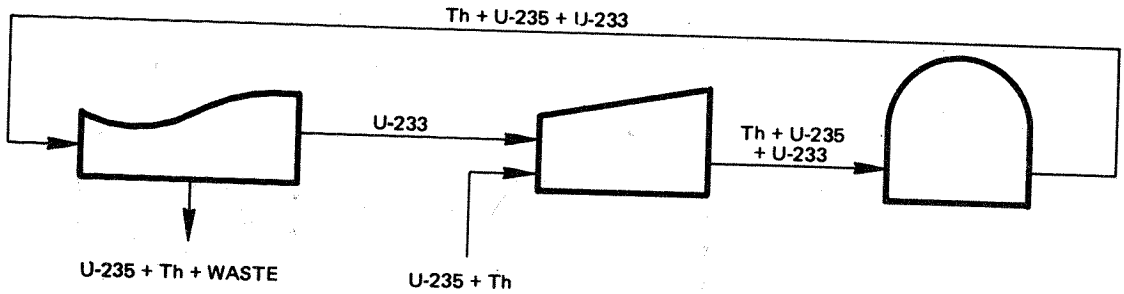

Figure 4-22c HTGR With U-233 Recycle

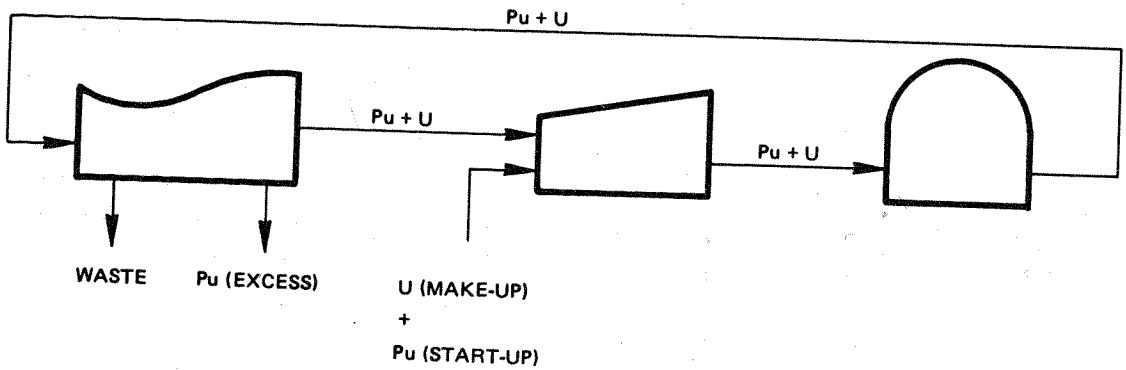

Figure 4-22d LMFBR Fuel Cycle

Figure 22-c shows the equivalent thorium fuel cycle used in the HTGR. Here thorium replaces uranium as the fertile material and U-233 replaces plutonium as the "feed" material. Both U-233 and Pu are strategic special nuclear material (SNM)* and require special safeguarding. The make-up material in the HTGR fuel cycle is highly enriched uranium, which is also strategic SNM, and this is an important distinction between the HTGR and LWR fuel cycles.

Figure 22-d shows the liquid metal fast breeder reactor cycle in which the breeding of plutonium from the fertile uranium produces a net excess of plutonium. This plutonium is then available as initial fissile loadings for new LMFBR or for make-up fuel in LWRs. The plutonium for the startup of the initial LMFBRs is normally assumed to come from the reprocessing of LWR spent fuel and to be preferable from a neutron economy standpoint to using U-235 enrichment for the startup of LMFBRs.

---

* "Stratetic SNM" is plutonium, uranium-233 and uranium enriched to greater than 20 percent in the uranium-235 isotope (materials from which a nuclear explosive can be fabricated).[12]

4.4.3 Nuclear Installation Scenarios

In this section several scenarios are presented depicting various possibilities for the deployment of nuclear power growth. The intent of the scenarios is to illustrate various mixes of reactor types and location (dispersed or in energy parks), and to discuss some of the consequences of these assumptions, particularly with regard to the recycle of plutonium under postulated typical growth circumstances.

4.4.3.1 AEC FORECAST SCENARIO. The nuclear growth projected in Figure 4-20 is shown again in a linear plot in Figure 4-23. The distribution of the growth among LWRs, HTGRs, and LMFBRs is indicated and is similar to that of the AEC projections [12]. It is seen in this AEC Forecast Scenario that light water reactors are expected to dominate the scene, even with what may be optimistic assumptions as to the construction rate of gas-cooled reactors and the timing of rate of introduction of fast breeder reactors.

The fuel discharged from the LWRs, even though "spent", still contains appreciable fissile content (typically about half of the initial amount), partly in the form of plutonium. In this AEC Forecast Scenario it is assumed that this spent fuel is reprocessed to recover the fissile material, the uranium is recycled back through the enrichment process and the recovered plutonium is stored (a valuable resource) for use later to fuel the initial cores of the LMFBRs. Alternatively, since there is limited plutonium requirement for the LMFBRs until at least the 1990's, the LWR spent fuel could be stored and reprocessed only as needed. Even then, not all of the spent fuel need be reprocessed to satisfy the plutonium requirements of the breeder. (The cumulated plutonium flows and inventories implied by Scenario I are shown on Figure 4-23.) Partial reprocessing of the spent fuel, although satisfying the plutonium demand, would also tie up fissile uranium that otherwise could be recycled to reduce LWR ore requirements by perhaps 10%.

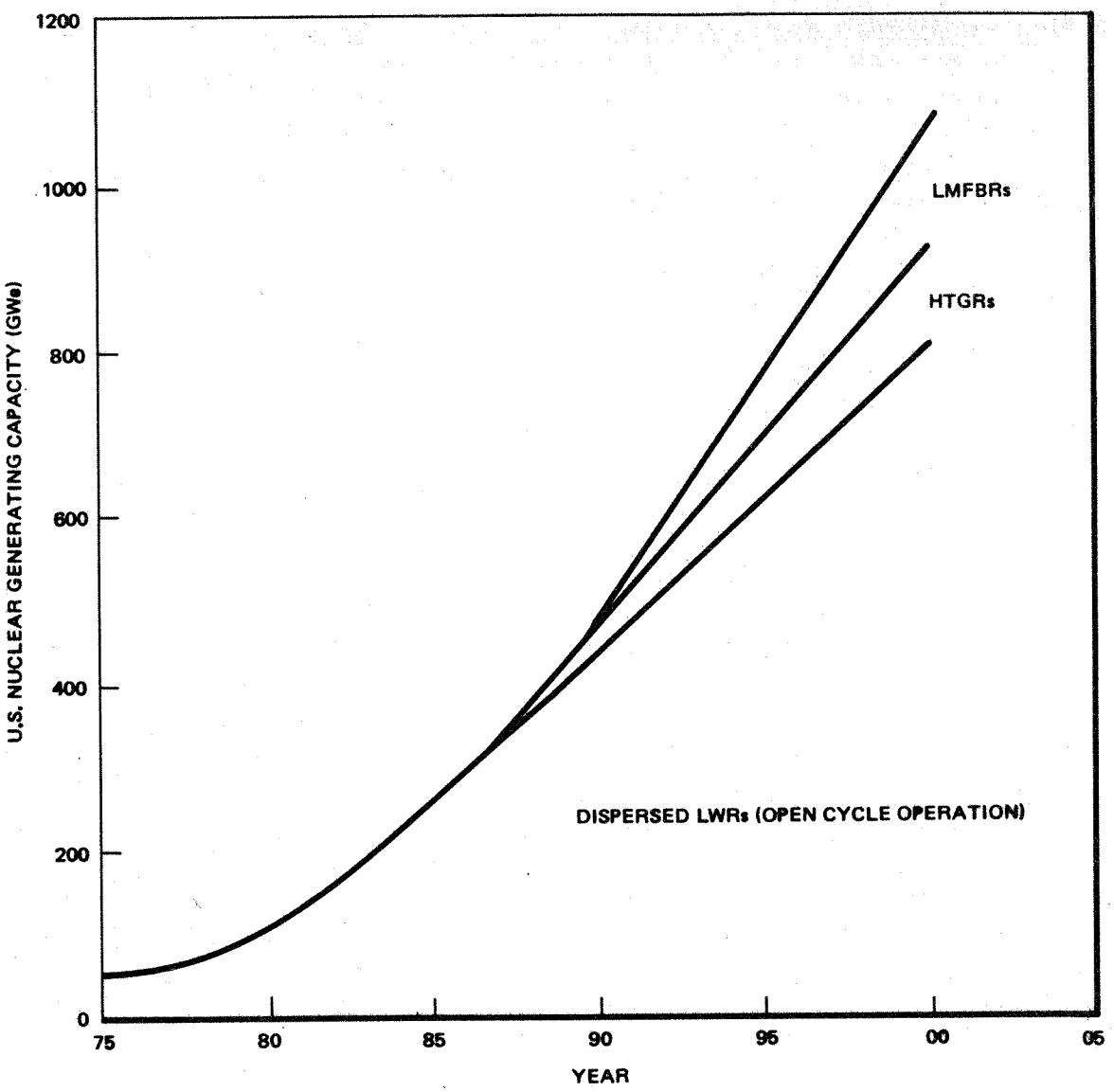

1999 CUMULATED FLOWS AND INVENTORIES, METRIC TONS FISSILE PLUTONIUM:

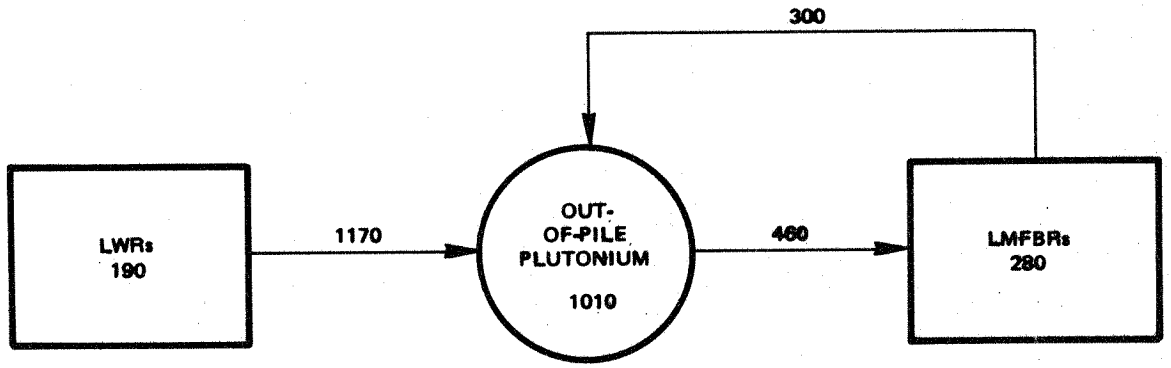

Figure 4-23 AEC Forecast Scenario

4.4.3.2 PROMPT PLUTONIUM RECYCLE SCENARIO. The AEC Forecast Scenario was characterized by plutonium availability in excess of requirements. In this Prompt Plutonium Recycle Scenario (Figure 4-24). it is assumed that the spent fuel is reprocessed as soon as possible, most of the fissile plutonium and uranium is recovered, and the uranium and excess plutonium are recycled back into LWRs. By 1999 for example, half of the discharged plutonium has been returned to the LWRs, and the remainder is in process (spent fuel cooling, reprocessing, working inventories, fabrication, shipping, prereload inventories, and core startup). Although the plutonium recycled into LWRs raises the core inventory and increases the plutonium discharge, about half of the recycled plutonium is consumed in each pass through the reactor. It can be seen that the total plutonium inventory (in-and out-of-pile) has been reduced about one-fourth by the recycle of the plutonium, with corresponding savings in fissile uranium.

In LWR recycle, the plutonium is fabricated into mixed oxide (MO_2) rods in which the plutonium substitutes for the U-235 fissile content of the uranium. These mixed oxide rods then replace some of the UO_2 rods in the fuel assemblies. After irradiation in the LWR, all rods will contain plutonium from neutron absorptions in the fertile U-238. The irradiated UO_2 rods will contain ~0.5% fissile plutonium, while the MO_2 rods started with ~4% plutonium, which depletes to 2-3% during irradiation.

From the standpoint of saving isotope separation work by replacing U-235 with plutonium, it would be advantageous to use the plutonium to reduce the uranium enrichment somewhat in all rods, instead of substantially in a few. However, rods containing MO_2 are more expensive to fabricate and therefore it is economic to concentrate the plutonium in as few rods as possible.

Thus the plutonium recovery from irradiated rods can provide only enough plutonium to produce relatively few MO_2 rods. About one-sixth of the first LWR reload rods can be MO_2. With subsequent passes, more plutonium is recovered and in equilibrium about one-third of the reload rods would be MO_2. Because of the rapid introduction of new LWRs containing initially no MO_2 rods, however, equilibrium is not reached and only about 10% of the total fuel fabrication is MO_2.

In this Prompt Plutonium Recycle Scenario, in the 1980's all available plutonium is going into MO_2 rods for LWR recycle. By the 1990's, the rate of plutonium recycle in LWRs is leveled off and the additional plutonium from new LWR capacity is utilized to fuel the breeders being introduced at that time.

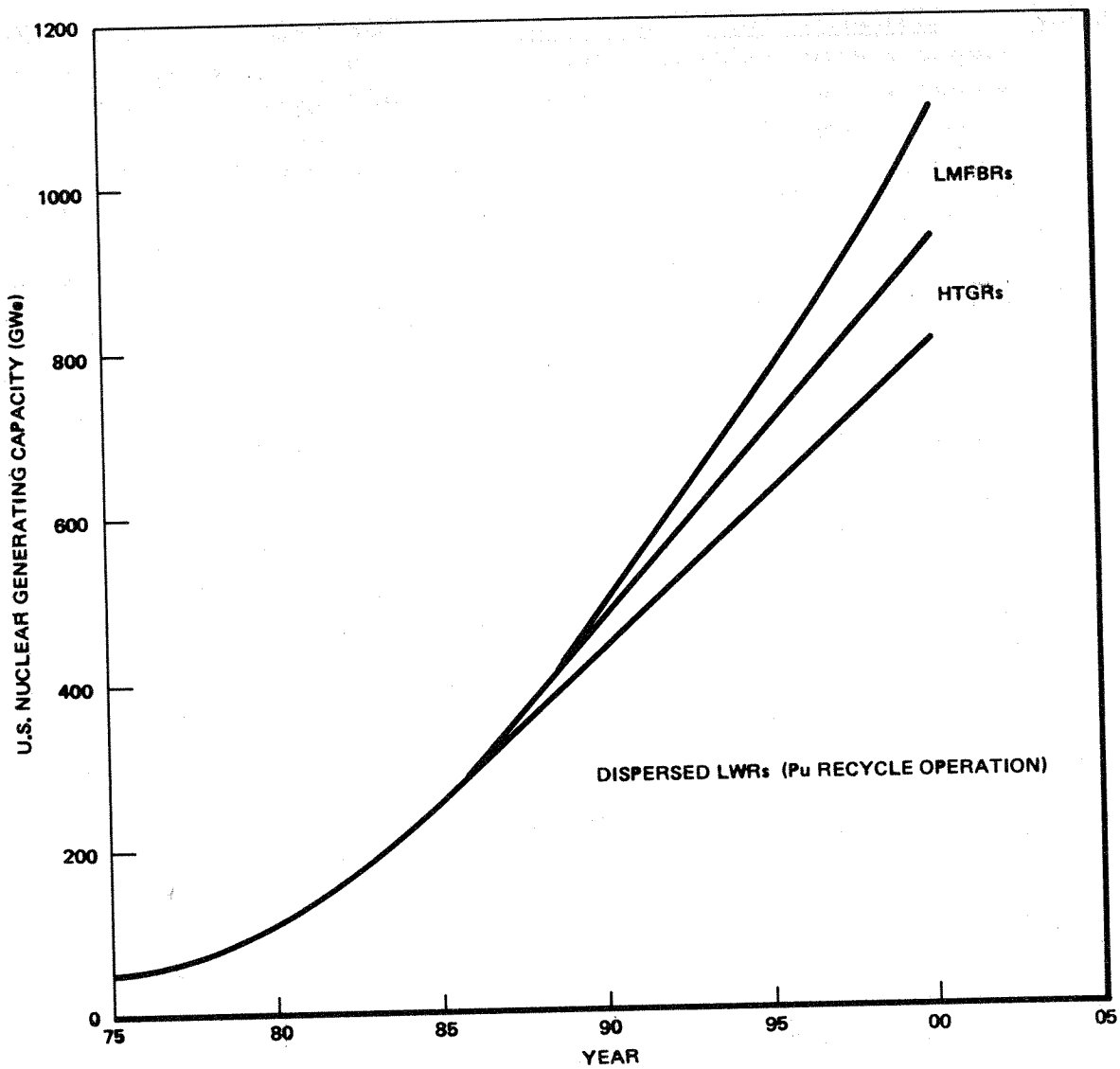

1999 CUMULATED FLOWS AND INVENTORIES, METRIC TONS FISSILE PLUTONIUM:

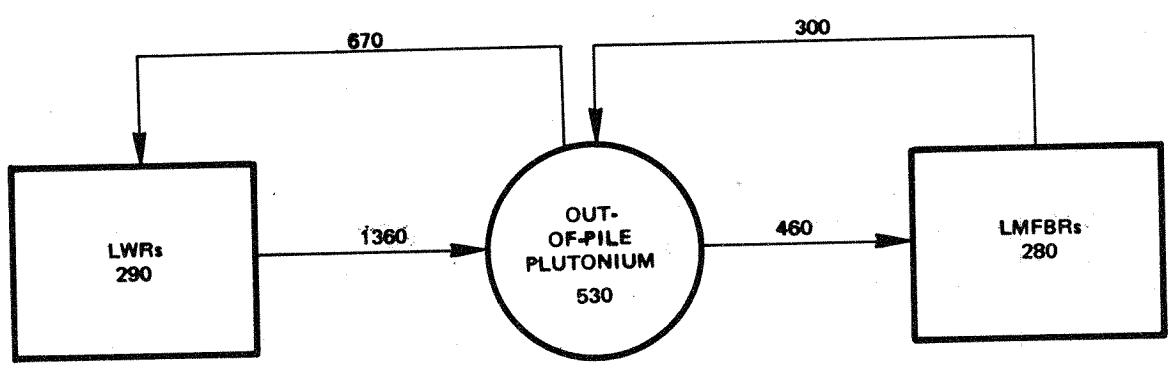

Figure 4-24 Prompt Plutonium Recycle Scenario

4.4.3.3 LIMITED RECYCLE SCENARIO. The LWRs in the previous Scenario were assumed to be dispersed. In this Limited Recycle Scenario (Figure 4-25), it is assumed that beginning in the late 1980's, most or substantially all of the new LWR construction occurs in integrated energy parks where there are reprocessing and fabricating facilities for the recycling of plutonium. Thus LWR recycle would occur only in the parks, and the existing dispersed LWR power plants would operate open cycle and store the spent fuel so it could be used later to fulfill breeder requirements.

The park reactors in this Limited Recycle Scenario use only self-generated plutonium and build up to self-generated recycle (SGR) equilibrium operation after about the first decade of operation. Details of the fuel cycle transients associated with such SGR parks are discussed later.

Because plutonium recycle is delayed in this Scenario, and because there is a period of spent fuel storage for the discharge from the dispersed sites, by 1999 not much LWR plutonium recycle has occurred, as can be seen from the plutonium flows. As a result, the 1999 total plutonium inventory is only a little less than in the no-LWR-recycle case of the AEC Forecast Scenario.

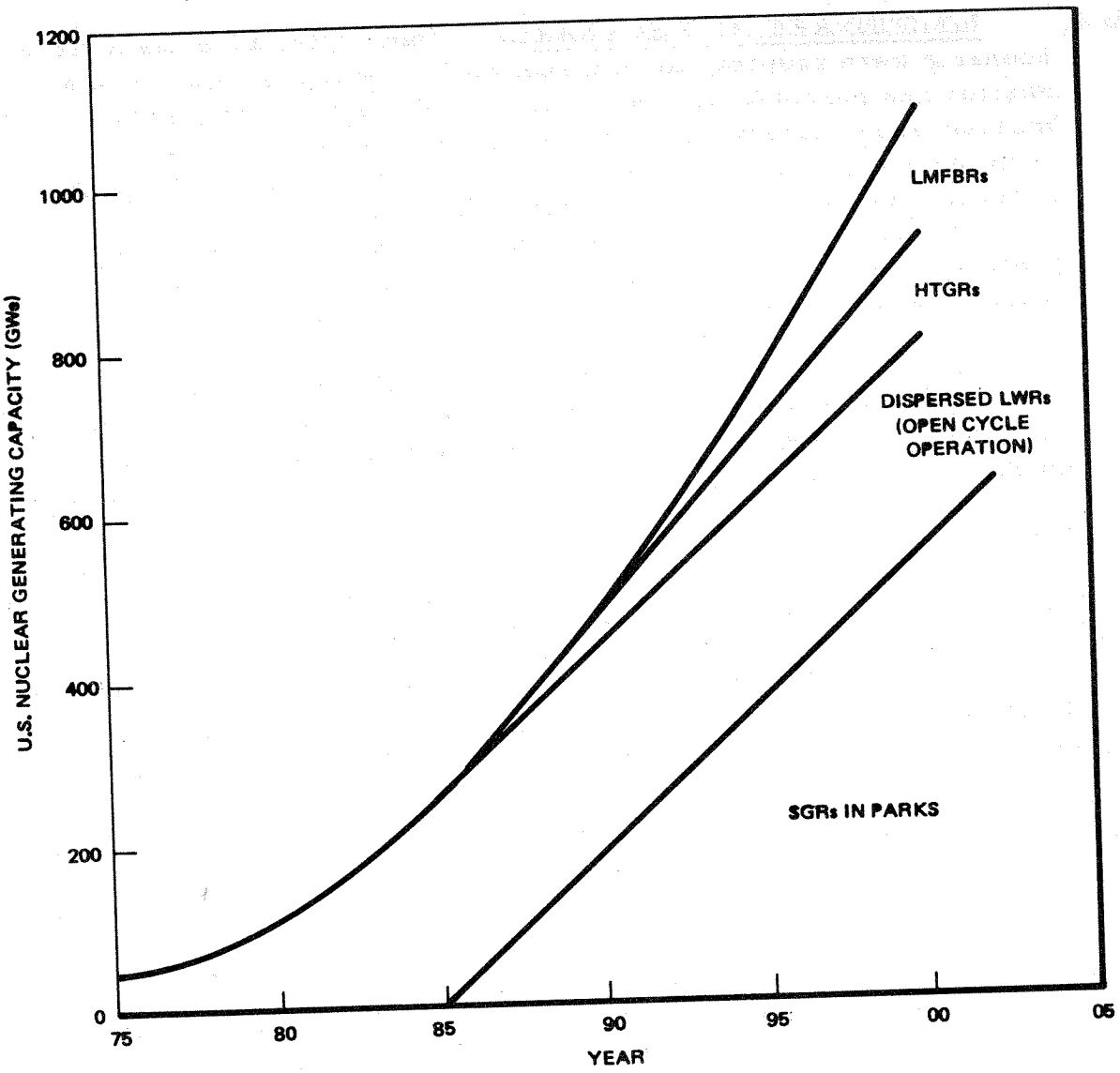

1999 CUMULATED FLOWS AND INVENTORIES, METRIC TONS FISSILE PLUTONIUM:

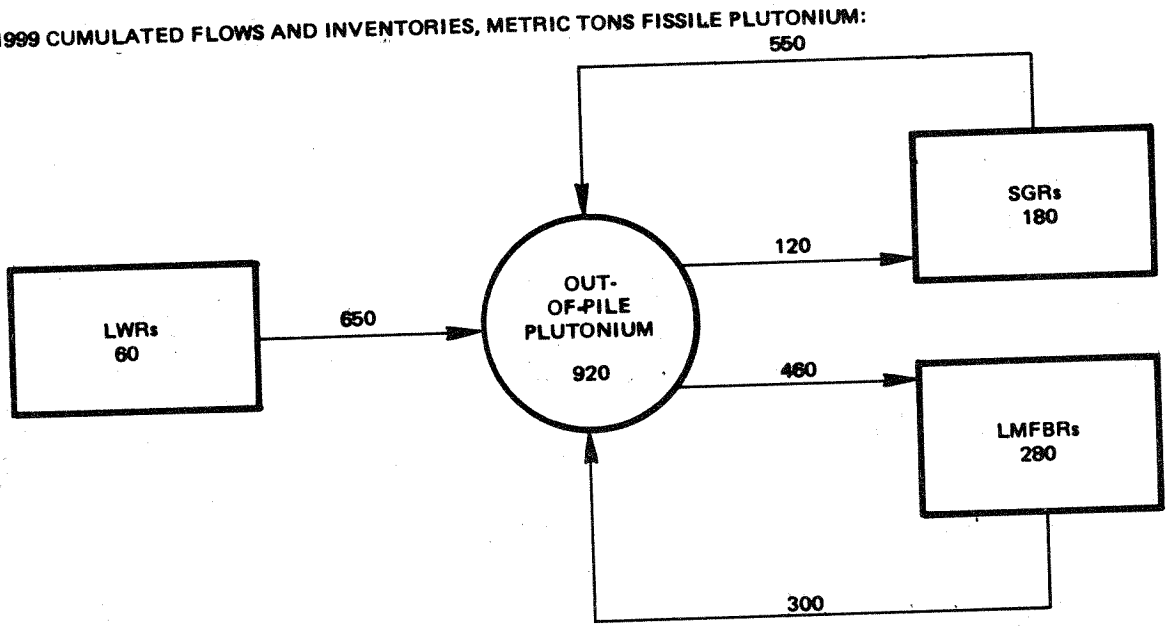

Figure 4-25 Limited Recycle Scenario

4.4.3.4 PuB SCENARIO. This scenario (Figure 4-26) assumes a more modest growth rate for nuclear electrical capacity, and a lessened role for gas reactors (HTGR). Also, it is assumed that the fast breeder is not introduced in this century. Further, the spent fuel from the dispersed LWRs reprocessed in energy parks and the recovered plutonium is used only in plutonium burning (PuB) reactors located in the park. The PuBs would be fueled only with MO_2 rods (no UO_2 rods) even in initial cores. Thus only relatively few such reactors would handle all the plutonium recycle.

The dotted line in Figure 4-26 represents the rate at which PuBs could be introduced, if limited only by the availability of plutonium in the LWR discharge. Since initial PuB cores and early reloads require considerable plutonium, substantial lead time in the start of reprocessing in PuB parks will be delayed until the late 1980's, and in the PuB Scenario it is assumed that reprocessing for the PuB plants is initiated in 1988 and the first PuBs are operational beginning in 1995 as shown by the stepped solid curve in Figure 4-26.

In the lower flow sheet of Figure 4-26, by 1999 much of the recovered Pu (640 out of 690 MT) has gone to create the PuB initial cores, while only 640-560 = 80 MT of fissile Pu has been burned. Thereafter the PuBs will increase slowly until the breeders enter the picture.

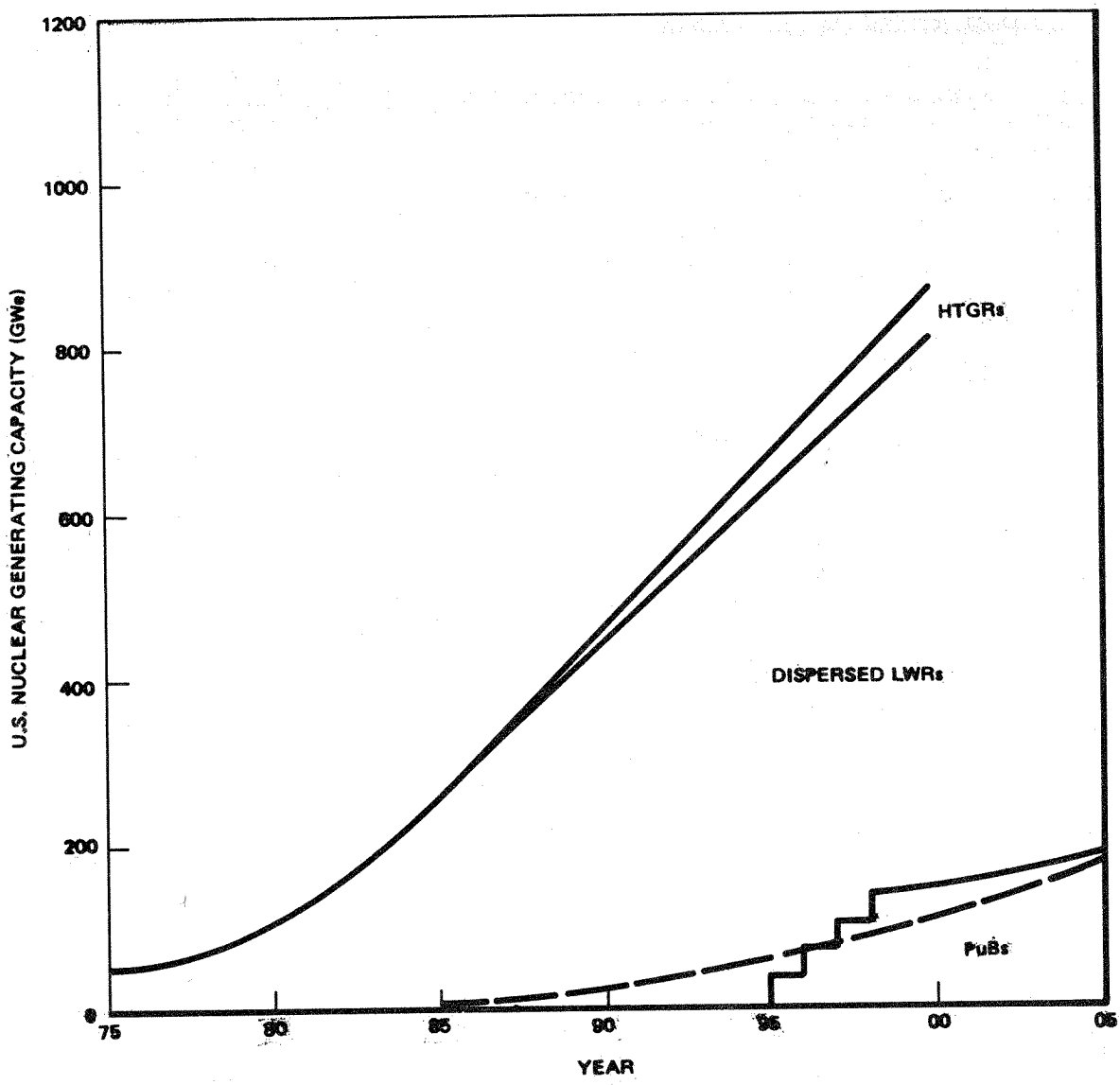

1999 CUMULATED FLOWS AND INVENTORIES, METRIC TONS FISSILE PLUTONIUM

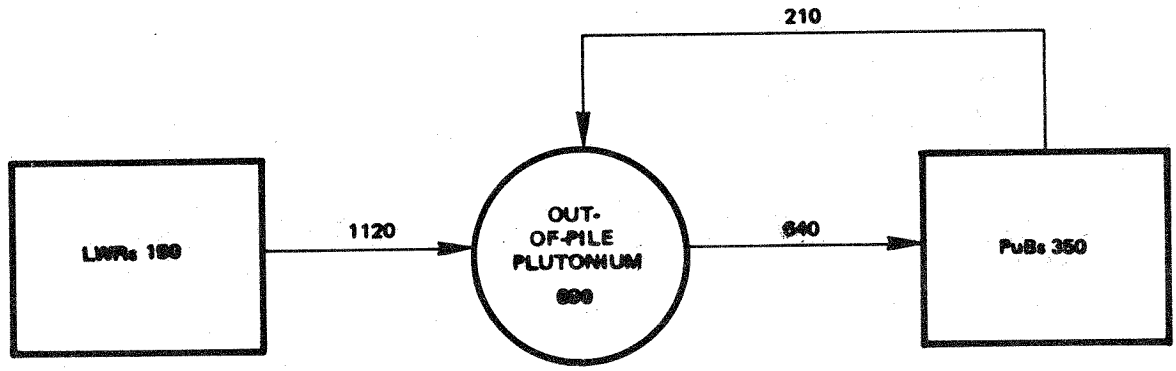

Figure 4-26 Plutonium Burner (PuB) Scenario

4.4.4 Facility Siting Relationships

4.4.4.1 CURRENTLY PLANNED DISPERSED FACILITY SITING. Some 120 nuclear sites are now committed in the United States, involving over 200 nuclear generating units (see Figure 4-27). These sites are located in nearly all (~ 40) states. Thus the dispersed mode of the nuclear generating industry is well established. The current status of the supporting facilities is summarized below.

Major enriched uranium fabrication facilities for commercial reactors exist at six sites:

Lynchburg, Virginia
Pittsburgh, Pennsylvania
Wilmington, North Carolia
LaJolla, California
Richland, Washington
Windsor, Connecticut

Fuel reprocessing facilities for commercial fuels have been sited, as shown in Figure 4-27 at three locations:

West Valley, New York
Morris, Illinois
Barnwell, South Carolina

but none is currently operating. Additional AEC (ERDA)-operated facilities exist at:

Richland, Washington (Hanford)
Idaho Falls, Idaho
Aiken, South Carolina (Savannah River)

for special fuels including HTGRs and LMFBRs.

High activity waste material disposal has been carried out or is under consideration at three sites, but again none is active now.

Plutonium enriched mixed oxide (MO_2) fuel fabrication, although pursued on a developmental scale at numerous national laboratories and industrial sites, has not yet reached commercial scale operations.

Commercial spent fuel storage exists at all reactor sites.

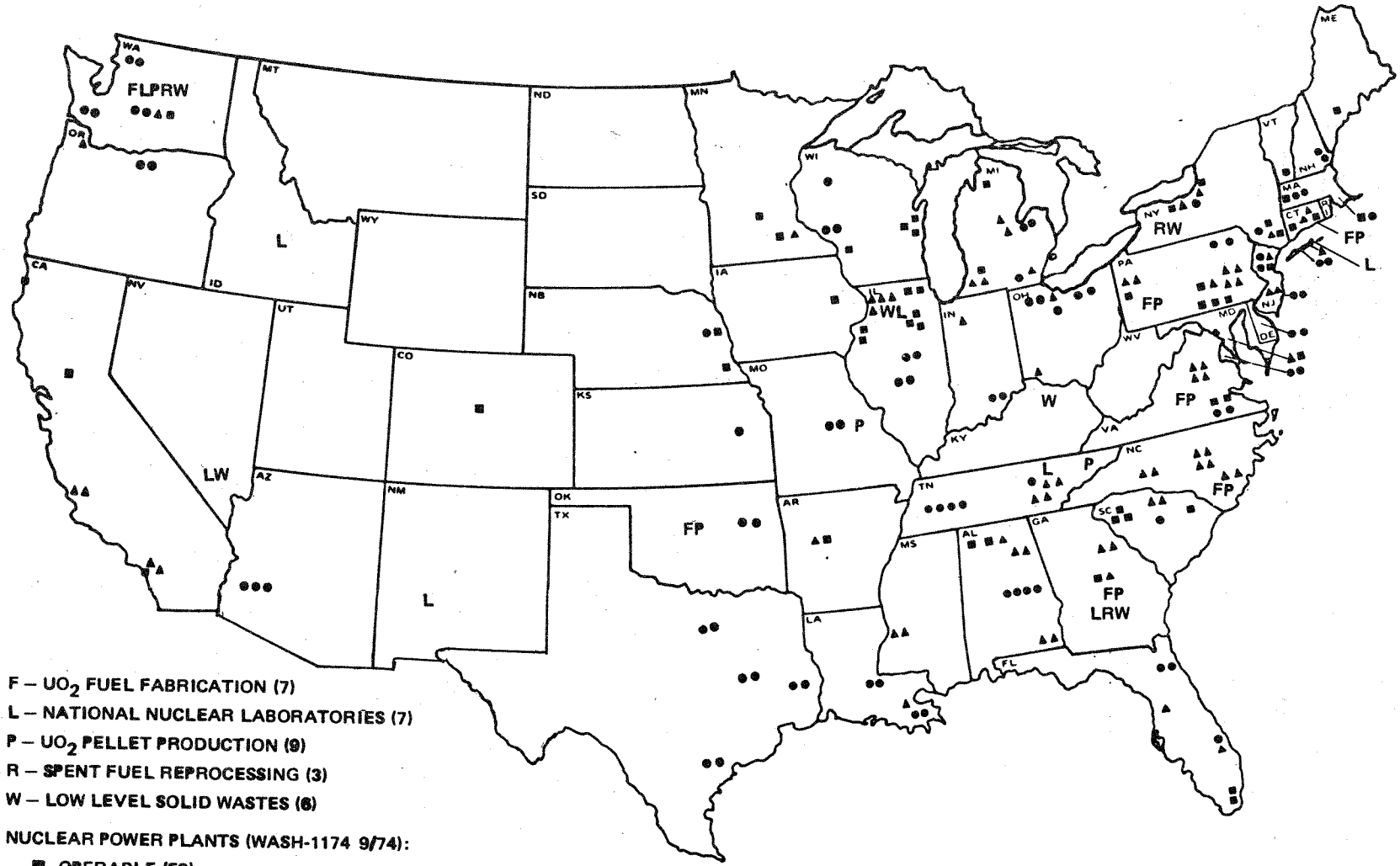

F – UO_2 FUEL FABRICATION (7)

L – NATIONAL NUCLEAR LABORATORIES (7)

P – UO_2 PELLET PRODUCTION (9)

R – SPENT FUEL REPROCESSING (3)

W – LOW LEVEL SOLID WASTES (6)

NUCLEAR POWER PLANTS (WASH-1174 9/74):

- ■ OPERABLE (52)
- ▲ BEING BUILT (69)
- ● PLANNED (100)

Figure 4-27 Operating and Planned Nuclear Facilities

This then is the status of the dispersal of currently-planned and operating nuclear sites and facilities across the U.S. It carries with it implications regarding transportation requirements, land utilization, demographic effects, and so on, the full significance of which will be in evidence by the mid-1980's. With regard to land utilization, the current commitment of nuclear sites (assuming 2000 acres per site including cooling provisions implies less than 300,000 acres or about 50 square miles) actually represents only a small fraction of the U.S. land area (~1%) potentially available for power plant siting.

From a transportation standpoint, the fueling requirements for the now-planned dispersed sites will call for perhaps one million ton miles/week compared to several billion ton miles/week for railroad coal shipments in the same late 1980's period.

4.4.4.2 IMPLICATIONS FOR INITIAL NUCLEAR PARK SITING. Whereas the total land use will be largely unaffected by the possible introduction of parks (leaving aside the separately-evaluated issue of transmission), the transportation aspects of the fuel cycle can and will be affected. In fact, since the present dispersed sites will undoubtedly continue to exist and can logically be integrated with possible park facilities (in a fuel-cycle sense) the specifics of the current locations could have a significant bearing on preferred park locations. For example, over 50% of all nuclear generation committed to date turns out to be concentrated in perhaps five regional locations of "nuclear powersheds" (see Figure 4-28):

1) New York (29 units)
2) Southeast (22 units)
3) New England (20 units)
4) Southern Great Lakes (18 units)
5) TVA (14 units)

Though each of these groupings is a relatively concentrated assembly, each extends typically over a band 200 to 300 miles long and 100 to 200 miles wide; i.e., each serves an area of typically 40,000 square miles. This might provide the basis for planning a series of very large Integrated Fuel Cycle Facilities (IFCFs) with up to 10,000 metric tons per year of processing capability.

Although these five major groupings may have no special significance insofar as specific future park siting potential is concerned, they can be used as an illustration model for analytical studies of future nuclear industry operation in a combined parks-plus-dispersed-site mode with respect to:

Figure 4-28 "Nuclear Powershed" Groupings

Spent Fuel Storage
Training Facilities
Spare and Renewal Parts
Trained Manpower for Future Construction/Operation
Lower Power Cost/Higher Load Growth

A step beyond the IFCF concept would be one in which all plutonium handling would be kept within park bounds - the Plutonium Burner (PuB) concept. Assuming either IFCFs or some form of PuB sites coupled to prior existing dispersed sites (as in the PuB Scenario), the results of the first stage of such a PuB site development would be that throughout all but the Western portion of the U.S., spent fuel shipping distances can be held to under 1000 miles and would average 250 to 500 miles (Figure 4-29). Adding smaller but more PuB sites might then further reduce average shipping distances. With several 500 MT/yr facilities instead of a few 10,000 MT/yr facilities, the total ton-miles of shipments might be reduced possibly a factor of 1/10.

The PuB site concept would permit the majority of the special nuclear materials handling to be within the confines of the site. No major impact from park or IFCF planning on disposal or storage of waste materials from the nuclear fuel cycle is anticipated. Shipping of high level wastes to some ultimate disposition location (as currently under study by ERDA) is assumed.

4.4.4.3 CONSIDERATION OF NON-LWR FUEL CYCLES. The foregoing discussion did not explicitly consider advanced converter system or the transition to breeder systems, although, in principle, the same park approach could be applied to each, with appropriate variances.

With respect to possible advanced converter systems potentially operating on a thorium cycle (such as the LWBR or the HTGR), potential variances are:

(1) Initial park siting flexibility may be greater in view of the limited facility commitments to improved converters at this time.

(2) The high enrichment of the initial and makeup fuel loading may make such fuel supplies a more significant factor and may add incentive for either onsite enrichment capability or preferred location adjacent to separative facilities.

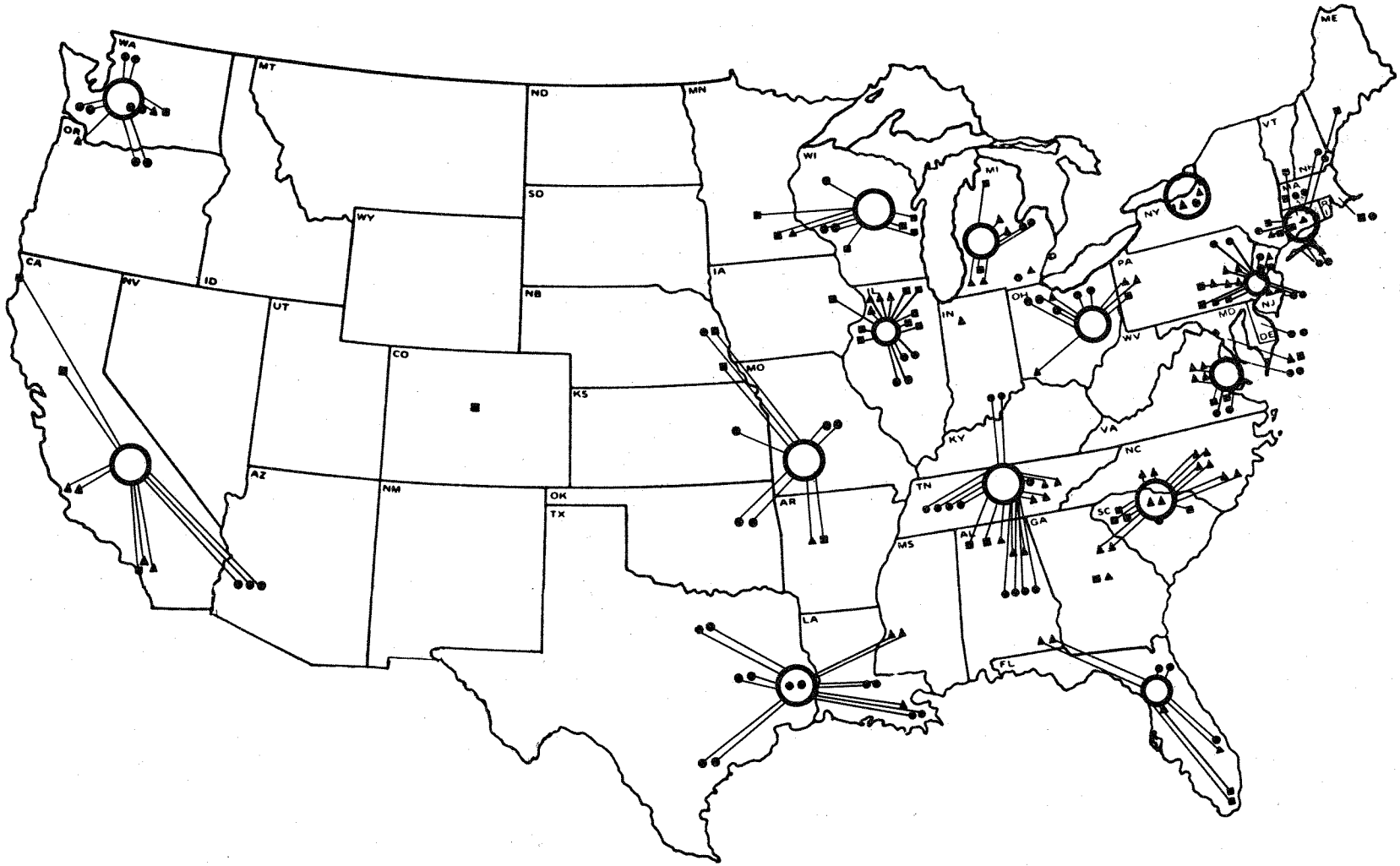

Figure 4-29 Potential First Stage PuB Development

In the case of the transition to breeder reactors, two options of interest have been identified:

(1) Schedule breeder construction at LWR parks at a later stage, recognizing some need for revamping (or new construction) of reprocessing and plutonium fabrication facilities for breeder fuel. This actually could be a major new undertaking, as most of the reprocessing and plutonium fabrication facilities for LWRs may well continue in use.

(2) Dedicate subsequent breeder sites, possibly adjacent to the LWR sites, such that they also can be self-contained regarding special nuclear material, at least following some initial special shipment of plutonium for the first core inventory.

4.4.5 Potential Dispersed Site and Park Configurations.

This section defines how the logistics of the reactor fuel cycle (discussed in section 4.4.2.3) would be affected by various assumptions as to how the fuel-cycle facilities could be coalesced or configured, particularly in terms of the location of the reactors relative to the reprocessing facilities, and the relationship between parks and dispersed reactor sites. Involved are considerations of shipments of fresh and spent fuel recycled uranium, and special nuclear materials (e.g. recycled plutonium). Also considered are various sizes of the energy park so that the scale of fabrication and reprocessing can be quantified and the consequences assessed. Finally, special attention is given to how the energy park concept interacts with the utilization of recycled plutonium.

4.4.5.1 FUEL CYCLE INTEGRATION. In the following, several cases are defined with respect to the degree to which the fuel cycle facilities or sites are coalesced. The cases are shown schematically on Figures 4-30 and 4-31.

Case O: Open Cycle Store-Away Operation. This corresponds to the current situation in which fresh fuel is shipped to the reactor site, burned in the reactor, and the spent fuel is held at the reactor site or shipped for storage at the site of planned reprocessing facilities. In this case there is no reprocessing of the spent fuel, no recovery of the fissile residues, and no recycle of the bred fissile material.

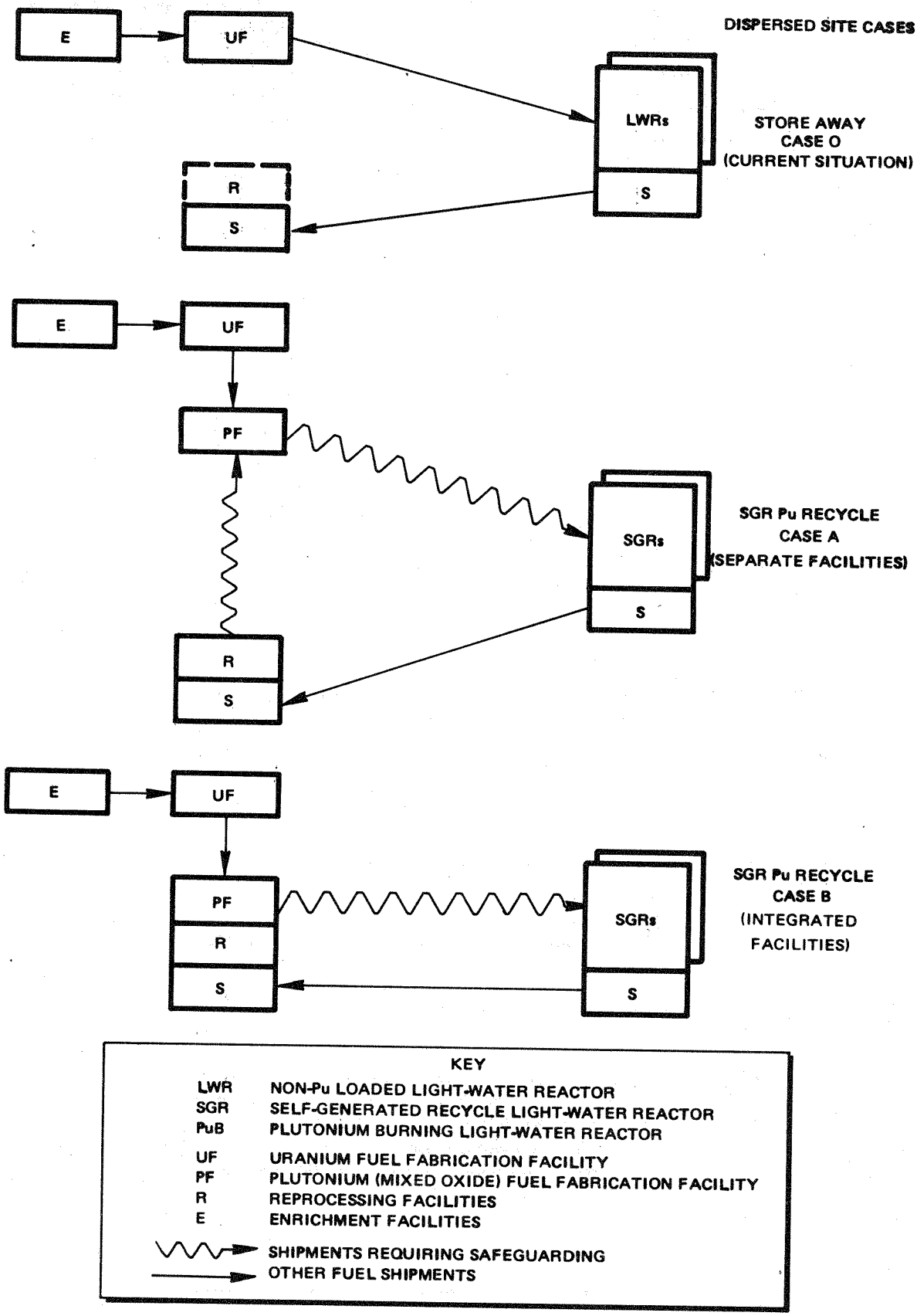

Figure 4-30 Identification of Dispersed Site Cases

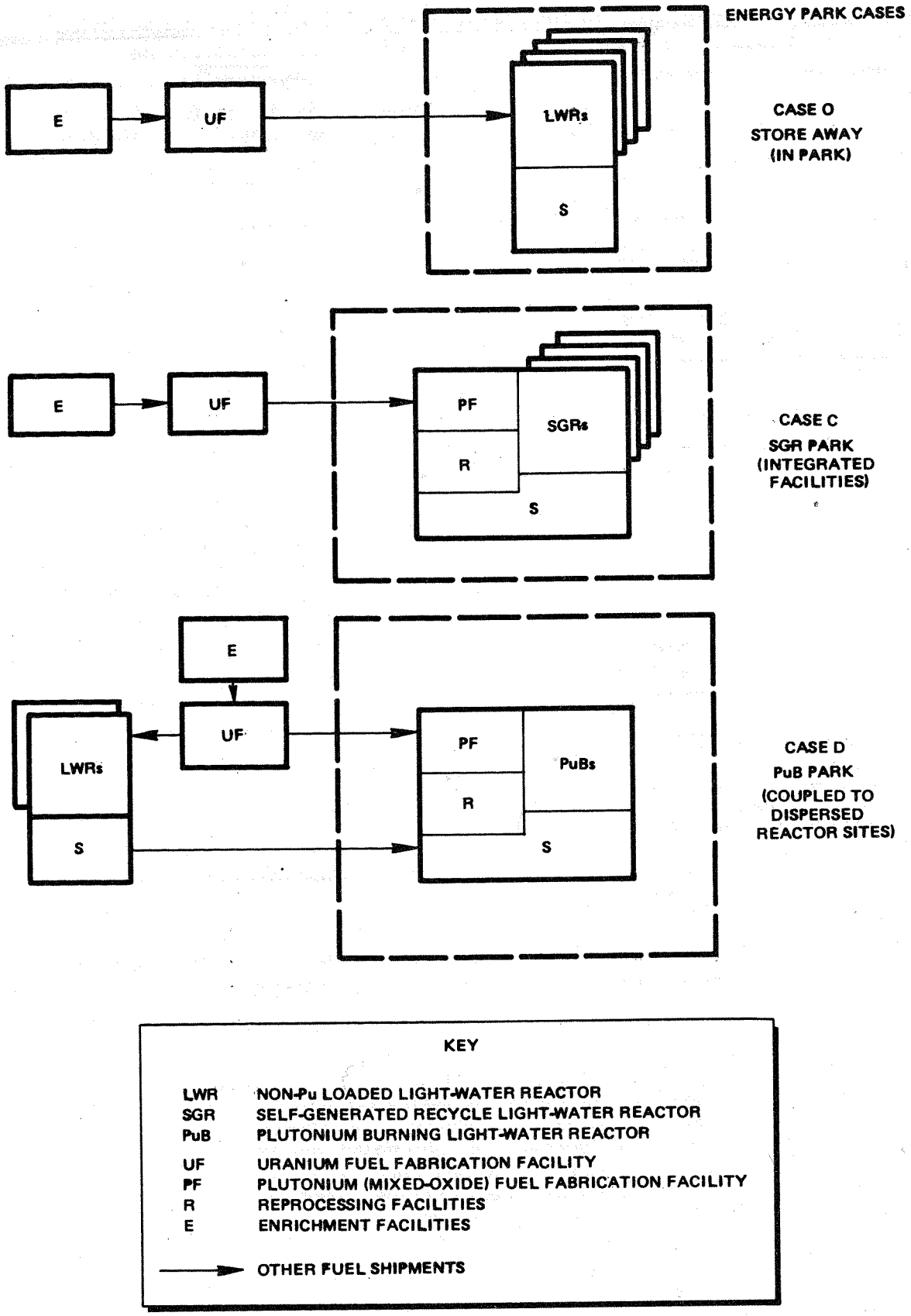

Figure 4-31 Identification of Nuclear Park Cases

Case A: Separate Reprocessing/Fabrication/Reactor Facilities. The spent fuel from the open cycle operation can ultimately be removed from storage, reprocessed and the recovered fissile material refabricated and recycled back to the reactors as showing in Figure 4-30 for the case of plutonium recycle. Similar cases could be depicted for the recycle of bred U-233 in the thorium cycle.

In Case A, continuous recycle of the recovered fissile material is assumed, involving shipments between the separate facilities. The spent fuel shipment contains some residual U-235, plutonium, and radioactive fission products. After recovery of the plutonium it is shipped to the mixed oxide fabrication plant where it is mixed with natural or depleted uranium and these mixed-oxide fuel rods are added to enriched uranium rods, and the completed fuel assemblies are shipped back to the reactor site. The reprocessing and fabrication facilities would typically service many dispersed reactor sites (not depicted on Figure 4-30).

Case B: Integrated Reprocessing/Mixed-Oxide Fabrication Facilities. Here the fabrication and reprocessing facilities are combined or integrated on a single site. This co-location eliminates the need for conversion of plutonium nitrate to a solid for offsite shipment of plutonium between these recycle facilities. This is significant particularly to costs because the plutonium in such a shipment is considered to be "special nuclear material" (SNM) that requires special safeguarding. The shipment to the reactor site of fuel assemblies containing mixed-oxide rods is still required in Case B.

Case C: LWR Energy Park. In this case the reactors and the reprocessing/MO_2 fabrication facilities are all located at an energy park. In such an integrated park, no offsite shipments involving plutonium are required to close the fuel cycle. All recovered plutonium is fabricated into fresh fuel assemblies together with make-up uranium supplied from offsite and returned to the reactors for re-exposure. Thus the reactors in the integrated park typically operate in the self-generated recycle (SGR) mode in which the amount of plutonium being exposed in the reactor is built up in successive reloadings until, in the equilibrium reloads, the rate of plutonium burning equals the rate of production from the conversion of the U-238 fertile material. Such an SGR park operates independently. It does not solve the matter of presently dispersed reactors, and the shipment and processing of spent fuel from them is still required.

Case D: Plutonium Burning (PuB) Park. In Case C the sizes of the recycle facilities were constrained by the fact that the facilities served only the reactors in the park, and that in the SGR mode of operation only about one-third of the fissile loading is plutonium. By contrast, in Case D it is assumed that the plutonium loading of the reactor has been increased substantially (all mixed-oxide) and that the increased plutonium exposure enhances the plutonium burning and permits the utilization of plutonium imported into the park from dispersed reactor sites or satellite parks operating on the open cycle. In this way, plutonium is shipped only with spent fuel and only into the park where it provides the fissile makeup loadings for the PuB reactors.

4.4.5.2 ENRICHMENT FACILITIES. In this study, it has been assumed that the enrichment plant and its supporting facilities are not necessarily incorporated into the LWR energy park site. The enriched uranium will be delivered to the park either in bulk or in rods or bundles. However, some major considerations for incorporating enrichment facilities in the nuclear park are discussed below.

Incentives. Nuclear material safeguards considerations while having little impact on low enriched light water reactor fuels could provide a significant incentive for co-location of an enrichment facility with HTGR power plant and associated fuel fabrication capability. Onsite utilization of a sizable block of electric power generation might be considered a significant incentive.

Size of Installation. A 26,000 MWe LWR park operating in a plutonium recycle mode is estimated to have an equilibrium refueling requirement of approximately one million kg SWU/year. For an enrichment plant operating with approximately 0.25% tails, the power requirements would be approximately 300 MWe if diffusion plant technology were utilized or perhaps 10% of this (i.e., 30 MWe) if a centrifuge installation were used.

Siting Requirements and Cost. While a one million kg SWU/year installation is probably uneconomically small for a diffusion plant, some idea of site area requirements may be provided by scaling down the USAEC's Data on New Gaseous Diffusion Plants (ORO-685, April 1972) for an 8.75 million kg SWU/year capacity which called for:

- Site area 300 acres
- Process buildings 50 acres
- Support facilities 25 acres
- Feed product and waste storage 7 acres

The costs for that present-technology facility were estimated at approximately $1.2 billion in June 1971 dollars.

Diffusion vs. Centrifuge for Parks. In practice, for the relatively modest scale of enrichment work visualized for parks presently under study, a centrifuge facility which is believed subject to different scaling laws than a diffusion plant may be more appropriate. Such a plant might be somewhat more compact in the process area, it would be optimized to be more capital intensive, and would generally have similar support requirements with potentially a greater nucleus of operating personnel.

Effluents. No significant new effluent or waste problem is believed to be brought to the site by the enrichment plant. However, virtually all of the required electrical load would be dissipated as additional waste heat at the site.

4.4.5.3 OTHER FUEL CYCLES. As mentioned, cases similar to those discussed above could be defined for other cycles such as the thorium cycle (HTGR or LWBR) or the fast breeder reactor (LMFBR). In the case of the thorium cycle, the LWR recycle facilities could not be used, so that there would be little incentive to mix the cycles in a park. Instead, a more likely event is that thorium/U-233 recycle would occur only in parks devoted solely to HTGRs. Shipments of highly enriched uranium would be required for the fissile makeup loadings.

Likewise, the recycling of LMFBR fuel might require separate facilities for reprocessing the LMFBR discharge. However, LWR spent fuel and associated reprocessing facilities in the park might be used to store plutonium that later could be used to provide the initial LMFBR inventories (see Case D' in Table 4-11). As the LMFBR fuel cycle became established, the light water reactors could be phased out.

4.4.5.4 FUEL CYCLE LOGISTICS. For the purpose of quantifying the logistics of the various fuel cycle integration cases, assumptions are made as to the characteristics of the reactors involved. Such data are presented in the following.

Reference Logistics Per 1000 MWe. The initial loadings and annual requirements of the equilibrium cycle are shown in Table 4-10 for various reactors, scaled to 1000 MWe of electrical output.

Data from the equilibrium LWR cycle is required under three assumptions; namely, that no plutonium is required in the fresh fuel

Table 4-10 - Typical Fuel-Cycle Data Per 1000 MWe Output (80% Capacity Factor; 0.25 Percent U-tails)

REACTOR COOLANT		LIGHT WATER						INERT GAS		LIQUID METAL
REACTOR TYPE		BWR			PWR			HTGR		FBR
INITIAL LOADING REQUIREMENTS										
HEAVY ISOTOPES	MT	111 (U)		111 (U)	80 (U)		80 (U)	32 (TH)		~ 50 (U)
FISSILE ISOTOPE	Kg	2246 (2.03 W/O U-235)		2884 Pu-f	1694 (2.11 W/O U-235)		2240 Pu-f	1387 (93 W/O U-235)		~2500 (Pu-f)
U_3O_8	ST	554		-	420		-	389		0
SEPARATIVE WORK UNITS	MT	219		-	170		-	322		0
EQUILIBRIUM FUEL CYCLE		OPEN CYCLE	SGR	PuB	OPEN CYCLE	SGR	PuB	OPEN CYCLE	RECYCLE U-233	BREED Pu
ANNUAL REQUIREMENTS										
HEAVY ISOTOPES	MT	31	31	31	28	28	28	7.6	7.6	~ 20
FISSILE MAKEUP	Kg	834 (U-235)	559 (U-235)	349 (Pu-f)	904 (U-235)	632 (U-235)	437 (Pu-f)	578 (U-235)	334 (U-235)	NONE
FISSILE RECYCLED	Kg	NONE	353 (Pu-f)	722 (Pu-f)	NONE	360 (Pu-f)	760 (Pu-f)	NONE	192 (U-233)	~1100 (Pu-f)
FISSILE SOLD	Kg	240 (U-235) 171 (Pu-f)	161 (U-235)	NONE	242 (U-235) 188 (Pu-F)	189 (U-235)	NONE	34 (U-235) 172 (U-233)	26 (U-235	~ 60 (Pu-f)
U_3O_8 ORE (NO U RECOVERY)	ST	175 (223)	117*	NONE	184 (235)	123*	NONE	153	86*	NONE
SEPARATIVE WORK UNITS	MT	102 (105)	68*	NONE	119 (124)	80*	NONE	127	72*	NONE

* NO ADJUSTMENT FOR REACTIVITY REDUCTION EFFECT OF U-236 IN RECYCLED U.

(open cycle), that fissile plutonium is in the fresh fuel to just the extent it is in the spent fuel (SGR), and that the fissile enrichment of the fresh fuel is only plutonium (PuB). The LWR Open Cycle and SGR data of Table 4-10 were inferred from industry sources (e.g., "FUEL TRAC" reports). The PuB data are extrapolations assuming constant burnup and all mixed-oxide loadings. The data for the HTGR, shown for completeness was inferred from published reports [19]. The LMFBR data are rough estimates.

Although it has been assumed in Table 4-10 that the transition to the LWR SGR mode begins with an initial enriched uranium core, plutonium could be used in the initial cores and early reloads as well. In the PuB case, it is assumed that only plutonium fissile loadings are involved, so that plutonium burning begins as soon as the PuB operates, although this requires that substantial reprocessing of open-cycle-produced spent fuel must precede the PuB reactor operation.

Equilibrium Logistics for Various Park Cases. The annual fuel-cycle logistics for various equilibrium cases is shown in Table 4-11. The cases are distinguished by the location and type of coalescing of the recycle facilities and by the number of 1300 MWe reactor units involved. For example, the case designation N4PC means four nuclear reactor units in a park, Case C. Similarly, N20DO refers to 20 nuclear units at dispersed sites, Case O. Table 4-11 will be referred to later in the discussion of the transient growth situation in parks.

Transportation. The transportation tonnages shown in Table 4-11 include the shipment from the enrichment plant to the fabrication facility and the return of reprocessed uranium for recycling through the enrichment process.

The transportation data of Table 4-11 become more meaningful if they are related to the paths in Figure 4-21 to better characterize the nature of the shipments. Such an analysis is shown in Table 4-12 for the 26000 MWe cases.

From Table 4-12 it can be seen that, with Case A as a base, the integration of reprocessing and fabrication in Case B eliminates the SNM shipment of plutonium, but otherwise the transportation picture

Table 4-11 - Annual Logistics - Equilibrium Fuel Cycles

Cases: O - Open cycle (store-away)
A - Dispersed facilities
B - Integrated facilities
C - Park Facilities
D - PuB facilities

Case "Type"		O	O	A	B	C	A	B	C	D	D	D	D'
Power generation		Dispersed Sites or Energy Parks		2 Dispersed Sites		Energy Park	10 Dispersed Sites		Energy Park	PuB Energy Park + Dispersed Sites or Satellite Parks			
Open Cycle Reactors	MWe	5200	26000	---			---			12100	18200	60500	104000
SGR Pu-Recycle Reactors	MWe	---	---	5200			26000			---	---	---	---
PuB Reactors	MWe	---	---	---			---			5200	7800	26000	26000
Total Power	MWe	5200	26000	5200			26000			17300	26000	86500	130000
Fuel Reprocessing and Recovery													
Heavy Isotopes	MT	---	---	146			728			484	728	2422	3640
Fissile U	MT	---	---	1.0			4.9			2.9	4.4	14.6	25
Fissile Pu	MT	---	---	1.9			9.4			6.2	9.4	31	39
Mixed Oxide Fuel Fabrication													
Heavy Isotopes	MT	---	---	44			218			146	218	728	728
Fissile Pu	MT	---	---	1.9			9.4			6.2	9.4	31	31
Discharged Fuel Storage													
Spent Fuel	MT	146	728	---			---			-----	---	---	---
Fissile Pu	MT	1.0	4.9	---			---			---	---	---	---
SNM Fissile Pu	MT	---	---	---			---			---	---	---	8.1
Required Off-Site Support													
Uranium Fabrication													
Heavy Isotopes	MT	145	728	102			510			338	510	1694	2912
Fissile U	MT	4.7	23.5	3.3			16.4			10.9	16.	54.7	94
U_3O_8 Ore	ST	970	4860	650			3250			2260	3400	11300	19400
Separative Work	MT	730	3640	470			2340			1700	2550	8470	14600
Fuel Reprocessing and MO_2 Fabrication		None	None	Separate	Integrated	Integrated	Separate	Integrated	Integrated	in PuB	in PuB	in PuB	in PuB
Transportation													
Heavy Isotopes	MT	437	2184	641	597	306	3204	2986	1530	1357	2040	6787	11657
Fissile U	MT	10.7	53.3	11.8	11.8	7.5	59	59	37.7	27.7	41.6	138	238
Fissile Pu	MT	1.0	4.9	5.6	3.8	---	28.2	18.8	---	2.3	3.4	11.3	19.6
Case Designation		N4DO N4PO	N20DO N20PO	N4DA	N4DB	N4PC	N20DA	N20DB	N20PC	N4PD	N6PD	N20PD	N20PD'

Table 4-12 - Characterization of Off-Site Fuel Shipments Per Year for 26,000 MWe

Path Fig. 4-21	Nature of Shipment	Case O			Case A			Case B			Case C			Case D		
		Heavy Isotopes MT	Fissile U MT	Fissile Pu MT	Heavy Isotopes MT	Fissile U MT	Fissile Pu MT	Heavy Isotopes MT	Fissile U MT	Fissile Pu MT	Heavy Isotopes MT	Fissile U MT	Fissile Pu MT	Heavy Isotopes MT	Fissile U MT	Fissile Pu MT
3	Enriched UF_6	728	23.5	---	510	16.4	---	510	16.4	---	510	16.4	---	510	16.4	---
	Fabricated Uranium Fuel	---	---	---	510	16.4	---	510	16.4	---	510	16.4	---	---	---	---
4	Fabricated Fuel Assemblies	728	23.5	---	728	16.4	9.4	728	16.4	9.4	---	---	---	510	16.4	---
5	Spent Fuel Assemblies	728	6.3	4.9	728	4.9	9.4	728	4.9	9.4	---	---	---	510	4.4	3.4
6	Bulk Plutonium and UF_6	---	---	---	218	---	9.4	---	---	---	---	---	---	---	---	---
7	Depleted UF_6	---	---	---	510	4.9	---	510	4.9	---	510	4.9	---	510	4.4	---

is changed. Case D further reduces the shipment of plutonium (less in the spent fuel and none in the fabricated fuel). Finally, in the fully integrated energy park concept, Case C, the shipment of uranium is minimized and no spent fuel or plutonium is shipped at all.

4.4.6 Fuel Cycles in Typical Parks.

4.4.6.1 TRANSIENT APPROACH TO MATURITY IN SGR PARKS. At maturity, an SGR park is assumed to contain from four to twenty 1300 MWe, light-water reactors operating in the self-generated plutonium recycle mode in which all discharge plutonium is returned for recycle in the reload fuel assemblies. Initially, each reactor is started up with U-235 enrichment only (no plutonium is charged into the reactor). The plutonium-containing spent fuel is stored and later reprocessed on the site to recover the plutonium which is then fabricated into mixed-oxide fuel rods.

Although plutonium recycle could begin by gradually substituting available mixed-oxide fuel for the U-235 enriched fuel, this would require onsite reprocessing and mixed-oxide fabrication to be introduced into the expanding park too early for full utilization. Therefore, the spent fuel would likely be stored, and plutonium recycle would begin when the reprocessing and fabrication facilities could be in full operation - about midway through the reactor growth transient (see Figures 4-32 and 4-33). The output of these facilities would then provide plutonium-containing reloads that would convert the reactors to operation in the equilibrium SGR mode.

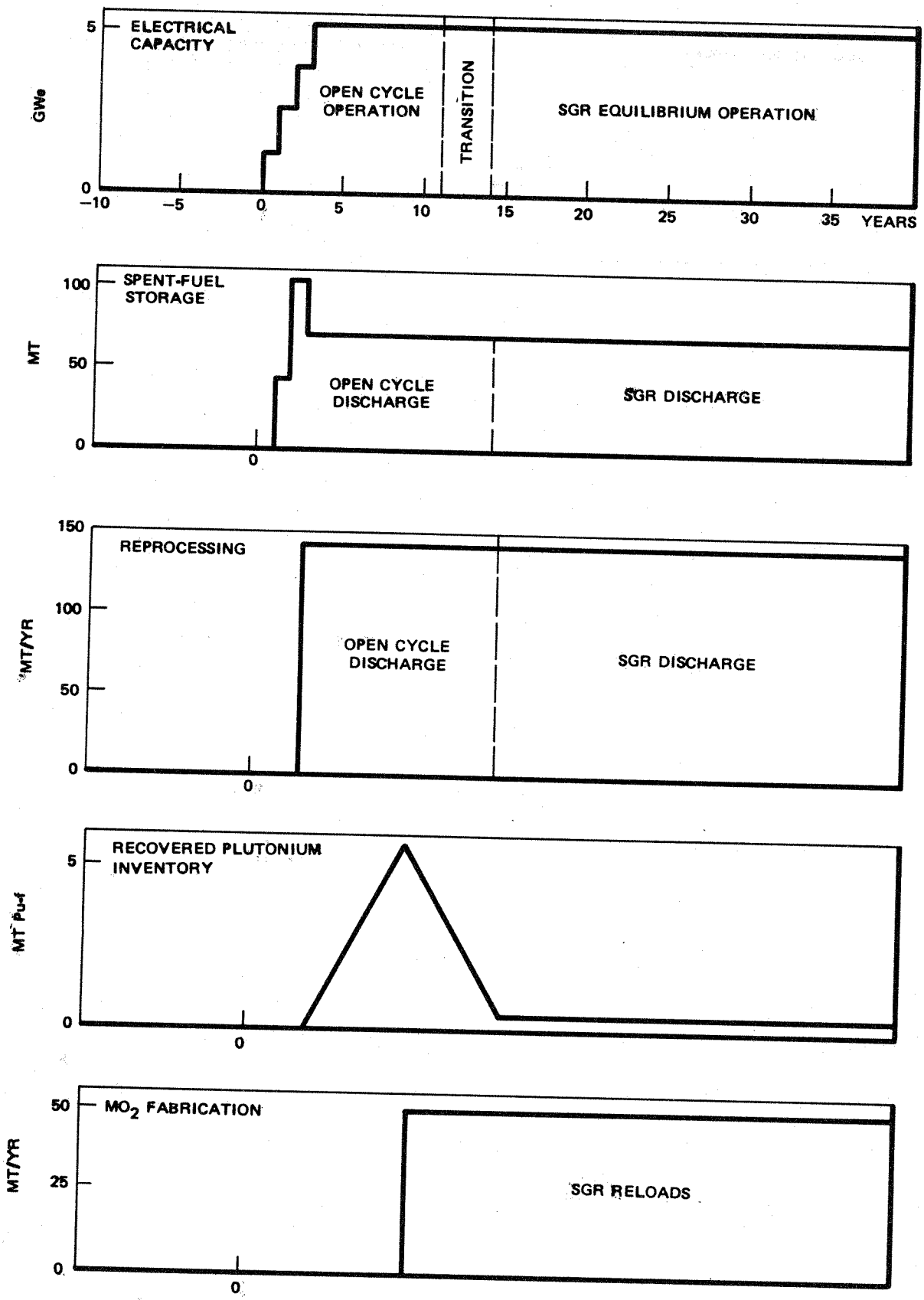

Figure 4-32 Fuel Cycle Transient In a 4-Unit SGR Park (Case N4PC)

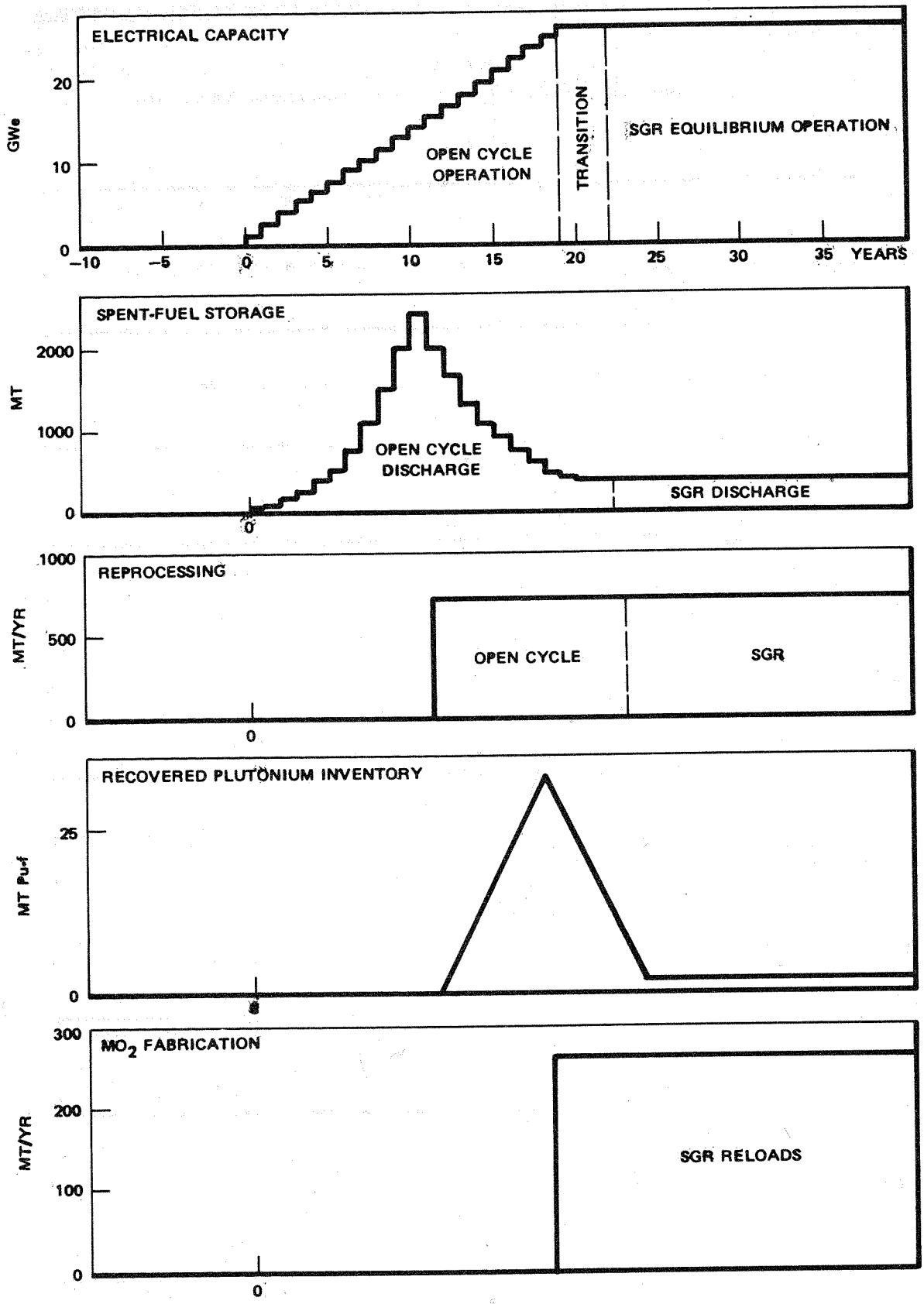

Figure 4-33 Fuel Cycle Transient In A 20-Unit SGR Park (Case N20PC)

The capacities of the recycle facilities shown in Figures 4-32 and 4-33 are determined by the requirements of the equilibrium conditions given in Table 4-11. The timing of the facilities is governed by the plutonium logistics associated with the reactor growth schedule and the characteristics of the reactors operating in the open cycle and in the SGR mode derived from Table 4-10. For example, at 80% capacity factor, approximately 8 years of open cycle operation will generate enough plutonium to fuel the SGR-type annual reloads. Another 3 years of operation with these reloadings is required before SGR discharges are available. Allowing about 2 years for out-of-pile processing, it is therefore about 13 years before the equilibrium SGR mode is established.

In the case of the 20-unit SGR park of Figure 4-33, some spent fuel storage is required during the open cycle operation in the period before the introduction of the reprocessing plant - the peak storage requirement is equivalent to the discharge from about two years mature park operation. For both SGR park sites, there is also an accumulation of recovered plutonium in the interval preceding the startup of mixed oxide fabrication. These storages would be reduced if the reprocessing and fabrication facilities were introduced in stages.

4.4.6.2 TRANSIENT APPROACH TO MATURITY IN PuB PARKS.

Figures 4-34 and 4-35 depict the growth transient in 4-unit and 20-unit PuB parks, respectively. At maturity, the PuB park is coupled to about 230% as much dispersed generating capacity as is in the PuB park itself, reflecting the ratio between the plutonium makeup requirements of a PuB reactor and the plutonium content of a dispersed reactor operating open cycle as given in Table 4-11. The ultimate sizes of the reprocessing and fabrication facilities is determined by the mature park requirements shown by the equilibrium data of Table 4-10.

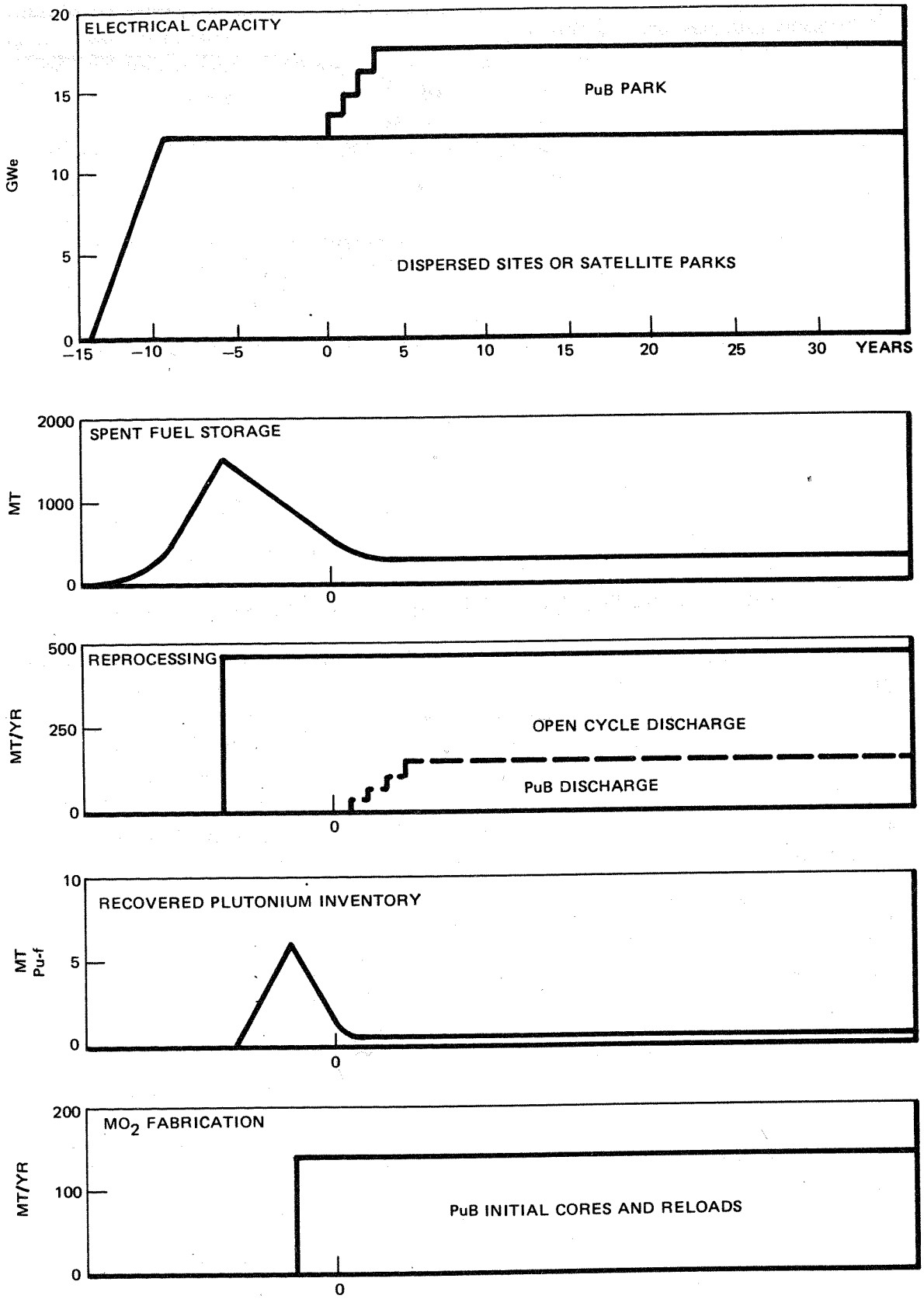

Figure 4-34 Fuel Cycle Transient In A 4-Unit PuB Park (Case N4PD)

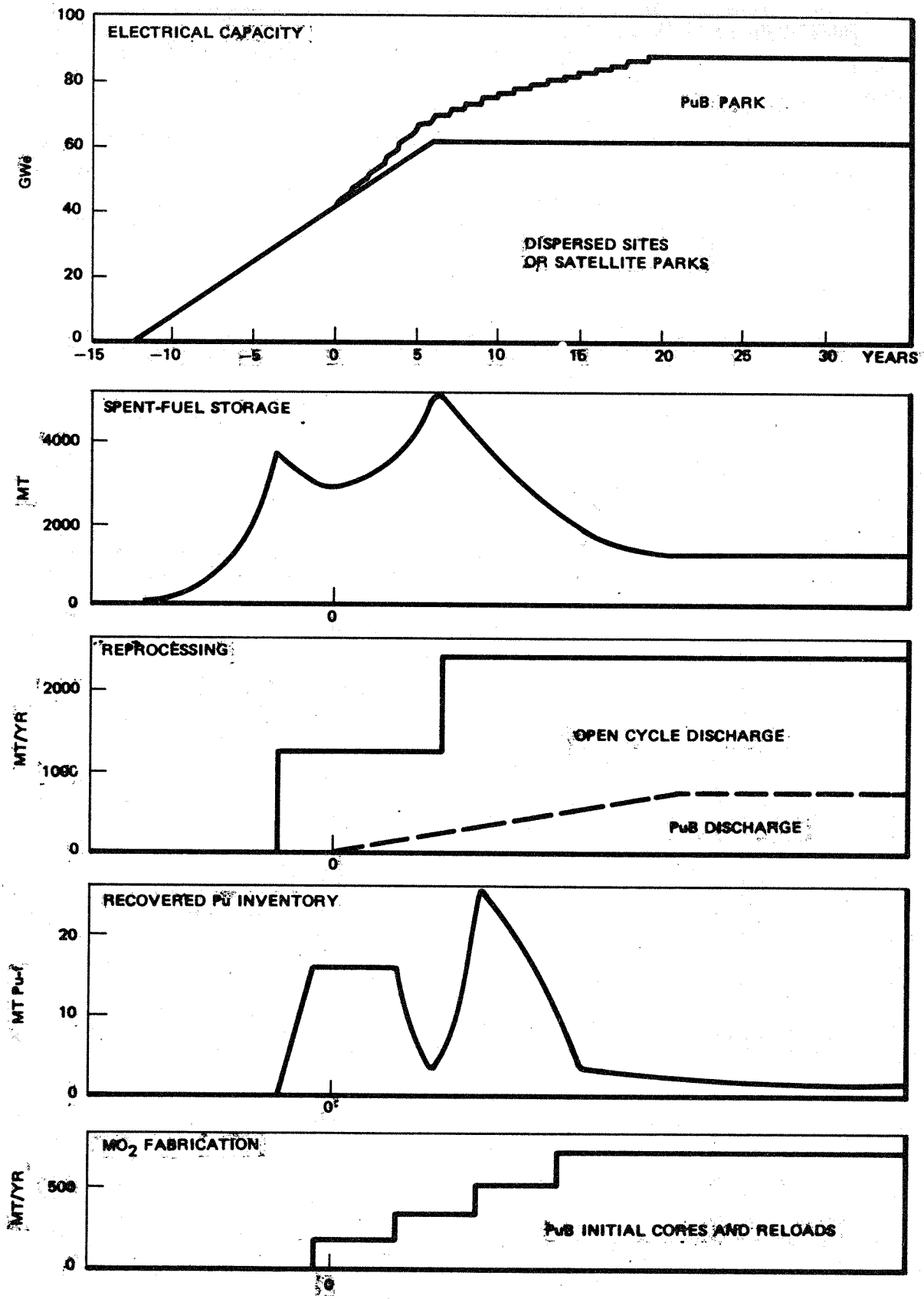

Figure 4-35 Fuel Cycle Transient In A 20-Unit PuB Park (Case N20PD)

The timing of the facilities is constrained by the plutonium logistics. Since it is assumed that the initial PuB core as well as the reloads are mixed-oxide fueled, the reactor growth in the PuB park must be preceded not only by dispersed site open cycle operation, but also by reprocessing and MO_2 fabrication facilities. Staged construction of the recycle facilities is required for the 20-unit PuB park. As was the case for the SGR parks, there will be periods of accumulation of spent fuel and recovered plutonium, the latter requiring special safeguarding.

4.4.7 Summary and Conclusions.

Electrical generating capacity in the U.S. is expected to continue growing at a faster rate than total energy consumption. Nuclear energy growth is expected at even a larger rate, slowing down by the end of the century as nuclear energy becomes the major source of power for electrical generation.

Nuclear growth will place heavy demands on the uranium ore supply, and eventual rises in ore prices will increase the incentive for ore-conserving options such as plutonium recycle in light water reactors, and fast breeder reactors fueled with plutonium. However, the breeder reactor is not expected to have a significant impact in the next few decades, and major facilities to implement LWR plutonium recycle are not in place. Therefore, the current and near-term situation will likely be characterized by the storage of spent fuel; that is, the fuel cycle will not soon be closed to a significant degree.

Fuel cycle economics do not currently mitigate strongly against a storage mode of LWR operation in view of the now expected high cost of the fuel reprocessing and mixed oxide fabrication required for plutonium utilization. This is shown in Table 4-13 which reflects today's cost assumption as given in Table 4-14. In Table 4-13 it is seen that in spite of storage costs and lack of recovered fissile credits, overall fuel costs are not significantly different from those expected with plutonium recycle or in non-plutonium loaded LWRs. This would not be true if fuel cycle assumptions made as recently as 1970 were used as shown in the Tables.

Such a storage mode would have to be temporary to be consistent with the synergism of LWR's supplying plutonium for breeders. Also, thorium cycle reactors (e.g., HTGR and LWBR) are basically dependent on recycle, although ERDA has a current policy of buying spent fuel from gas reactors. (This policy expires at the end of 1977, but may be extended in some form through 1983 [5].)

Table 4-13 LWR Fuel Cycle Costs With and Without Pu Recycle

COST COMPONENT	CONTRIBUTION TO COST (¢/MBtu)#			
	STORE AWAY	PLUTONIUM RECYCLE	PLUTONIUM SALES	
FRESH FUEL				
URANIUM ORE	12	8	12	6*
CONVERSION AND ENRICHMENT	10	7	10	6*
PLUTONIUM	-	2	-	-
FABRICATION	6	11	6	2*
SPENT FUEL				
STORAGE	4	-	-	-
SHIPMENT, REPROCESSING, WASTE STORAGE	-	6	6	1*
RECOVERED FISSILE CREDITS	-	(2)	(2)	(2)*
TOTALS	32	32	32	13*

#1975 DOLLARS, NO ESCALATION OF COSTS.
OTHER ASSUMPTIONS: EQUILIBRIUM CORE OPERATION AT 80% CAPACITY FACTOR, 0.25 W/O TAILS, 8% INTEREST AND PRESENT WORTH FACTOR, 16% FIXED CHARGE RATE, UNESCALATED.

*USING 1971 ESTIMATED COSTS FROM REFERENCE 1, Pu VALUE $7/g VS. PRESENTLY ASSUMED $4/g FISSILE.

Table 4-14 - LWR Fuel Cycle Cost Assumptions

COST COMPONENT		VALUES USED (1975 $)	
		PRESENT STUDY	1971 ESTIMATE[1]
FRESH FUEL			
URANIUM ORE	$/lb$U_3O_8$	13	7
CONVERSION	$/kgU	3	2
ENRICHMENT	S/kgSWU	42.5	26
PLUTONIUM	$/g	3 to 6*	7
FABRICATION	$/kg$UO_2$	112	42
	$/kg$MO_2$	350	
SPENT FUEL			
STORAGE	$/kgU/YR	10	-
TRANSPORTATION	$/kgU	10	45
REPROCESSING	S/kgU	160	
WASTE HANDLING	$/kgU	40	

* Indifference values

In terms of parks vs. dispersed generation, there is little impact from a storage mode because the safeguard risks are not great, although if parks are later to have reprocessing facilities, the spent fuel storage facilities might be located in the park.

With the advent of plutonium recycle in LWRs, the impact of the park, in terms of advantages it may offer with respect to safeguarding and environmental risks, depends on whether there are dispersed recycle facilities (little impact from parks) or whether the recycle facilities are combined or integrated to reduce interplant plutonium shipments, particularly if these integrated facilities are at the park so that no offsite shipment of even fabricated plutonium is required.

A scenario in which plutonium recycle (self-generated mode) takes place only in nuclear parks indicates that the reprocessing facilities would be underutilized unless delayed during park growth and would be of very small ultimate capacity unless the park was very large.

Better matchups were found in a scenario in which, following a period of spent fuel storage from nearby dispersed sites, reprocessing was begun in advance of reactor operation in the park. Light water reactors operating as plutonium burners (PuB) would then come on line in the park and consume the plutonium backlog. Thereafter the PuB plutonium requirements would come into equilibrium with the plutonium generated in coupled dispersed site LWRs and shipped to the park for plutonium recovery and burning.

Operating LWRs are not necessarily capable now of operating in the all-plutonium PuB mode, so some design changes likely would be needed. Further studies of the characteristics of such burner reactors are needed.

Subchapter Contents

		Page No.
4.5	NUCLEAR FUEL REPROCESSING	4-109
4.5.1	Introduction	4-109
4.5.1.1	TASK OBJECTIVES	4-109
4.5.1.2	AVAILABLE RESOURCES	4-109
4.5.1.3	KEY ISSUES	4-114
4.5.1.4	METHOD OF EVALUATION	4-120
4.5.2	Bases and Assumptions -- Fuel Reprocessing	4-121
4.5.2.1	GENERAL	4-121
4.5.2.2	REGULATORY	4-121
4.5.2.3	FUNCTIONAL REQUIREMENTS	4-123
4.5.2.4	PROCESS AND PLANT DESIGN CONSIDERATIONS	4-130
4.5.3	Reference Concepts -- Fuel Reprocessing	4-136
4.5.3.1	GENERAL DESCRIPTION	4-136
4.5.3.2	SPECIFIC CONCEPTS	4-139
4.5.3.3	CONCEPTS FOR REPROCESSING OTHER THAN LWR FUELS	4-142
4.5.4	Costs and Schedules -- Fuel Reprocessing	4-143
4.5.4.1	GENERAL RELATIONSHIPS	4-143
4.5.4.2	SPECIFIC COST PROJECTIONS	4-148
4.5.4.3	PROJECT SCHEDULES	4-155
4.5.5	Conclusions and Recommendations	4-155

4.5 NUCLEAR FUEL REPROCESSING

4.5.1 Introduction

4.5.1.1 TASK OBJECTIVES. In evaluating feasibility and economic viability of nuclear energy parks, consideration must be given to facility requirements and costs for providing necessary fuel cycle support services including those for disposition of spent fuel discharged from the energy-producing reactors. Because discharged fuel contains highly radioactive fission products as well as fissionable material (unspent uranium and plutonium formed during irradiation), engineered facilities must be provided either to (1) recover the materials of value for subsequent recycle and consolidate the radioactive wastes for ultimate disposal or (2) store the discharged fuel for later reprocessing or indefinitely if the cost of reprocessing exceeds the net value of the recoverable products (Figure 4-36).

For integrated facility installations and for comparative dispersed siting cases as well, investment requirements for such "back end" fuel cycle facilities are small compared to those for the reactors they serve and the contribution of necessary spent fuel disposition services to overall power generation costs also is small. However, these factors may differ between energy park and dispersed site cases and will vary within the range of park types, capacities, and arrangements that are of potential interest. In fact, onsite reprocessing and recycle may not be viable for smaller capacity parks where facilities sized to match local reactor needs only would have unit capital and service costs which are several times those of more nearly optimum sized plants.

The primary objective of this task, then, is to provide input data on fuel reprocessing for the overall evaluation of nuclear energy park resource requirements, economics, environmental impact, etc. To develop such data, it is necessary to (1) forecast the functional, regulatory and operational requirements that will apply to future commercial fuel reprocessing plants in general, (2) define representative plant concepts which meet these requirements for each of the selected study cases, and (3) project plant facility and operating costs, implementation schedules and other factors of significance to the overall evaluations.

4.5.1.2 AVAILABLE RESOURCES. A number of studies have been published on nuclear fuel cycle facilities and operations required to support projected growth in power reactor installations [1, 2, 8]. Relatively firm bases have been available for these studies in regard to LWR power station UO_2 fuel supply considerations but there have

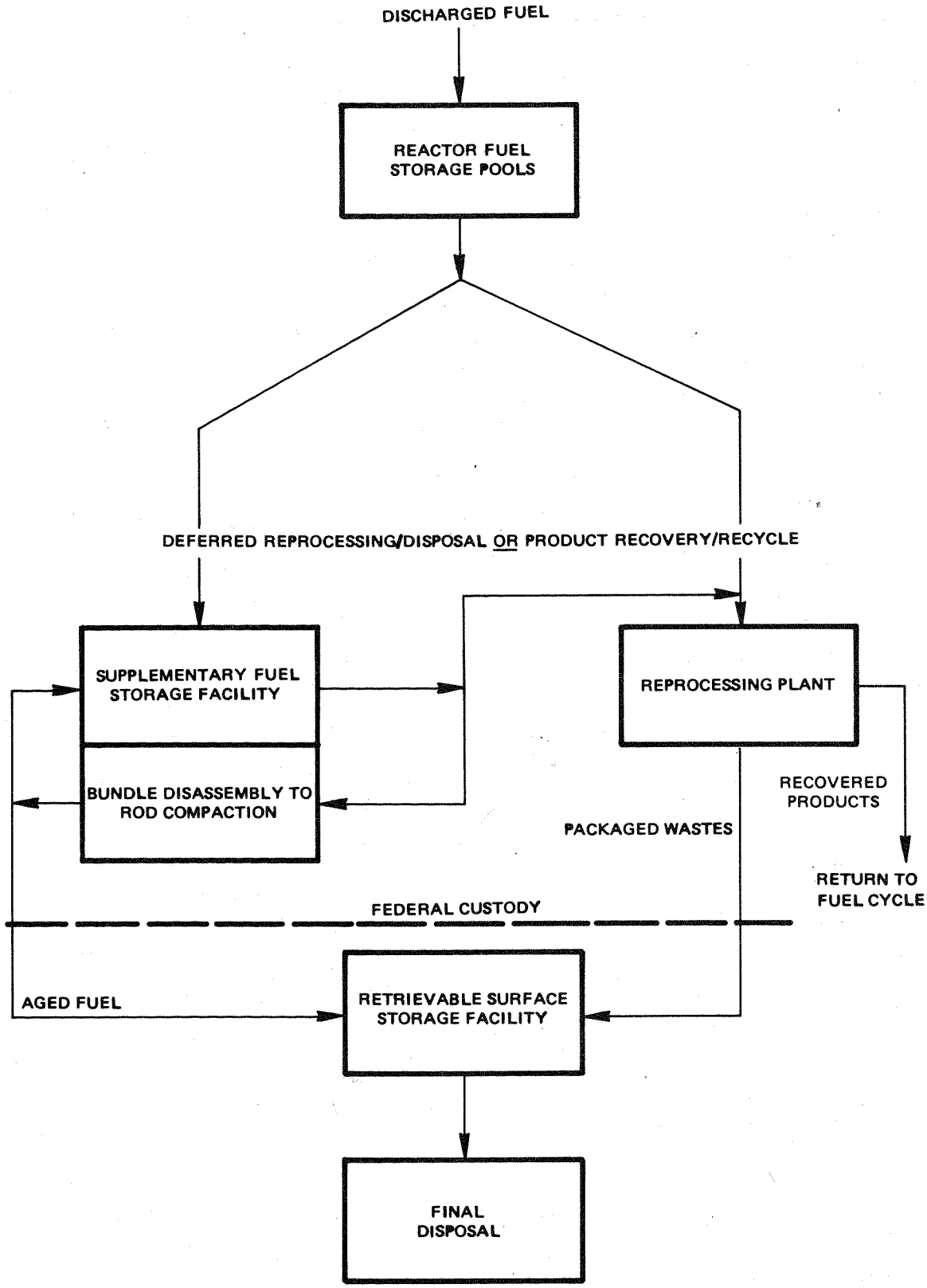

Figure 4-36 Alternatives For Disposition of Spent Fuel

been little or no production-scale data on commercial fuel reprocessing, Pu recyle (MO_2) fuel fabrication, radioactive waste management and associated transportation functions. Thus requirements and costs in these areas have had to be derived from general parametric analyses, the results of which are noted to be inconsistent with most recent commercial plant experience and trends.

For fuel reprocessing in particular, extensive information on radio-chemical separations process and systems technologies is available from USAEC facility operations and supporting programs but commercial plant flow sheets and facility design features will differ substantially from those of USAEC installations because of differences in spent fuel feed characteristics, recovered product forms, economic objectives, etc. as well as the considerably more restrictive regulations being developed for application to commercial plants. Thus, general projections based primarily on prior USAEC facility experience provide useful input to this study but additional information sources must be utilized to develop projections of specific conditions and requirements that will apply to commercial reprocessing plants in the time period of interest.

Actual commercial plant project experience to date in the U.S. is limited to the Nuclear Fuel Services, General Electric, and Allied General Nuclear Services (AGNS) installations described in Table 4-15 and Figure 4-37, none of which are in operation at this time. All three have been designed to reprocess spent fuel from LWR power stations for recovery of U and Pu in useful forms. All are based on the same general body of available technology but vary significantly in process and design details due to differences in initial functional objectives as well as changing conditions over the differing project schedules. In particular, there have been changes in regulatory policies and requirements in the course of these projects which have had substantial impact on plant facilities and operations and a number of areas of potential regulatory action likely to have further impact remain to be resolved. Also recent project experience has indicated unanticipated trends in design and construction costs for highly engineered facilities built to the exacting safety, environmental protection, operability and quality assurance requirements applicable to commercial reprocessing plants. Detailed design and cost data have not been published for these projects but such information as is available must be utilized in this task. In particular, cognizance must be taken of AGNS plant investment requirements (most recently announced as approaching $500 million) in projecting future reprocessing facility costs.

Table 4-15 - U. S. Commercial Spent Fuel Reprocessing Plants

PLANT NAME	WEST VALLEY REPROCESSING PLANT	BARNWELL NUCLEAR FUEL PLANT	MIDWEST FUEL RECOVERY PLANT
DOCKET NO.	50201	50332	50268
OWNER	NUCLEAR FUEL SERVICES, INC.	ALLIED-GULF NUCLEAR SERV.	GENERAL ELECTRIC COMPANY
SITE	WEST VALLEY, NEW YORK, 30 MILES SOUTH OF BUFFALO.	BARNWELL, SOUTH CAROLINA, EAST SIDE OF SAVANNAH RIVER PLANT.	MORRIS, ILLINOIS, SOUTH SIDE OF DRESDEN NUCLEAR POWER STATION.
STATUS	PROCESSED 630 MTU 1966-1970. EXPANSION AND HARDENING BY ~1979.	SCHEDULE STARTUP 7/76. SPENT FUEL STORAGE ONE YEAR EARLIER.	CONSTRUCTED 1967-74, DISCONTINUED FOR OPERABILITY PROBLEMS. BEING MODIFIED FOR FUEL STORAGE ONLY 1975.
CAPACITY	300 MTU/YR 1966-1970 750 MTU/YR EXPANSION	5 MTU/D, 1500 MTU/YR (LESS FOR HIGHER ENRICH.)	REPROCESS 1 MTU/D, 300 MTU/YR. STORE 90 MTU AS IS.
FUELS	LOW ENRICHMENT LWR UO_2 OR PuO_2-UO_2; HIGH ENRICHMENT EQUIPMENT BEING REMOVED; THORIUM-URANIUM OXIDE POTENTIAL.	LOW ENRICHMENT LWR, 3.5% U-235 OR 29 KG FISSLE Pu PER MTU, 40,000 MWD/T AVERAGE 160 DAYS DECAY.	LOW ENRICHMENT (5% U-235) LWR, UO_2 OR PuO_2-UO_2.
PROCESS	PUREX (TRIBUTYL PHOSPHATE IN KEROSENE-LIKE SOLVENT).	PUREX WITH PROPRIETARY FEATURES.	AQUA-FLUOR (PUREX AND U FLUORINATION).
PRODUCTS	Pu NITRATE, UF_6	PuO_2, UF_6, NP NITRATE.	UF_6, Pu AND NP NITRATES.
WASTE FORMS	OFFGAS STACK, HARDWARE VAULT, LIQUID TANKS.	OFFGAS STACK, HARDWARE VAULT, LOW ACTIVITY TANKS, HIGH ACTIVITY TANKS.	OFFGAS STACK, HARDWARE VAULT, LOW ACTIVITY TANKS, HIGH ACTIVITY SOLIDS IN CANS IN POOL, DRY CHEMICALS (FLUORIDES) VAULT.

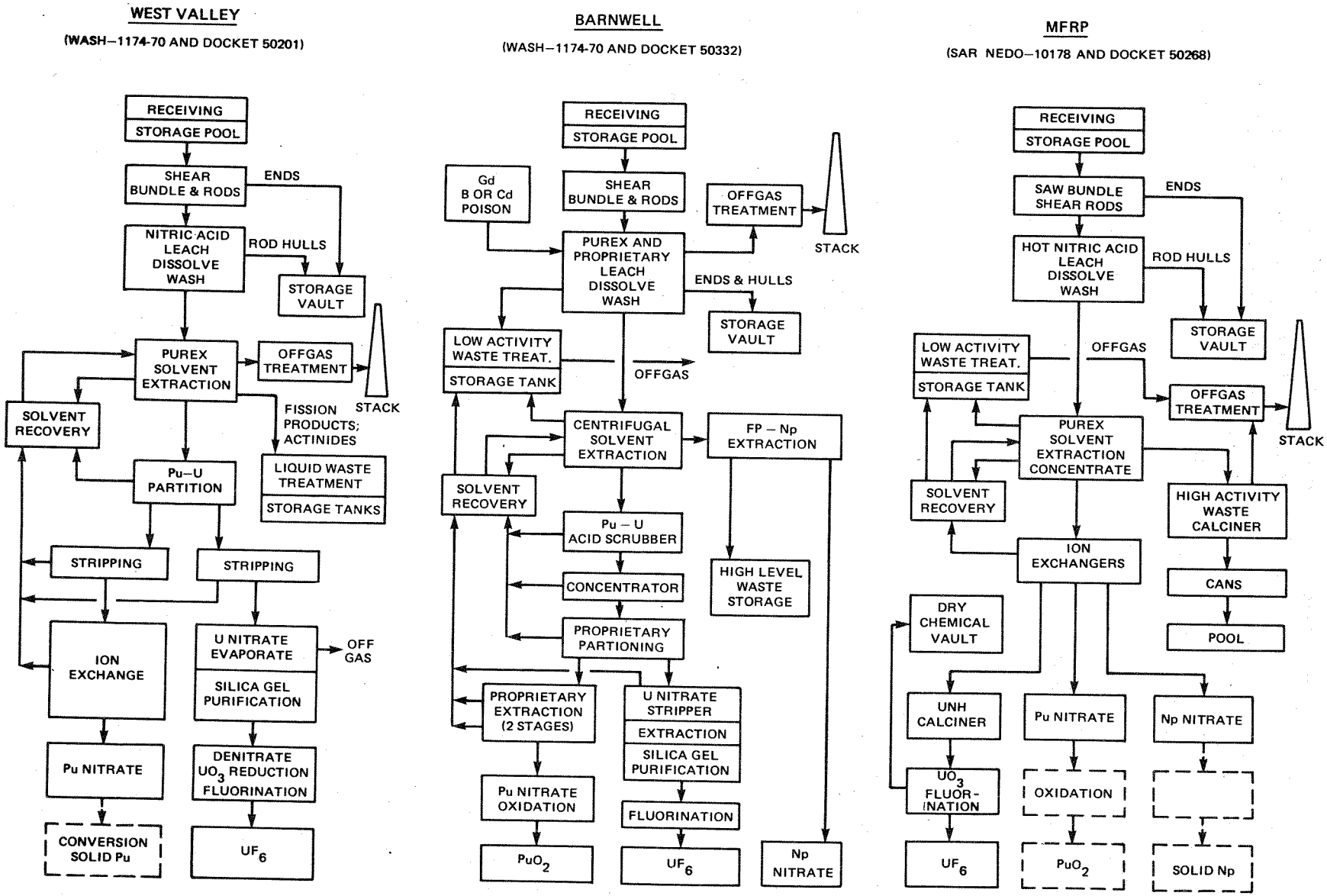

Figure 4-37 Fuel Reprocessing Plant Flowsheets

Finally, significant prior work has been done on potential nuclear energy park configurations including consideration of reprocessing plant support requirements [9, 21]. Results of these studies are of considerable value but, in regard to reprocessing, it is noted specifically that most recent trends in facility requirements and costs are not reflected therein.

For the present task, latest information available from commercial plant projects as well as from various industry and government agency publications on regulatory trends, design concepts, implementation costs and colocation* effects has been utilized to provide suitable input data for evaluation of the alternative energy park study cases selected for consideration.

4.5.1.3 KEY ISSUES. The following three issues are of particular significance to task objectives:

(1) Regulatory Requirements in the Time Period of Interest
(2) State of the Reprocessing Business
(3) Plant Project Considerations

Regulatory Requirements in the Time Period of Interest. As noted earlier, regulatory policies and constraints applied to fuel reprocessing have a substantial impact on facility requirements and costs. Thus study conclusions may be affected significantly by the assumptions made regarding future policies and constraints.

Regulations in effect during early consideration of commercial plant licensability were written primarily for assuring LWR safety. As more attention has been given to regulatory requirements specifically for reprocessing facilities and operations, it has become apparent that prior experience in licensing the three U.S. commercial plants does not provide completely sound precedent for future installations. Necessary regulatory approvals for construction and initial operation of the NFS plant were obtained in the early 1960's. Since that time, detailed requirements have been established in such areas as design safety, waste management, environmental protection and nuclear materials safeguards which the NFS plant as originally built could not meet and the plant has been shut down since 1972 for necessary modifications and additions.

* "Colocation" in this context means fuel reprocessing and fabrication facilities located on the same site, in contrast to other contexts where "colocation" means adjacent industries using the power or process heat from the nuclear plants.

The GE-MFRP plant was granted a construction permit in 1967 and the operating license application proceeded through ACRS (Advisory Committee on Reactor Safety) review and notification by the AEC in 1972 of intent to issue an operating license. However, the plant was not started up because of process system operability problems and it now appears from most recent regulatory actions and trends that the as-built plant would not be considered licensable in the time frame of interest without modifications and additions in certain areas (e.g., transuranium-contaminated waste consolidation and packaging). The MFRP construction permit was terminated and a license for operation only as a storage facility for irradiated fuel was issued in August 1974.

The AGNS plant was most recently granted a construction permit and is now ~ 90% complete. It too was subject to modification in the course of detail design and construction as additional regulatory requirements evolved (Pu conversion, waste segregation and treatment, etc.) and there still are uncertainties in regard to ultimate requirements remaining to be resolved (transuranium-contaminated waste management, high level waste fixation, safeguards and physical protection, etc.).

In regard to current actions and trends, amendments proposed in September 1974 to 10CFR50 "Licensing of Production and Utilization Facilities" which would add appendices on "General Design Criteria for Fuel Reprocessing Plants", and on "General Criteria for Protection of Fuel Reprocessing Plants and Licensed Material Therein" finally were published early in 1975. These criteria are intended to establish minimum requirements for protection of public health and safety for the range of operating and accident conditions of particular concern in fuel reprocessing facilities and operations rather than requiring interpretation of reactor criteria.

The general safety criteria having direct effect on facility designs and costs (multiple confinement barriers of demonstratable integrity, resistance to seismic and wind forces, maintainability of safety-related systems, nuclear criticality safety, process control and alarm, effluent control and monitoring, etc.) apply to energy park as well as dispersed site cases but impact on unit investment and operating costs will vary with plant capacity over the range considered. These criteria may be further expanded and refined with time but are not expected to be escalated to the extent that reactor safety criteria have been since they were first established.

The particular criteria on proximity of nuclear facility sites and on sharing of facilities among plants on the same general site are

likely to receive additional attention in view of regulatory agency interest in colocation and functional integration (e.g., reprocessing and Pu fuel fabrication plants) to facilitate fissile material control and waste management. In response to U.S. Congressional action, a special study group has been set up by the AEC (announced 12/74) to identify sites for regional nuclear energy centers including multiple nuclear power plants and possibly spent fuel storage and reprocessing, new fuel fabrication, and uranium enrichment facilities as well. This study, now being directed by the U.S. Nuclear Regulatory Commission (NRC), will also consider safeguards measures related to Pu recycle, and the feasibility of establishing a Federal security agency to protect nuclear facilities against sabotage and nuclear materials against theft. Results of this and follow-on studies are likely to have substantial impact on future regulations, which in turn may affect the relative merits of the alternative cases considered here but probably not to a very great degree.

A major uncertainty is in regard to ultimate regulatory requirements for radioactive waste management which will affect reprocessing plant facilities and operations (waste collection, segregation, treatment, packaging and onsite retention) as well as overall fuel cycle considerations (Federal agency charges for acceptance, interim storage, conversion and final disposal) as discussed in section 4.7. The present policy and regulations set forth in 10CFR50, Appendix F "Fuel Reprocessing Plant Siting and Waste Disposal" address only high activity wastes (those from a first cycle of solvent extraction in a fuel reprocessing plant, or equivalent) and are based on the concepts of: short term ($<$ 5 years) accumulation of such wastes as liquids at the reprocessing plant; conversion to solid; and direct shipment to a Federally-operated salt mine repository within 10 years after generation. Since Appendix F was issued, AEC plans changed to call for shipment of high activity wastes from reprocessing plants to a Federally-operated Retrievable Surface Storage Facility for interim retention while publicly acceptable provisions for "permanent" disposal are being developed and implemented [15]. The additional handling and storage steps involved with this approach have led to consideration of specific solid waste form and/or final treatment process requirements [10] beyond those called for in the present regulations. Also included in the final disposition alternatives being considered is separation of the very long-lived actinide (transuranium; Am, Cm, etc.) constituents from the bulk of the high level fission product wastes to reduce the volume requiring permanent isolation from the biosphere. This alternative would necessitate a substantially different (and considerably more costly) approach to reprocessing plant waste management than has been considered in any facility designs to date.

In regard to other than high activity level wastes, previously published regulations have not included clearly defined management requirements but there has been continuing concern in regard to ultimate disposition of lower level wastes containing very long-lived alpha emitters such as certain of the Pu isotopes from irradiated fuel. In late 1974, the AEC published a proposed amendment to 10CFR20 "Standards for Protection Against Radiation" which would require that waste material containing or contaminated with transuranium elements be solidified and packaged for transfer, as soon as practicable after generation and within 5 years, to the AEC or its successor agency which would be responsible for subsequent storage, treatment and disposal, and would levy a fee on the generator of the waste to cover all costs for such activities. Because of the very low level of alpha activity proposed as the basis for classifying wastes as transuranium-contaminated (significantly below practical detection limits), virtually all process wastes from fuel reprocessing plants would fall in this category. Thus, the final form in which this regulation is issued will have substantial impact on future reprocessing plant facilities, operations and associated costs.

Another area of current regulatory action affecting the various energy study cases is in regard to spent fuel storage. Requirements applicable to reactor station and reprocessing plant facilities for hold-up of fuel awaiting reprocessing are covered in existing regulations. However, in recognition of the fact that commercial reprocessing capability is unlikely to keep up with spent fuel availability, a proposed Regulatory Guide 3.24 entitled "Guidance on the License Application, Siting, Design and Plant Protection for an Independent Spent Fuel Storage Installation" was issued in January 1975 to cover the larger capacity, longer retention facilities not previously anticipated as being necessary. Requirements proposed therein are such that even these spent fuel storage facilities will be highly engineered and relatively expensive. This will impact on projected costs for certain study cases of potential interest and may affect conclusions regarding the relative merits of immediate onsite reprocessing versus accumulation of spent fuel for deferred processing or "throwaway", i.e., permanent disposal without U and Pu recovery and recycle. To date there has been no authoritative indication as to regulatory policies or requirements in regard to a throwaway fuel cycle.

State of the Reprocessing Business in the Time Period of Interest. Apart from potential energy parks having their own dedicated support facilities, current and projected LWR reactor station installations would require four or more additional reprocessing plants of 1500 MTU/yr capacity in operation by 1990 to accommodate the available spent fuel load (Figure 4-38). Because fissile Pu is more difficult to protect and possibly more expensive to store after recovery and cleanup than when still in the irradiated fuel, it is likely that these reprocessing capacity additions will not be scheduled for operation until facilities are available for utilizing the recovered products (i.e., Mixed Oxide fuel fabrication plants). As discussed in section 4.6, regulatory policies related to MO_2 fuel are just now being developed and regulations applicable to fabrication and utilization of such fuel are not expected to be in place before 1977. Lead times for fuel design selection and qualification and for fabrication facility design, construction and licensing are such that production quantities of recovered Pu will not be in demand for recycle until about 1986. In the meantime, discharged fuel will have to be stored unreprocessed. If Pu recycle is permitted and necessary regulations are then established, reprocessing capacity still may not be added rapidly to match available load because:

- Fuel reprocessing is inherently a capital intensive business requiring significant price/cost ratios to justify investment.

- Regulatory trends appear certain to increase the cost of reprocessing and associated transportation and waste management functions and also to reduce the value of reprocessing services (by increasing the cost of recovered product utilization).

- Recovered product value will vary with the price of the all-UO_2 fuel alternative (virgin uranium feed and separative work).

- Economic justification for reprocessing also will be affected by the cost of the "throwaway" alternative.

Therefore, commitments required to provide additional reprocessing service capability on a commercial basis are likely to be delayed until the impact of deferred reprocessing on uranium suppy and enrichment, UO_2 fuel fabrication and spent fuel storage becomes apparent and the alternative throwaway cycle is evaluated under those conditions. For the present study, this issue affects the dispersed site case to which the LWR energy parks are compared and, to some extent, the assumptions made as to availability of demonstrated

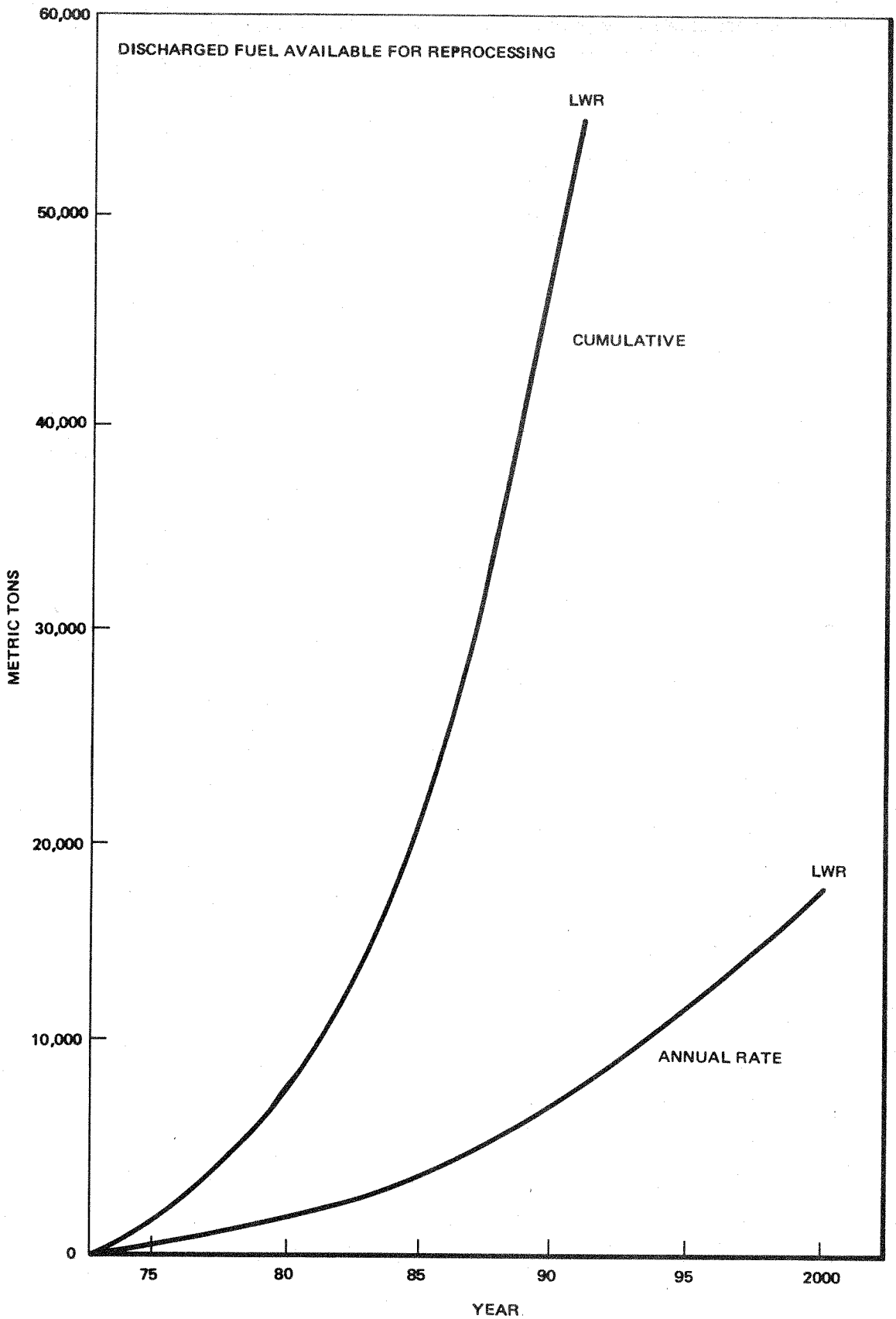

Figure 4-38 Discharged Fuel Available For Reprocessing

process and plant design technology on which optimized energy park reprocessing plants could be based.

Commercial HTGR and LMFBR fuel reprocessing is even farther in the future. The scope and timing of AEC (ERDA) programs for developing necessary technologies, as well as probable difficulties in the transition of such technologies to industry, indicate that reprocessing plants to support energy parks using these types of reactors could not be built in the time frame of interest. For the breeder reactor fuel cycle in particular, practical provisions for rapid return of recovered Pu to the fuel cycle as required to achieve reasonable doubling times are likely to take almost as much effort to develop and demonstrate for commercial application as the reactor systems themselves. Current indications are that industry will be participating in and contributing to support program direction and implementation but detailed plans and schedules on which to base projections have not yet been defined.

Plant Project Considerations. Unit costs for implementation of reprocessing plant design and construction projects have substantial impact on this task and on overall study conclusions. Based on published information, projected costs for plants of a given size increased by more than a factor of four between 1970 and 1974. Much of this increase was due to additional functional requirements and unanticipated escalation rates. However, recent experience with material shortages, price jumps, "no bid" responses on special orders calling for compliance with rigorous material certification and quality assurance requirements, shortages of qualified craftsmen for special fabrication processes, etc. has required further major upward adjustments in scaling factors and unit costs for estimating and scheduling reprocessing facility projects. All of the alternative study cases are affected but it is noted that, depending on institutional arrangements and schedule relationships, there may be advantages to nuclear park construction from onsite fabrication shops, craftsman training programs, bulk material ordering, etc. for reprocessing plants as well as reactors.

4.5.1.4 METHOD OF EVALUATION. In the implementation of this task, review was made of prior parametric studies on fuel reprocessing plant facility requirements and costs and of available information on business and regulatory trends, commercial plant project experience, nuclear facility integration considerations, etc. Bases and assumptions deemed appropriate for this phase of the study were defined, and evaluation was made of facility investment and unit operating costs as a function of throughput for the range of capacities of interest, including allowances for anticipated regulatory, functional and operability requirements. The sensitivity of these general relationships

to the bases and assumptions used was then assessed and adjustments were made to reflect most recent information regarding regulatory actions and plans, independent business studies and analyses, etc. Specific plant concepts for the various study cases were then defined and input data developed for the overall evaluation of energy park feasibility and economic viability.

4.5.2 Bases and Assumptions--Fuel Reprocessing

4.5.2.1 GENERAL. In regard to capability, it is assumed that an individual reprocessing plant will be designed to accept a limited range of spent fuel types. Minor variations in fuel geometry, initial enrichment, materials and methods of construction can be accommodated without significant increase in facility investment or unit recovery costs, but it is not considered feasible to reprocess both low and high enrichment fuel in the same facility, for example. Fortunately for the industry, all projected LWR fuels are of sufficiently similar design to be accommodated in common facilities. Reprocessing mixed UO_2 - PuO_2 fuel of currently projected designs in a plant whose principal feed is straight UO_2 fuel would result in some process system imbalance but the penalty in attainable throughput and unit recovery costs would not be unreasonable if the requirement had been anticipated in the plant design. For this task, primary attention has been given to single-purpose LWR fuel reprocessing plants capable of accommodating MO_2 recycle as well as straight UO_2 fuel designs.

In regard to reprocessing capacity requirements, the reference 1300 MWe LWR plants as defined are indicated to discharge ~37 MTU/yr based on a plant utilization factor of 80%, a net thermal efficiency of ~ 31% and fuel exposures of 33,000 MWD/MTU at discharge. On the basis that goal exposures this high may not be achieved on the average, it is assumed that 40 MTU/yr of reprocessing plant capacity should be provided for each of the reference LWRs served in the various study cases (~ 31 MTU/yr/1000 MWe).

4.5.2.2 REGULATORY. Assumptions regarding regulatory requirements and constraints used in this task are summarized below.

Plant Safety. Currently published and proposed regulations and regulatory guides (as described in 4.5.1.3) provide appropriate bases for establishing operating and accident safety requirements for reprocessing plants in the time period of interest. Continuing refinements in design seismic response spectra, "bench-marked" nuclear criticality calculation methods, etc. are expected but it is assumed that no new requirements of major significance will be imposed.

Nuclear Material Safeguards and Physical Protection. Requirements will be per currently published and proposed regulations, to the extent defined, with the additional assumption that colocation of reprocessing plants and matching MO_2 fuel fabrication facilities will be encouraged if not required by future regulatory actions.

Waste Management. In regard to radioactive or contaminated wastes, it is assumed that evolving policies and regulations will result in the following requirements:

- Collection and Control: Release of liquid effluents or direct burial of solid effluents will not be permitted. All such wastes will have to be collected, segregated, treated and stored in a manner permitting retrieval and offsite transfer at decommissioning if not before, including contaminated scrapped equipment, tools, etc.

- High Level Waste Treatment: Only limited holdup as liquid will be permitted (e.g., 1-2 months instead of 5 years per present policy), following which it will have to be solidified (e.g., calcined and glassified) and packaged for storage until transfer offsite.

- Transuranium-contaminated Waste Treatment: Alpha limits will be such that all major low level waste streams including fuel cladding hulls, failed process equipment, etc. will require consolidation and packaging per regulations currently proposed (limited holdup prior to offsite shipment). Treatment of transuranic wastes from colocated MO_2 fuel factories will be permitted in reprocessing plant facilities.

- Low Level Non-Alpha Waste Treatment: Centralized energy park facilities for handling this category of wastes will be permitted. Packaging for offsite shipment will be necessary but treatment and consolidation steps generally will be based on operational considerations rather than specific regulatory requirements.

- Onsite Waste Storage: Centralized energy park facilities for interim storage of packaged wastes will be permitted. Those for high level wastes will be designated as authorized Retrievable Surface Storage Facilities (direct transfer therefrom to final disposal). Non-radioactive waste treatment and disposal will be in accordance with current industry requirements.

Environmental Protection. "As Low As Practicable" standards applicable to reprocessing plants (equivalent to 10CFR50 Appendix I for reactors) will be established which will require multiple treatment steps for process offgases including krypton and tritium removal, packaging and ultimate transfer to Federal custody for long term storage and disposal. Plant release and environmental monitoring requirements will be of presently specified scope but with improved sensitivity to meet tighter limits.

4.5.2.3 FUNCTIONAL REQUIREMENTS. Reprocessing functions are assumed to extend from spent fuel receiving to preparation of recovered products and packaged wastes for shipment. Spent fuel shipping casks and associated transport equipment and operations are discussed later under "Transportation" as are secondary (reusable) product and waste shipping containers, etc. Assumptions regarding process functions on which reprocessing plant concepts and costs have been based (see Figure 4-39) are as follows.

Fuel Receipt and Storage. For the dispersed site case, receiving facilities must be capable of handling rail casks up to the maximum size (~125 tons) and truck casks as well since not all reactor stations are capable of utilizing rail casks. To account for discontinuities in fuel availability and shipping schedules, facilities must be capable of handling arrivals at up to twice the average rate based on reprocessing plant capacity and cask pay loads. Standardized casks of near maximum capacity and more closely integrated fuel discharge and shipping schedules are assumed for the cases of reprocessing plants serving specific energy park reactors, but receiving facilities still should be capable of handling ~1.5 times the average arrival rate.

The receiving functions include cask washdown, flush and monitoring before unloading, as well as decontamination of emptied casks prior to return for reload. It is assumed that the dispersed site plant would receive both water-filled and dry-cavity casks and must have somewhat more extensive facilities for these operations than would an energy park plant where only onsite movement of one cask type would be required.

Cask service facilities (for remedial and preventive maintenance, periodic inspection and testing, etc.) are assumed to be required for all plants with only minor differences between dispersed site and energy park cases due to the types of casks that would be handled.

Removal of fuel bundles from the shipping casks and transfer of removed bundles to underwater storage while awaiting reprocessing are necessary functions in all cases. For the dispersed site case, it

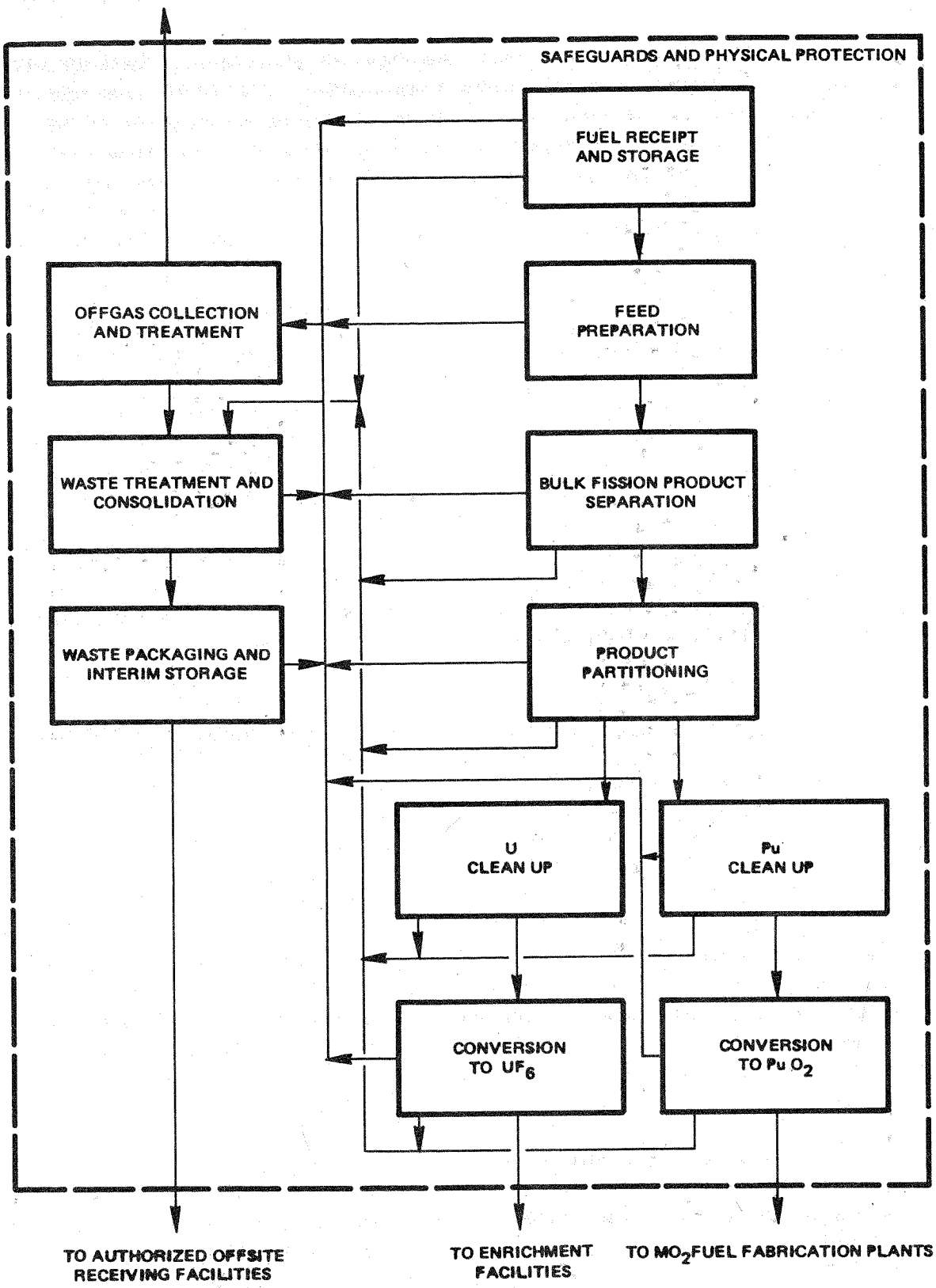

Figure 4-39 Reprocessing Plant Functions

is assumed that interim fuel storage capacity in excess of that required to assure continuity of reprocessing operations will be provided to accommodate the expected mismatch between available load and reprocessing capacity (equivalent to two to three years of plant operation). For the energy park cases it is assumed that interim fuel storage facilities will be available to handle spent fuel from initially installed reactors one half to one year after discharge (when short-lived radioactivity has decayed to facilitate loading and transfer) but that reprocessing systems will not be completed and put into operation until sufficient spent fuel has accumulated to support operation at design capacity (i.e., equilibrium output of all associated reactors) once the plant is started up. On this basis, maximum fuel storage at the reprocessing plant just prior to startup would exceed that required to assure operating continuity for a "dedicated" plant under equilibrium conditions (equivalent to one half to one year operation at design capacity). For these cases it is assumed that reactor pools would be utilized to the maximum extent practicable and that the remaining fuel can be accommodated in the reprocessing plant underwater storage facility for packaged high level waste which otherwise would not begin to be used until after fuel reprocessing operations had been initiated.

To minimize the physical size of fuel storage facilities and to facilitate subsequent feed preparation steps, it is assumed for all cases that the additional function of underwater fuel bundle disassembly and grouping of separated rods into more compact arrays for storage and transfer will be incorporated.

Feed Preparation. Functions assumed for gaining access to the fuel core material as required for subsequent chemical process operations are shearing the fuel rods into short lengths and leaching the core material out (e.g., with hot nitric acid). For all cases it is assumed that leaching systems will be designed for dissolution of mixed UO_2-PuO_2 core material. In this regard, it is further assumed that MO_2 fuel specifications will include provisions for assuring dissolvability of such mixtures (e.g., by limiting PuO_2 content and particle size and by establishing homogeneity or "solid solution" standards) without requiring use of more aggressive reagents or much longer leacher residence times for dissolution.

Other functions associated with shear/leach include: separation of the fuel cladding hulls from the dissolved fuel solution; rinsing and monitoring for completeness of dissolution; recycle for further leaching if required; and preparation for interim storage and ultimate disposal as transuranium-contaminated waste. For all cases it is assumed that the cladding hulls will be compacted prior to packaging to minimize unit costs for containers handling, transport and disposal.

Input accountability measurements and chemical adjustment of the fuel solution prior to further processing are included in the overall feed preparation function and are assumed to be per present practice for all cases.

Chemical Separations. Functions include: initial decontamination of the process stream; separation of the various products from each other (partitioning); purification and conversion of products to meet subsequent utilization requirements, and collection and routing to treatment of various process waste streams. Although there are other elements of potential commercial interest, it is assumed in all cases that only U and Pu will be recovered.

In regard to product purity and form, it is assumed that the bulk of the recovered U will be re-enriched for reuse in fuel fabrication. On this basis, conversion to the form of UF_6 meeting diffusion plant feed specifications is indicated. At present these include certain limits which are affected by reprocessing operations and others relating to isotopic content which reprocessing cannot affect. Of the former category, limits on alpha activity from transuranics are particularly significant. The present limit of 1500 disintegrations per minute per gram of U is scheduled to be reduced to 25 d/m/g in 1976 on the basis of alpha exposure control considerations under expected conditions with a significant fraction of the diffusion plant feed being recycled U. It is assumed for all cases that this limit will have to be met by specific reprocessing plant provisions for reduction of Pu and Np levels in the UF_6 product. It is assumed that other limits in the controllable category (e.g., volatile fluorides, hydrocarbons, nitrogen compounds and certain trace elements particularly troublesome to cascade operation) can be met without significant impact on reprocessing plant facility requirements and costs.

The most significant limit among those not affected by reprocessing operations per se is in regard to U-232/U-235 ratio. Because U-232 daughters interfere with detection of the 185 kev photon from U-235 which is used in the diffusion plants to monitor deposition of U-235 in the cascade, a limit of 110 parts U-232 per billion parts U-235 has been in effect. This is scheduled to be increased to 300 ppb U-235 in 1976 based on improvements in available monitoring equipment. The two main sources of U-232 in spent fuel are (1) irradiation of trace thorium in the fuel feed, and (2) decay of Pu-236 formed during irradiation. The levels of thorium found in virgin uranium are such that U-232 from this source can be kept to a small fraction of the future limit (10% or less) by feed material specifications which can be met without significant impact on the available U supply. Pu-236, on

the other hand, is formed primarily from U-235 and U-238 decay chains and thus cannot be controlled by feed specifications. The amount of Pu-236 present is a strong function of fuel exposure and the U-232 content from this source also depends on the decay time prior to reprocessing. For high exposure LWR fuel (30,000 MWD/MTU or more), U-232 from this source would build up from ~40 ppb after 4 years of decay and, for longer delays in reprocessing, would reach a peak of ~150 ppb which could result in the new limit being approached but probably not exceeded.

It is likely that uranium which has been recycled through LWRs a second time would have too high U-232/U-235 ratio for re-enrichment in a diffusion plant. Other U isotopes presenting potential operational and economic penalties in recycle are U-234 and U-236. Both complicate production of highly enriched U if substantial quantities of recycled feed are introduced into the cascades. In addition, U-236 is effectively a neutron poison in a thermal reactor so that higher initial enrichments (or shorter attainable exposures) are required to compensate for its presence. To date there has been no indication as to what restrictions or economic penalties may be established for reprocessing plant product containing these isotopes but calculations based on additional separative work requirements to provide equivalent reactivity indicate that U recovered from high exposure LWR fuel would have a value on the order of 60% that of virgin U at the same U-235 content. Multiple recycling would further reduce the value for thermal reactor fuel application.

On these bases it is assumed for this study that, regardless of decay time prior to reprocessing, UF_6 recovered from fuel which has had only one high exposure LWR irradiation period can meet future enrichment plant acceptability requirements but that detailed calculations of fuel cycle costs for specific study cases should account for the discounted value of first recycle material and essentially zero value of U which has undergone two or more cycles of irradiation.

In recognition of regulatory concerns regarding diversion potential of separated Pu in transit, it is assumed in all cases that reprocessing plants will be colocated with MO_2 fuel fabrication facilities capable of utilizing all of the Pu recovered. On this basis the form of the recovered Pu would be tailored to the head end requirements of the companion MO_2 fuel factory. A wide range of alternative interface arrangements is possible but for this study it is assumed that reprocessing plant functions will include conversion to ceramic grade PuO_2 power suitable for mechanical blending to produce MO_2 of appropriate homogeniety and limited maximum particle size. Also

in the interface area it is assumed that the reprocessing plant will provide certain Pu-bearing scrap recovery services for its companion MO_2 fuel factory. Because timely utilization of all recovered Pu cannot be assumed, provisions for product storage and safeguards, and for recycle to remove americium which builds up with extended storage, are included in the reprocessing plant considerations.

Waste Treatment and Packaging. Facilities and operations required to put all radioactive or contaminated wastes into forms meeting projected Federal agency acceptability criteria are included under reprocessing as are those for providing onsite protected storage while awaiting shipment. With virtually all process waste streams requiring consolidation, packaging, interim storage and ultimate offsite transfer, it is assumed that segregation and treatment will be based on minimizing the overall impact of waste control and disposal requirements on fuel cycle costs. Acceptance and disposal charges as well as shipping costs probably will be on a per-container or per-unit volume basis. For this reason waste compaction functions are included in the various reprocessing plant study cases.

In regard to interim waste storage, it is assumed that energy park facilities for protected storage of packaged high level waste will be designated as authorized Retrievable Surface Storage Facilities and will be sized accordingly. Also it is assumed that reprocessing plant facilities will be used to provide treatment and storage services for other than high level wastes from colocated facilities, as appropriate. The functions and assumptions regarding waste treatment, packaging and storage on which reprocessing plant facility requirements and costs have been based are summarized in Table 4-17.

Effluent Control. Functions assumed necessary to control effluent releases from reprocessing facilities to levels which are as low as practicable include:

- Process offgas collection and treatment (filters, scrubbers, chemical reactors, etc.) to remove gaseous constituents and airborne particulates of concern,

- Dilution of treated offgases with building ventilation air (systems designed to confine any leakage of gaseous or airborne constituents from the process),

- Filtration of the combined exhaust stream prior to elevated release from a plant stack, and

Table 4-17 Reprocessing Plant Waste Treatment Summary

Type and Source	Treatment	Volume	Pu	U	F.P.'s	Radioactivity	Initial Disposition	Final Disposal
High Level Waste • Aqueous waste stream from bulk fission product separation step • Other alpha-beta-gamma process wastes compatible with HLW treatment system.	Concentrated and calcined to dry F.P. oxide form (with diluent) and then fixed in glass matrix of low leachibility	~3 ft.^{3} of waste mix per MTHM processed	~20 gm per MT HM processed	<2 kg per MT HM processed	~30 kg per MT HM processed	~ 5×10^6 Ci (20 KW) per MTHM at minimum decay time for reprocessing (~160 days). Down to ~ 1/12 at 5 years.	Loaded into sealed canisters and stored underwater in onsite protected storage basin.	Transferred to Federal custody for extended retrievable storage and/or "permanent" disposal.
Cladding Wastes • Activated and contaminated fuel rod cladding segments and internal fittings.	Leached, rinsed and monitored; then roll-flattened to ~0.5 theoretical density	~3.5 ft.^{3} per MTHM processed	~3 gm per MT HM processed	~0.2 kg per MT HM processed	<10 gm per MT HM processed	~10^3 Ci F.P. and 3×10^4 Ci induced per MTHM at 160 days after discharge.	Loaded into sealed canisters and stored underwater in onsite storage basin.	Transferred to Federal custody for retrievable storage and ultimate disposal.
Alpha-Beta-Gamma Wastes • Various low level wastes not compatible with HL treatment • Scrapped process equipment which cannot be fully decontaminated.	Concentrated and converted to as-yet-unspecified form or reduced to pieces of manageable size if already solid	Up to 10 ft.^{3} per MTHM processed	-	-	-	By definition, ≥10 Ci/Kg of alpha activity and sufficient beta-gamma to require some shielding	Packaged in sealed containers for shielded onsite storage (probably in storage basin).	Transferred to Federal custody for retrievable storage and ultimate disposal.
Alpha-Only Wastes • Pu process wastes • Contaminated solid materials (paper, rags, plastic, glass, etc.)	Combustibles incinerated; all consolidated as necessary for Federal acceptance	~1 ft.^{3} per MTHM processed	-	-	-	By definition, ≥10 Ci/Kg of alpha activity, and insignificant beta-gamma	Packaged in sealed drums for on-site storage	Transferred to Federal custody for retrievable storage and ultimate disposal.
Alpha-Free Wastes • Separable fuel bundle components not in contact with core material • Other very low level wastes	Nominal compaction	~150 ft.^{3} per MTHM processed	-	-	-	Not specifically projected	Packaged in sealed containers for onsite storage as appropriate	Transferred to authorized disposal facilities.
Other Wastes • Process vent gases containing gaseous and airborne radioactive constituents (~2000 cfm) • Main Process Building ventilation exhaust stream (~100,000 cfm)	Voloxidation to remove H-3; scrubbed to remove halogens, etc.; cryogenic distillation to remove noble gases; and filtered to remove particulates.	~0.1 ft.^{3} H-3; <0.01 ft.^{3} I; <0.1 ft.^{3} Kr-85 per MTHM processed	-	-	<0.1 gm H-3, ~0.3 Kg I, ~6 Kg noble gases per MTHM	~600 Ci/MTHM H-3; <0.1 Ci/MTHM I-129 and ~10^4 Ci/MTHM Kr-85 at 160 days after discharge.	Packaged in sealed containers for on-site storage as appropriate	Transferred to Federal custody for extended storage or disposal.

- Monitoring of the undiluted offgases and the combined exhaust stream, before and after treatment, and of the environs as well (shared with colocated facilities, as appropriate).

Other effluent control functions accounted for in the reference plant concepts include strict separation of non-process effluent streams from those having contamination potential, collection and treatment or return to process of any liquids or solids leaking from radioactive process or storage facilities, etc.

4.5.2.4 PROCESS AND PLANT DESIGN CONSIDERATIONS.

Bases of Designs. Chemical and mechanical operations employed in fuel reprocessing are relatively conventional (solvent extraction, ion exchange, concentration, distillation, chemi-sorption, calcination, etc.) but specific process and plant design requirements are unique because of the high radiation fields present and the need for tight confinement and control of radioactive and fissionable materials in process systems. Provisions for meeting such requirements have been worked out for large scale production of weapons-grade Pu, but these are not applicable in all cases to the design of commercial facilities for reprocessing power reactor fuels. Information available from weapons production and supporting development programs and from related industry experience in non-radioactive process operations as well has been applied to the three U.S. commercial LWR fuel reprocessing plant projects and to various overseas installations. In addition, quite a number of process and plant design studies have been made on plants for reprocessing power reactor fuels under a range of assumptions in regard to siting, capacity, product forms, regulatory requirements, etc. General conclusions from review of published information are that:

(1) Process operations have been demonstrated for accomplishing each of the fuel reprocessing plant functional requirements discussed above, at least for the LWR fuel case;

(2) A range of system and equipment concepts for implementing the various process operations under commercial plant conditions has been developed but has not been fully demonstrated on high exposure fuel at target throughput rates;

(3) There are differences among the process flowsheets and system designs that have been selected (or proposed) but, for a given set of functions and constraints, they appear to have limited impact on overall facility requirements and costs; and

(4) There do not appear to be any technical or engineering breakthroughs in the offing which would have significant effect on the magnitude of unit facility investment requirements and operating costs for providing commercial fuel reprocessing services in the time period of interest.

On these bases it is assumed that selection of a reference flowsheet utilizing relatively well demonstrated process operations, as illustrated in Figure 4-40, is appropriate for use in developing input data for evaluating LWR energy park feasibility and viability. Such a flow sheet would be applicable, although perhaps not optimum, over the capacity range of potential interest (160 MTU/yr for the smaller self-contained park to as much as 4000 MTU/yr for a large Pu burning park receiving spent fuel from other UO_2 fuel only parks). There will not have been a great deal of actual production scale commercial reprocessing plant experience available at the time that design of such plants would have to be established. Therefore, even though the various process steps have been demonstrated, program activities must include system engineering support and test work more nearly typical of a first-of-a-kind plant than of "standardized" reprocessing plants. Some of the more significant technical and engineering bases for the selected process and plant designs are discussed below.

Fuel Receipt and Storage. Design principles and practices for underwater handling and storage of irradiated fuel bundles are well developed. Underwater bundle disassembly to permit rod storage in higher density configurations has not been employed previously but LWR bundles have been disassembled in reactor storage pools in order to replace individual rods that have failed prematurely so that bundle irradiation could proceed to goal exposure. Equipment and procedures developed for such operations are applicable to the assumed reprocessing plant function. Bases also are available for design of containers, racks, etc. to permit safe storage and handling in compact arrays.

Feed Preparation. For sintered oxide fuel clad in stainless steel or zirconium, the chop/leach process for separating the fuel material from its cladding has been demonstrated to be most effective and is used in present and proposed commercial LWR fuel reprocessing plant designs. A number of fuel shear and leacher concepts of demonstrated functional capability, including provisions for offgas collection and routing to treatment, are available as bases for future plant systems design. Incorporation of tritium removal from the sheared rod segments prior to leaching is new, however. The method considered is the "voloxidation" process which, as presently

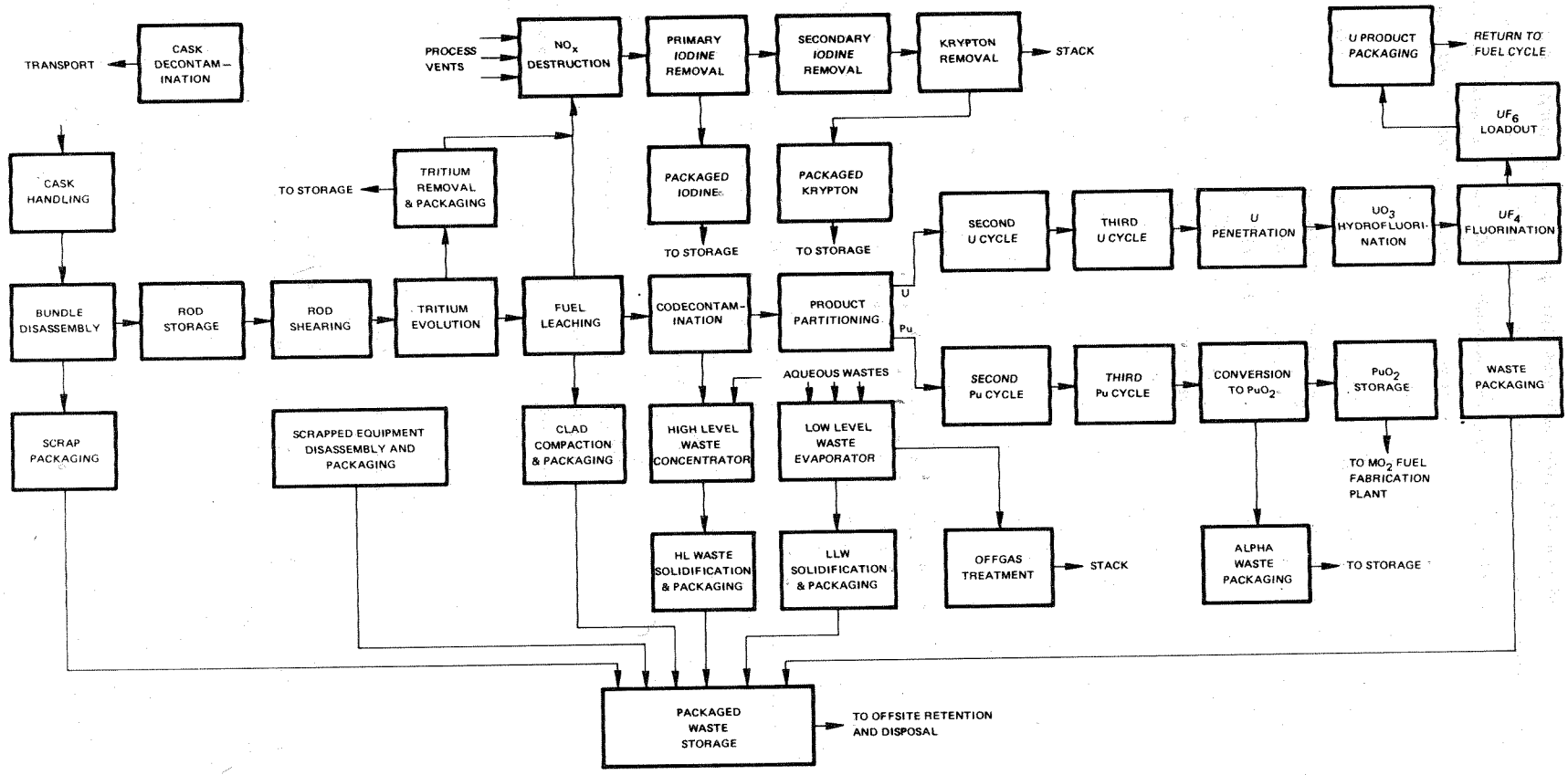

Figure 4-40 Reference Reprocessing Plant Flowsheet

conceived, employs a rotary calciner to heat and tumble the fuel segments to drive off contained tritium. Calciner offgas consisting of tritiated water vapor and other gaseous constituents in air is routed through a dessicant to collect the tritium for packaged storage and disposal. This method has been demonstrated on an engineering test scale but no truly production units have been built and operated. The requirements for sealed rotating equipment at high temperature, handling irregular dry solids in a remote hot cell, are near pessimum as far as designing for reliable operation is concerned but it is assumed for this study that system designs suitable for production application will be available for installation in time to meet projected construction schedules.

Chemical Separations. Candidate processes for separating U and Pu from fission products and from each other range from the all-aqueous unit operations (solvent extraction, ion exchange) used in weapons production fuel reprocessing to dry operations such as are used in uranium feed preparation and have been considered for advanced power reactor fuel reprocessing (e.g., fluoride volatility work at Argonne and ORNL).

The aqueous processes generate substantial volumes of liquid wastes which in future commercial plants will require concentration and conversion to solid form but they have the overwhelming advantage of extensive development and demonstrated effectiveness. Such processes are used in the NFS and AGNS plants (Figure 4-37) as well as overseas (e.g., Windscale, Marcoule, LeHague) so that some experience in high exposure power reactor fuel reprocessing by these operations will be available from such plants.

Additional system engineering development and testing will be required in support of future plant process and facility design but there are sound bases for assuming that functional performance requirements and operability objectives for the various energy park study cases can be met as indicated. In regard to the waste stream from the initial cycle of solvent extraction which contains the bulk of the fission product activity, processes and equipment for concentration and conversion to dry fission product oxide form have been developed and demonstrated on an engineering test scale (e.g., GE's commercial plant program, Table 4-15). It is possible that the granular calcine so produced will be considered an acceptable intermediate waste form, but it is assumed that glassification will ultimately be required, and that technical and engineering bases will be available for production scale process and system designs as the result of intensive efforts programmed in this area over the next few years. Bases also are

available for design of necessary systems for solvent treatment and spent solvent disposal, process water and acid recovery, etc. associated with solvent extraction operations.

In regard to product stream purification, successive cycles of solvent extraction are extensively developed and widely used (NFS, AGNS, etc.). For U purification, the processes for conversion to UF_6 form for final decontamination of the U stream (calcination, fluorination, sorption and distillation) also have been developed (GE plant program), but applicability to production-scale power reactor fuel reprocessing has not been fully demonstrated. The reference flow sheet includes U stream conversion based on U feed preparation technology as an integral step in the process, but assumes prior decontamination sufficient to permit contact maintenance of the anhydrous process systems. Some experience with recovered U conversion operations, including compliance with the tighter enrichment plant feed specifications will be available in support of future plant designs (e.g., from the AGNS plant).

Processes and equipment for converting purified Pu nitrate solutions to forms required for shipping and utilization have been demonstrated although principally with Pu recovered from lower exposure fuel which is of relatively low radioactivity levels. The available process technology is directly applicable to commercial facility operations but process confinement and personnel protection requirements will necessitate development and demonstration of new system configurations and design details. Bases for design of other systems associated with product loadout and utilization such as storage, americium removal and Pu scrap recovery also are available but with the same requirements for development of specific designs.

Waste Treatment. Technical and engineering bases are available for design of necessary waste concentrator and evaporator systems including provisions for recovery of process water and acid for recycle. Containers and protected storage facilities also can be designed to specified requirements on the basis of existing information. However, such factors as waste form acceptability criteria, container size constraints and integrity standards, etc. have not been defined yet for any of the reprocessing plant waste categories.

The timing of Federal agency (now ERDA) programs is such that criteria and standards should be available when study case facility designs would have to be established but not early enough to permit much actual plant project and operating experience to be accumulated. Full demonstration of high level waste glassification, for example, will require extensive testing with full level wastes from power

reactor fuel reprocessing which probably will not be available in quantity before 1978.

However, the scope of waste treatment provisions included in the reference flow sheet and the general cost allowances made for design development and implementation are sufficiently conservative that possible variations in ultimate requirements will not have significant impact on overall study conclusions.

Other Process and Plant Design Considerations. For offgas treatment, demonstrated technologies for removal of radioiodines, particulates, oxides of nitrogen, etc. are available. However, under the "as low as practicable" approach, application of as yet undemonstrated processes and systems of improved performance will be required for future plants (e.g., Iodex process). General provisions are included in the various study cases for such advanced treatment.

For krypton removal the reference method is cryogenic distillation for which there is relatively well developed process technology. Systems have not been built and operated on actual reprocessing plant offgases but there are sound bases for assuming that demonstrated designs (e.g., in recent LWR power plants) will be available for application in the time period of interest.

A particular area for which commercial designs of requisite capability have not been fully demonstrated is that of servicability of radioactive systems requiring remote operation and maintenance. Potential approaches range from providing flexibility for remote replacement of all major items of radioactive process equipment within shielded cells, as in AEC separations plants, to designing for extended service life without requiring replacement as in the Windscale facilities. For commercial plants, the cost of complete replacement capability and of necessary on-hand spares to minimize downtime is a serious consideration. On the other hand, it is difficult and expensive to assure extended process system operability (in contrast to safety for which shutdown is an accepted assurance mode) under commercial procurement and fabrication practices. Varying combinations of these two basic approaches have been taken in commercial plant designs to date, generally with the objective of providing capability for replacement of equipment subject to unusually severe service conditions or to early obsolescence (due to process improvements, changes in functional requirements, etc.) but "building in place" those components for which adequate design margins in regard to performance and life can be incorporated.

Sustained operating experience with commercial facilities will be necessary to provide firm bases for projecting remote system operating efficiencies and the effect of specific design features thereon. Fairly arbitrary assumptions were made in this study regarding process equipment replaceability, installed and on-hand spares, contaminated equipment repair, failed equipment disposal provisions, and attainable operating efficiencies (ratio of instantaneous rate to annual throughput).

4.5.3 Reference Concepts--Fuel Reprocessing.

4.5.3.1 GENERAL DESCRIPTION. Layout of LWR fuel reprocessing plant facilities is generally similar for all of the study cases considered. A typical arrangement for a 1500 MTU/yr plant (reference dispersed site case) is shown in Figure 4-41. Key elements affected by dispersed versus park location and/or by plant capacity can be described as follows:

Acreage Requirements. Major factors affecting the size of reprocessing plant sites are (1) the minimum distance to which uncontrolled public access is permitted ($\sim$1/2 mile from process facilities or plant stack, per Regulatory Guides) and (2) exclusion area requirements based on safeguards and physical protection considerations. Acreage requirements dictated by the former can be shared with other industrial plants if absence of deleterious interactions under operating and emergency conditions can be assured. Thus, acreage requirements for colocated nuclear facilities can be substantially less than the total required for such facilities located independently.

A fenced and instrumented security area for reprocessing and MO_2 fuel fabrication plants is required for the energy park as well as dispersed site cases due to fissile material safeguards requirements. The area actually occupied by reprocessing plant facilities located within the security fence (cask receiving area, main process building complex, utility and service structures) varies with capacity but dispersed versus park siting has only minor effect. Non-process facilities located outside the security fence (principally non-radioactive waste disposal facilities such as sanitary lagoons and evaporation ponds) require significant area for an independent reprocessing plant but not for the park cases where it is assumed that common site facilities could be provided.

Main Process Building. All equipment and systems for handling radioactive process materials are housed in a Main Process Building (MPB) complex. Principal elements of this structure include:

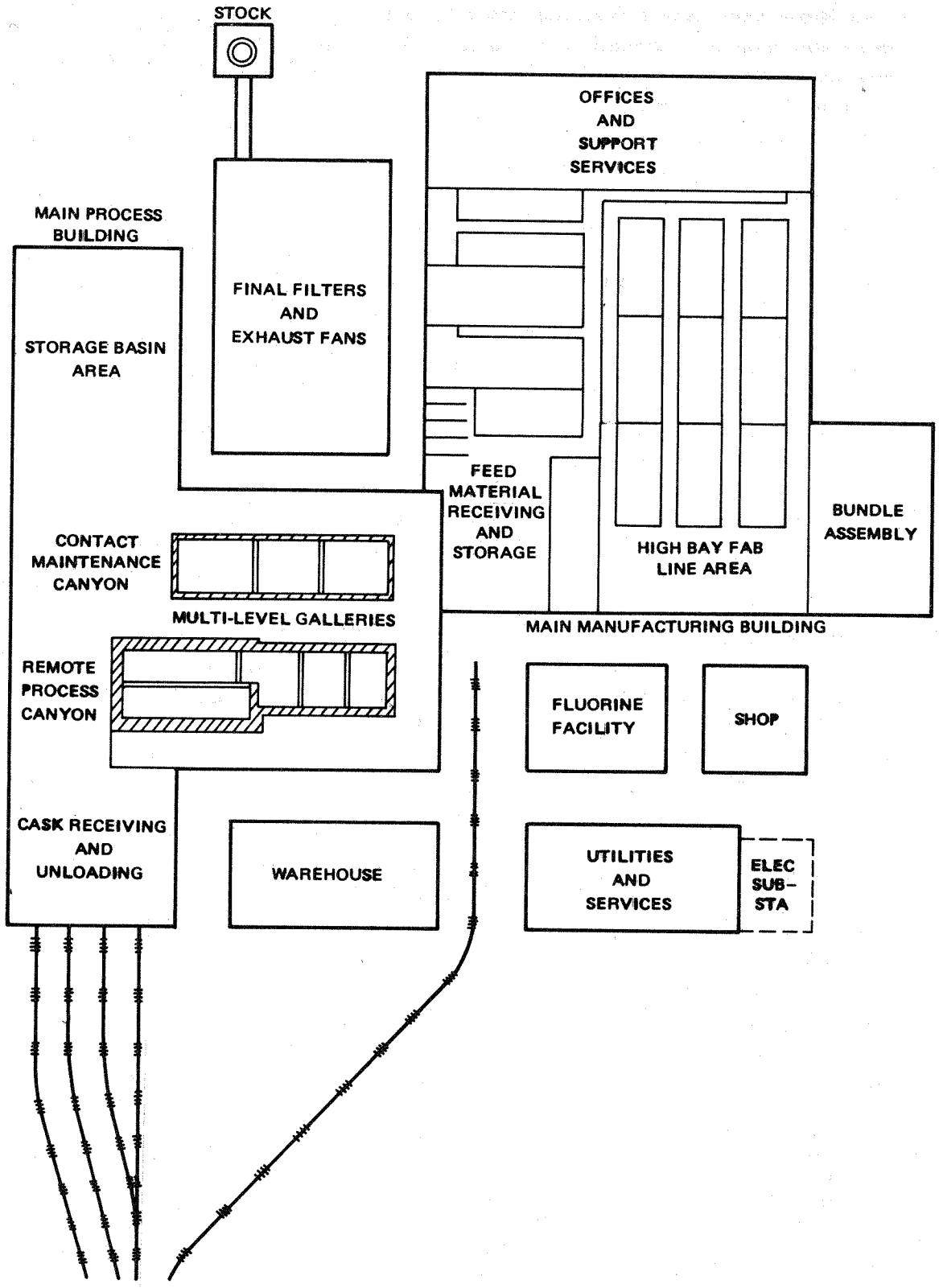

Figure 4-41 Typical Reprocessing/Fabrication Plant Layout

- Cask Receiving Area: Inside the security fence, site rail spurs and roadways lead to a controlled personnel access area provided with cask transfer crane facilities the travel of which extends into the MPB structure to service a cask decontamination area and unloading pool(s). Parallel facilities are provided as required to process incoming casks at necessary rates. Requirements for handling multiple cask types, etc. in the dispersed site case affect layout and costs to some degree.

- Fuel Storage Basin: Adjacent to the cask receiving area is a water-filled storage basin which, like the unloading pool, is a below-grade structure of steel-lined concrete designed to resist seismic forces. It is provided with fuel handling crane facilities, liner leak detection and control provisions, and a water recirculation system equipped for heat rejection and contamination removal. It also contains underwater fuel disassembly stations to permit fuel rod storage in compact arrays. Storage area requirements and the number of disassembly stations vary with plant capacity and between dispersed and park siting.

- Remote Process Canyon Area: A massive reinforced concrete "canyon" area provides shielding, confinement and mechanical support for all highly radioactive material processing equipment and systems. It is provided with a remotely operated overhead crane for removal and replacement of equipment. The lower portion of the canyon is partitioned into individual cells for segregation of process operations, as appropriate for interaction control. Each cell is lined and provided with sumps and ventilation covers as secondary confinement barriers. Process equipment which may require removal and replacement for maintenance or improvement is assembled in structural "packages" which are located adjacent to wall plugs through which connections to non-radioactive service systems are made. In-cell connections are made by remotely installable jumpers. "Permanent" vessels and equipment are located below the removable assemblies, near the bottom of the cells. Cell area requirements do not vary much with capacity up to size limits based on nuclear criticality or operability considerations. Beyond such limits, parallel components are required so that cell area may have to be multiplied, or if piping or criticality configurations would be too complex, parallel shielded cells may be required. Park versus dispersed siting has no effect on canyon structure and equipment requirements.

- Contact Maintained Process Areas: Final product cleanup conversion and loadout systems are located in a less heavily shielded confinement structure with access for contact maintenance and replacement of component equipment. Area requirements vary as for the remote systems but with less effect on complexity and cost.

- Operating Areas: The process areas are surrounded by multilevel galleries which house operating control points as well as various process support facilities. Provisions are necessary for assuring radioactive material control and safe shutdown capability. Resistance to seismic and tornado forces is required for safety-related functions.

- Waste Storage Areas: A water-filled basin for protected retrievable storage of all consolidated and packaged radioactive wastes is provided. Waste basin area requirements vary with capacity and also are affected by the assumptions made regarding waste management services for the energy park cases.

Ventilation Filter Building. Adjacent to the MPB and connected to it by an air tunnel is a reinforced concrete structure containing a large capacity high efficiency filter, ventilation exhaust fans, switchgear for normal and emergency power supplies, gas monitoring systems, etc. A discharge stack, connected to the exhaust fans by a horizontal duct, is located nearby. Capacity requirements for these facilities vary with plant size but are not affected significantly by dispersed versus park siting.

Utility and Service Buildings. Facilities for providing necessary process chemicals, service steam, electric power, etc. are housed in structures separate from the MPB for all study cases. Personnel access control, physical protection facilities and offices for reprocessing plant administrative staff also are provided. Integration of such requirements with overall site provisions for the energy park cases would not have significant impact on layouts or costs. Availability of a process water supply system is necessary.

4.5.3.2 SPECIFIC CONCEPTS.

Dispersed Plant Case. Plant data for the comparative non-park case are summarized in Table 4-18. The capacity selected (1500 MTU/yr) is consistent with the bases and assumptions indicated previously. Larger plants could be built in time but factors tending to limit the size of individual dispersed site units (magnitude of business risk unless

Table 4-18 Reference Case Reprocessing Plant Data

	DISPERSED SITING CASE (PARA. 4.5.3.2)	5200 MWe ENERGY PARK N4PC	26000 MWe ENERGY PARK N6PD	5200 MWe Pu B PARK N4PD	26000 MWe Pu B Park N20PD	Pu B PARK WITH EXCESS CAPACITY N20PD
NOMINAL ANNUAL CAPACITY	1500 MTHM	160 MTHM	800 MTHM	500 MTHM	2450 MTHM	4000 MTHM
ANNUAL INPUT						
UO_2 FUEL	1050 MTHM	102 MTHM	510 MTHM	338 MTHM	1694 MTHM	2912 MTHM
MO_2 FUEL	450 MTHM	44 MTHM	218 MTHM	146 MTHM	728 MTHM	728 MTHM
TOTAL INPUT	1500 MTHM	146 MTHM	728 MTHM	484 MTHM	2422 MTHM	3640 MTHM
ANNUAL OUTPUT						
UF_6 PRODUCT	~1400 MTU	~ 136 MTU	~ 680 MTU	~ 450 MTU	~ 2260 MTU	~ 3400 MTU
Pu O_2 PRODUCT	~ 26 MT Pu	2.5 MT Pu	~ 12.6 MT Pu	8.3 MT Pu	~ 46.7 MT Pu	~ 52 MT Pu
STORAGE CAPACITY						
SPENT FUEL	3000 MTHM	160 MTHM	800 MTHM	500 MTHM	2500 MTHM	4000 MTHM
HIGH LEVEL WASTES*	7500 MTHM	800 MTHM	4000 MTHM	2500 MTHM	12000 MTHM	20000 MTHM
OTHER WASTES (AVE.)*	5000 MTHM	500 MTHM	2500 MTHM	1500 MTHM	7500 MTHM	12000 MTHM

* EQUIVALENT THROUGHPUT BASIS

near-full utilization is assured, fuel shipping logistics and costs, etc.) are felt likely to outweigh potential economies of scale. At projected LWR power station thermal efficiencies, operating schedules and goal exposures, a 1500 MTU/yr plant could reprocess the spent fuel from 35,000 to 55,000 MWe installed LWR capacity, depending on fuel exposures attained.

5200 MWe Energy Park Case. A reprocessing plant sized to match the spent fuel output from only four LWRs of the reference 1300 MWe capacity probably is too small to be considered economically viable but data are listed in Table 4-18 for comparative purposes. More likely alternatives are that spent fuel from such small size parks would be shipped to (1) dispersed site reprocessing facilities, (2) an integrated park having reprocessing and recycle fuel fabrication facilities of more economic size and reactor plants capable of burning all of the Pu recovered, or (3) an authorized repository for disposal unreprocessed.

26000 MWe Energy Park Case. A reprocessing plant to match a 20 reactor complex would be of feasible size (Table 4-18). Based on the assumption that the reactors would be built in sequence and would come on line at yearly intervals, the reprocessing plant would have to start up 10 to 11 years after completion of the first park reactor (allowing for less than full reprocessing rate during the first 1-3 years of operation) in order for equilibrium to be reached with a stored fuel inventory equivalent to $\lesssim$0.5 throughput. Fuel storage capability would have to be available 3 to 4 years after completion of the first reactor to accommodate fuel available early. Completion and checkout of mechanical and chemical process systems with fuel storage facilities already in operation (including temporary use of waste basins to meet the early storage peak) should be feasible.

26000 MWe Pu-Burner Park Case. A reprocessing plant sized to recover the amount of Pu required to fuel 20 reactors loaded with the maximum amount of MO_2 fuel would be near optimum capacity (Table 4-18). Because PuB reactors probably would not be able to operate efficiently on UO_2-only fuel, the reprocessing (and MO_2 fabrication) plant would be scheduled for startup one to two years prior to the time that the initial fuel load would be required for the first onsite (PuB) reactor. Early fuel storage capability would be required as for the other park cases.

26000 MWe Pu-Burner Park Case With Excess Pu Recovery Capability. A plant capable of reprocessing spent fuel from multiple park reactors totalling 104,000 MWe installed capacity of which 26000 MWe is in colocated Pu burner reactors may approach or exceed the

limits of practicability. For example, the space required to provide access in the MPB for the necessary number of parallel cask receiving lines becomes difficult to accommodate in an operable facility layout. Also, there are factors which indicate that plant operating efficiencies would be lower for such large sizes. However, data on this case are included in Table 4-18 for comparative purposes.

The most likely use for the excess Pu produced in this case would be to provide initial fuel inventories for breeder reactors coming on line. In accordance with assumed regulatory constraints regarding bulk shipment of separated Pu noted previously, the reprocessing plant concept for this case includes storage of recovered Pu in excess of onsite Pu burner requirements for ultimate utilization in breeder reactor fuel. (For criticality control, the breeder fuel would likely be processed in separate equipment because of higher enrichments than LWR fuel.)

4.5.3.3 CONCEPTS FOR REPROCESSING OTHER THAN LWR FUELS. Only general consideration has been given to functional requirements and plant concepts for reprocessing fuels from alternative reactor types such as the HTGR and the LMFBR. Technical and engineering information on which to base projections is less extensive than for LWR fuel reprocessing plants and there are no directly applicable plant project data. Published forecasts of HTGR additions [2] have indicated sufficient installed capacity to support a reprocessing plant of reasonable size by about 1986. A first demonstration reprocessing plant probably could be built by that time if supported by a well-funded process and plant design development program. Rough comparisons of functional requirements and constraints indicate that the scope of follow-on (second generation) facilities and associated costs will be substantially higher than those for LWR fuel reprocessing plants on a unit throughput (per metric ton reprocessed) basis but less fuel is reprocessed for a given amount of electric power production so that the contribution to total cost of generation should be generally comparable.

LMFBR projections [2] indicate power station installations starting prior to 1990 with a subsequent growth rate such as to require immediate recovery of Pu from early fuel discharges as well as supplemental Pu from LWR fuel reprocessing to provide initial fuel inventories for reactor additions. As noted previously, reprocessing of LMFBR fuels in a plant designed for LWR fuels is not economically feasible on a production basis. While both types may be reprocessed alternately or concurrently in the same facilities, nuclear criticality control requirements would result in throughput restrictions for the LMFBR fuels. Also, the relative times taken for fuel exposure and for reprocessing, refabrication and shipping affect doubling time which is an important

parameter for breeder reactors as discussed in 4.3.3. Thus, the extended cooling times prior to shipping and reprocessing on which LWR facility designs normally are based may not be acceptable for LMFBR fuels. Alternatively, if dual-purpose facilities are designed to permit prompt reprocessing and refabrication, the additional costs involved could make LWR fuel recovery and recovered product utilization uneconomic in such facilities.

A typical isotopic composition for fuel discharged from an LMFBR is given below as input to consideration of dedicated fuel recovery and recycle fuel fabrication plants:

	Percent by Weight				
	Plutonium 239 & 241	Plutonium 240 & 242	Uranium 235	Uranium 238	Fission Products
Core	11.5	6.4	0.1	72.0	10.0
Axial Blanket	3.5	0.2	0.2	95.3	0.8
Radial blanket	2.0	-	0.2	97.5	0.3
Aver. both blankets	2.8	0.1	0.2	96.2	0.6
Aver. whole reactor	5.8	2.0	0.2	88.0	4.0

It should be noted that the requirement for rapid return of recoverable Pu to the LMFBR fuel cycle presents substantially more difficult technical and engineering problems. The program presently envisioned for development and demonstration of necessary process and plant design technologies appears to have little chance of providing adequate bases for commercial facility installations in this time frame. Overall, it is felt that LMFBR energy parks are not likely to be feasible until after the year 2000. Because common reprocessing facilities cannot be used, application of LMFBRs as late additions to LWR energy parks would not be feasible either until necessary process and plant design concepts have been developed and demonstrated. Rough comparison of functional requirements and constraints would indicate that, for comparable heavy element (U plus Pu) throughput rates and consistent assumptions in regard to necessary safety, safeguards, environmental protection and waste management provisions, the unit facility investment and reprocessing service costs will be a factor of two or more greater for LMFBR fuels than for the LWR cases studied.

4.5.4 Costs and Schedules--Fuel Reprocessing.

4.5.4.1 GENERAL RELATIONSHIPS.

Evaluation Procedures. To develop cost and schedule characterizations for the different study case reprocessing plants, a comprehen-

sive listing was prepared of project and support activities necessary to implement the reference facility concept. Each of the ~100 activities so listed was examined for effect of variations in plant capacity, location, etc. Initial evaluation was based on applicable prior experience, available for >80% of the items listed. Results were then checked against the latest information from actual reprocessing plant projects.

Cost Relationships. Plant costs as a function of capacity are shown in Figure 4-42. Principal conclusions are that:

- For any capacity, plant costs in the time period of interest will be substantially higher than has been projected in previously published studies. Facilities capable of reprocessing 1500 MTU/yr of commercial LWR fuel, for example, are indicated to have investment requirements on the order of $350 million, not including shipping casks, compared to projections of about $55 million published in 1971. Total project costs are indicated to be about $300,000 per MTU/yr of design throughput capability in this size range. These differences appear to result principally from added functions and features necessary to meet changing regulatory requirements and from unanticipated trends in implementation costs for major facility design and construction projects.

- The variation in plant costs with capacity projected in this evaluation is significantly different than indicated in previously published reports. Exponential scaling factors of 0.35 or lower have been considered as applicable over a wide range of plant sizes. Use of individual scaling factors for each activity item in this evaluation results in a more complex relationship of cost and capacity. Plants at the low end of the range are indicated to be relatively expensive because a significant portion of the project cost items do not vary much with plant size. Increasing capacity up to mid-range does reduce unit investment requirements at a substantial rate. At the upper end of the range where the relatively fixed costs are less significant and further increases in capacity must be obtained by paralleling components, the variation in cost with plant size approaches an exponential scaling factor of 0.7.

- There do not appear to be any particular technical or engineering limits to plant size but there are economic and practicability factors to be considered. Unit costs for the smallest plant called for among the study cases are more than twice those for more nearly optimum size plants. Their contributions to overall

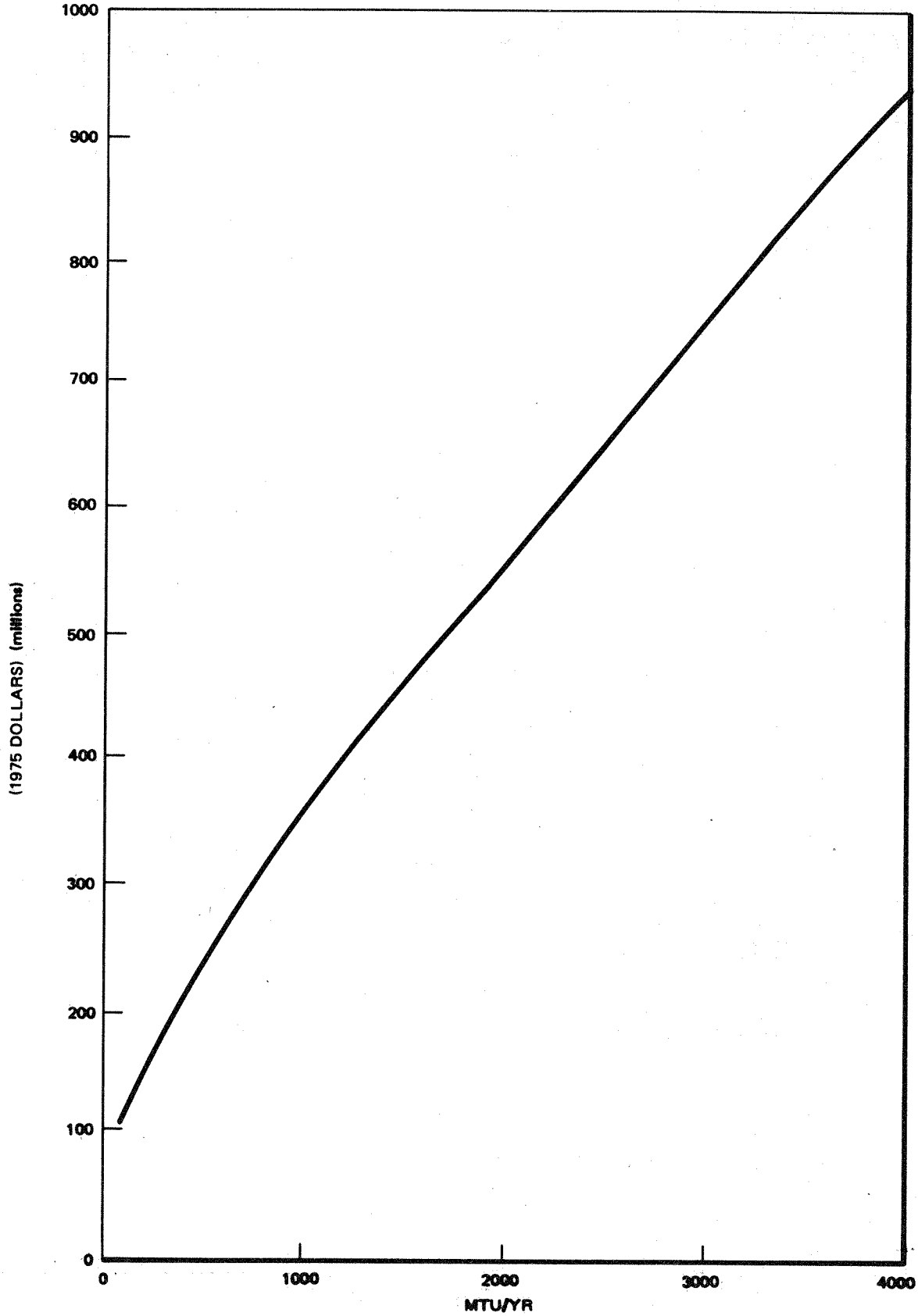

Figure 4-42 Reprocessing Plant Cost vs Capacity (LWR Fuel)

power generation costs still are relatively small but are such that alternative methods of fuel disposition may be preferable. At the upper end of the size range it is noted that operating efficiency will be affected by finite batch sizes, inventory requirements for fissile material accountability and other factors. Plants of up to 4000 MTU/yr capacity could be built and operated but the optimum size for a single plant may be less than 4000 MTU/yr.

- Unit reprocessing service costs are difficult to compare on a consistent basis because of the effect of assumptions made in regard to plant depreciation, return on investment, etc. which vary with institutional and financing arrangements for specific cases. For example, if an investment of $500 million was made in a 1500 MTU/yr plant as a separate business venture (e.g., 15% discounted rate of return on investment after taxes, not untypical of a high risk activity) unit recovery costs would be about $160/kg U, not including charges for fuel and waste transportation, final waste disposal, etc. The same plant built as a dedicated service facility for a nuclear power generation complex, under common ownership and "patient capital" financing, could have unit reprocessing costs in the range of $60 to $90/kg U. In regard to variation with annual throughput, unit operating costs as a function of capacity for fully loaded plants of the reference concept are shown in Figure 4-43. These include appropriate allowances for labor, materials, taxes, insurance, licenses, utilities and equipment replacements as well as for accumulation of funds to cover ultimate decommissioning in accordance with regulatory requirements.

- Costs associated with spent fuel storage while awaiting reprocessing generally are included under reactor and reprocessing plant operations. More extended storage (deferred reprocessing or throw away) is of interest in this study. Such storage could be in separate facilities built specifically for the purpose or in reprocessing plant storage basins put into operation before startup of the remainder of the plant. Investment requirements are indicated to be on the order of $10,000/MTU of design capacity for a large independent installation meeting currently projected regulations and guidelines in regard to safety, physical protection, etc. As a separate business, typical allowances for return on investment and for less than full utilization of capacity would result in storage costs of about $8000/MTU per year, not including transportation. For early storage service at a reprocessing plant, unit costs will be

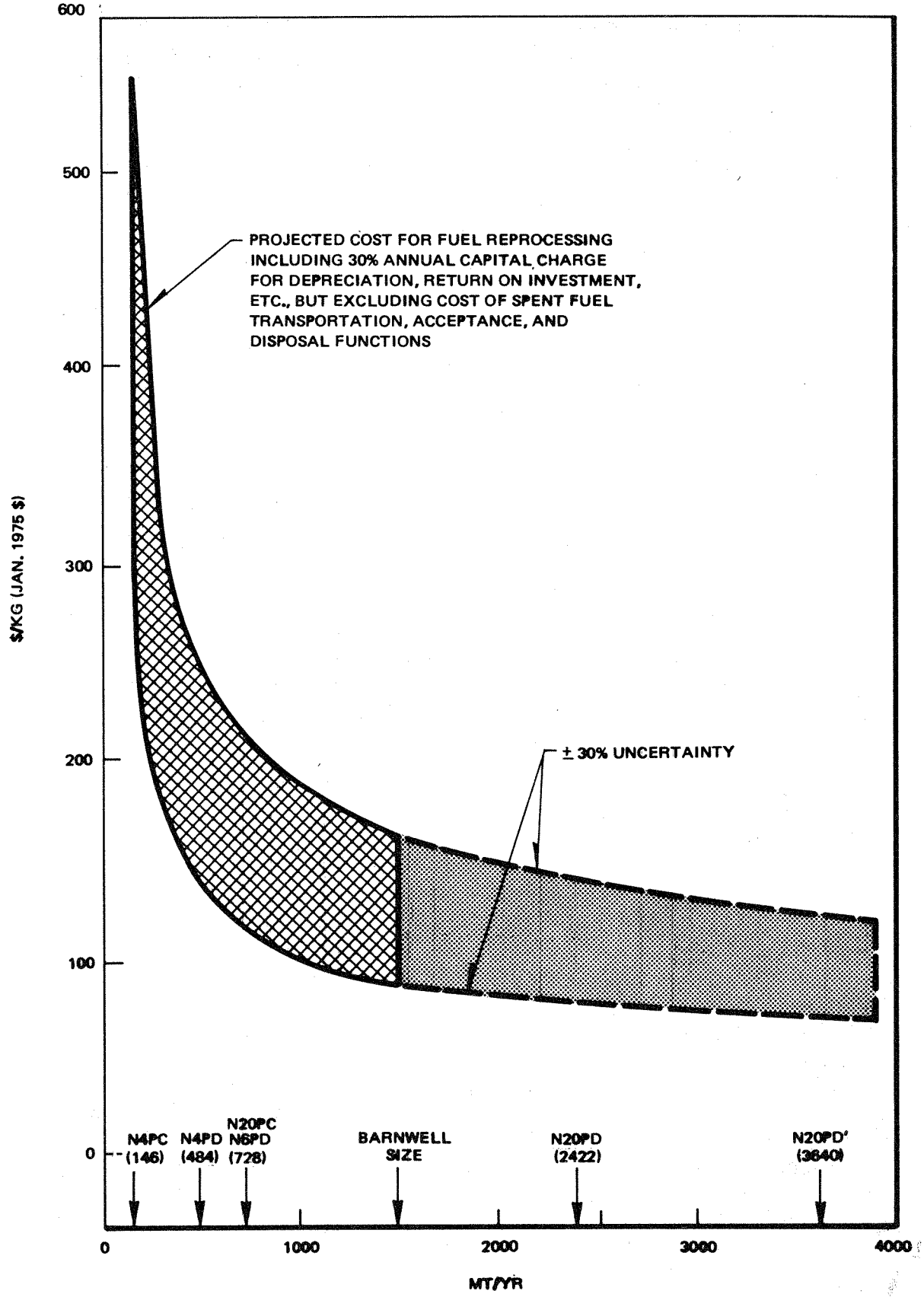

Figure 4-43 Unit Reprocessing Cost vs Capacity (LWR Fuel)

strongly affected by how allowances are made to cover depreciation and return on investment for the structures and support systems that would have to be completed to permit such operations ahead of normal plant startup. Unit storage costs excluding depreciation and return on investment would range from $4000 to $6000/MTU per year, depending on the amount of fuel stored. The cost of permanent disposal of spent fuel unreprocessed, based on bundle disassembly and containerizing of rods in compact arrays (after necessary storage time to permit the rate of heat generation to decay) for transfer to a Federal repository, would appear to be on the order of $85,000/MTU.

Schedule Considerations. Duration and sequencing requirements for the various activities involved in reprocessing plant design, construction and licensing were specifically evaluated using the latest information available. As summarized in Figure 4-44, results indicate that the minimum time required from initiation of formal design to plant "hot" startup is from 7 to 9 years.

The major factor contributing to schedule length is the time required for acquisition of a construction permit. Present standards of acceptability for construction permit applications require that safety analyses and environmental impact evaluations be based on firm design data in regard to plant structures and systems having related functions. The trend appears to be toward requiring more detail information on which to base regulatory review and acceptance. Although there will be strong incentives to develop "standard" reprocessing plant designs for improved reliability, cost savings and reliability which might also facilitate review procedures, it is expected that nuclear projects in the time period of interest will require three or more years of engineering and licensing effort prior to initiation of plant construction.

Based on the assumption that fuel would not be reprocessed until sufficient load was available to support full-level operation, the time requirements shown for completion of construction, installation and shakedown of process systems are not critical to this study. There would be incentives for completing fuel storage facilities as early as practicable, however, to avoid potential impact on reactor operations.

4.5.4.2 SPECIFIC COST PROJECTIONS. Cost data for the various study case reprocessing plants are summarized in Tables 4-19 through 4-23. Effort was made to account for every identified element of cost, including appropriate uncertainty allowances for each. The contingency shown is intended to cover as yet unidentified activity require-

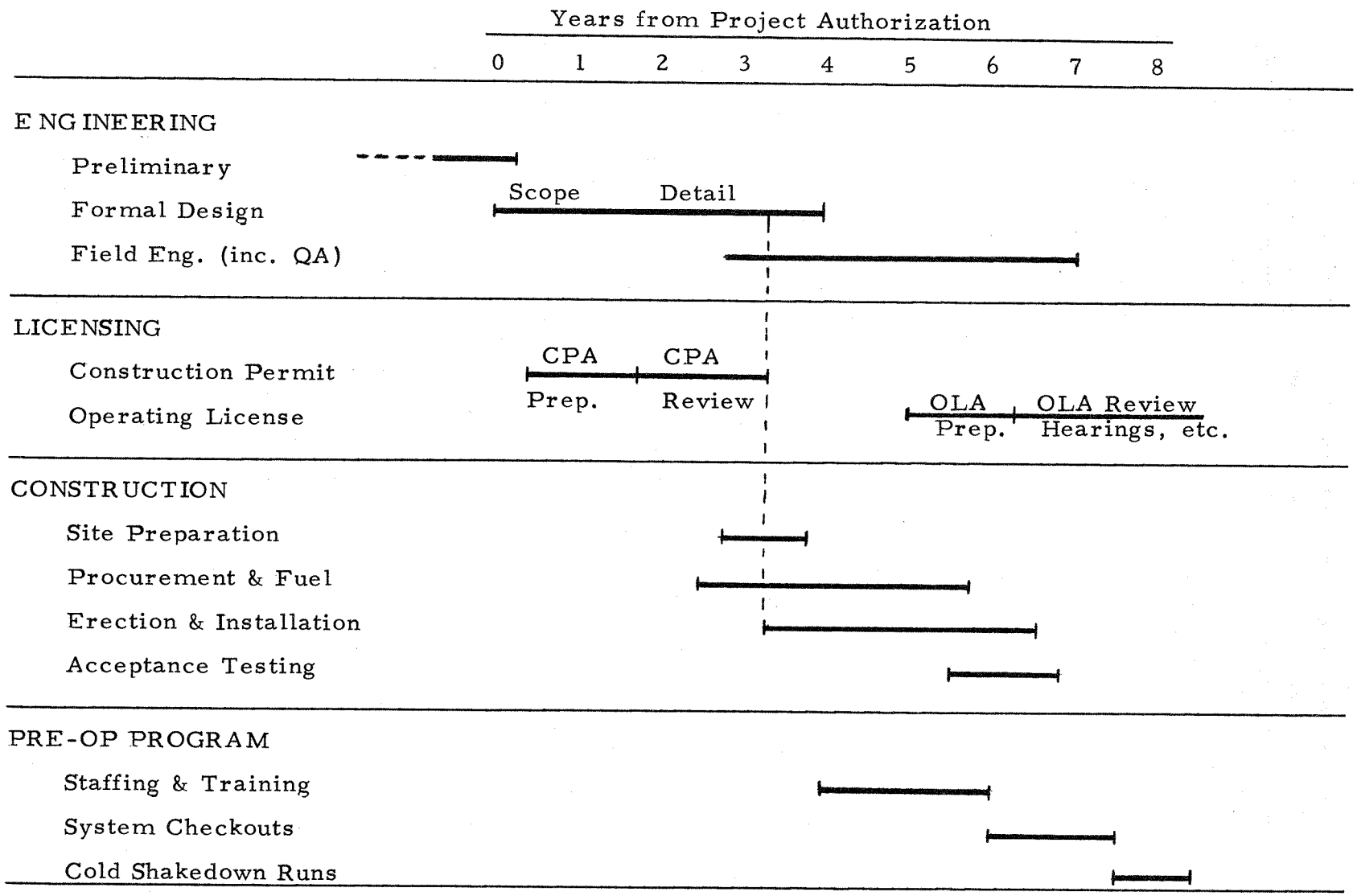

Figure 4-44 Typical Reprocessing Plant Project Schedule

Table 4-19 Reprocessing Plant Project Costs - 1500 MT HM/Yr Dispersed Site Case

	JAN. 1975 DOLLARS IN MILLIONS
SITING*	5
SITE STRUCTURES AND FACILITIES	105
PROCESS AND SUPPORT EQUIPMENT	142
ENVIRONMENTAL PROTECTION PROVISIONS	36
INDIRECT COSTS	92
CONTINGENCY	95
TOTAL PROJECT COSTS	475

* NOT INCLUDING COST OF LAND; APPROXIMATELY 1500 ACRES REQUIRED TO PROVIDE NECESSARY CONTROLLED ACCESS AREA AND ISOLATION DISTANCE FOR DISPERSED SITING OF SUCH A REPROCESSING PLANT COLOCATED WITH MATCHING MO_2 FUEL FABRICATION FACILITIES.

Table 4-20 Reprocessing Plant Project Costs - 160 MT HM/Yr Park Case

	JAN. 1975 DOLLARS IN MILLIONS
SITING*	5
SITE STRUCTURES AND FACILITIES	20
PROCESS AND SUPPORT EQUIPMENT	35
ENVIRONMENTAL PROTECTION PROVISIONS	9
INDIRECT COSTS	46
CONTINGENCY	29
TOTAL PROJECT COSTS	144

* NOT INCLUDING COST OF LAND; CONTROLLED ACCESS AREA AND ISOLATION DISTANCE REQUIREMENTS SHOULD BE WITHIN THOSE FOR THE MULTIPLE REACTOR INSTALLATION SERVED.

Table 4-21 Reprocessing Plant Project Costs - 800 MT HM/Yr Park Case

	JAN. 1975 DOLLARS IN MILLIONS
SITING*	5
SITE STRUCTURES AND FACILITIES	64
PROCESS AND SUPPORT EQUIPMENT	92
ENVIRONMENTAL PROTECTION PROVISIONS	25
INDIRECT COSTS	73
CONTINGENCY	65
TOTAL PROJECT COSTS	324

* NOT INCLUDING COST OF LAND; CONTROLLED ACCESS AREA AND ISOLATION DISTANCE REQUIREMENTS WOULD BE WELL WITHIN THOSE FOR THE MULTIPLE REACTOR INSTALLATIONS SERVED.

Table 4-22 Reprocessing Plant Project Costs - 2450 MT HM/Yr Park Case

	JAN. 1975 DOLLARS IN MILLIONS
SITING*	5
SITE STRUCTURES AND FACILITIES	155
PROCESS AND SUPPORT EQUIPMENT	200
ENVIRONMENTAL PROTECTION PROVISIONS	53
INDIRECT COSTS	123
CONTINGENCY	134
TOTAL PROJECT COSTS	670

* NOT INCLUDING COST OF LAND; CONTROLLED ACCESS AREA AND ISOLATION DISTANCE REQUIREMENTS WOULD BE WITHIN THOSE FOR THE MULTIPLE REACTOR INSTALLATIONS SERVED.

Table 4-23 Reprocessing Plant Project Costs - 4000 MT HM/Yr Park Case

	JAN. 1975 DOLLARS IN MILLIONS
SITING*	5
SITE STRUCTURES AND FACILITIES	210
PROCESS AND SUPPORT EQUIPMENT	278
ENVIRONMENTAL PROTECTION PROVISIONS	70
INDIRECT COSTS	157
CONTINGENCY	180
TOTAL PROJECT COSTS	900

* NOT INCLUDING COST OF LAND; CONTROLLED ACCESS AREA AND ISOLATION DISTANCE REQUIREMENTS WOULD BE WITHIN THOSE FOR THE MULTIPLE REACTOR INSTALLATIONS SERVED.

ments and costs. Operating and maintenance costs for each of the study cases are shown in Tables 4-24 through 4-28.

4.5.4.3 PROJECT SCHEDULES. The sequence and duration of reprocessing plant design and construction activities for each of the energy park cases is shown in Figures 4-45 through 4-48 based on previously identified assumptions in regard to need date. The alternative of initial operation at some intermediate level and later "stretch" to full equilibrium capacity is potentially feasible. For the larger plants in particular, the gradual growth in available load would be better matched and peak fuel storage requirements minimized by such an approach. Total project costs would be potentially lower because operation at the intermediate level would provide much firmer bases for final design of full level systems. However, such differences would not have significant impact on overall study conclusions.

4.5.5 Conclusions and Recommendations.

It is concluded that incorporation of fuel reprocessing plants into LWR energy parks is generally feasible in the time frame of interest. Because of delays in development of the commercial reprocessing business, resulting largely from uncertainties regarding regulatory requirements and constraints, prior plant experience on which to base designs and operating plans would be limited. HTGR and LMFBR fuel reprocessing plants, if feasible at all in this time frame, would be essentially first-of-a-kind designs.

For the 26000 MWe case, spent fuel from onsite LWR power plants only would provide sufficient load for a reprocessing plant of reasonable size. Investment requirements would be about $11.5 per installed kWe served and reprocessing costs, not including associated waste management and transportation functions, would not be substantially different than for the comparative dispersed site case (0.05 to 0.06¢/kWhr depending on financing). For a 5200 MWe LWR park, the reprocessing plant would be well below optimum size with investment requirements over $28.6 per kWe and reprocessing costs about three times those for the dispersed site case, so that disposal of spent fuel unreprocessed would appear to be more attractive economically. The largest size reprocessing plant considered (sized to serve about 130,000 MWe of reactor capacity) would have favorable investment and unit reprocessing service costs but may be beyond the optimum size for a single plant (probably about 3000 MTU/yr).

From the viewpoint of reprocessing, the concept of multiple uranium fueled LWR parks shipping spent fuel to a single Pu burning park at which reprocessing and refabrication plants of near optimum capacity are provided appears to offer the most promise.

Table 4-24 Reprocessing Plant Annual Operating Costs - 1500 MT HM/Yr Dispersed Site Case

	JAN. 1975 DOLLARS IN MILLIONS
FIXED COSTS	
EMPLOYEES*	11
TAXES AND INSURANCE	9
DECOMMISSIONING FUND	5
OTHER (LICENSES, SECURITY AND FIXED UTILITIES)	2
VARIABLE COSTS	
CHEMICALS AND UTILITIES (~ $4200/MTHM)	6
NON-REUSEABLE WASTE CANS (~ $2000/MTHM)	3
EQUIPMENT REPLACEMENT ALLOWANCE	10
TOTAL OPERATING AND MAINTENANCE**	46

* STAFFING REQUIREMENTS FOR A GIVEN PLANT ARE VIRTUALLY INDEPENDENT OF THROUGHPUT.

** NOT INCLUDING DEPRECIATION, RETURN-ON-INVESTMENT, ETC.

Table 4-25 Reprocessing Plant Annual Operating Costs - 160 MT HM/Yr Park Case

	JAN. 1975 DOLLARS IN MILLIONS
FIXED COSTS	
EMPLOYEES*	6
TAXES AND INSURANCE	3
DECOMMISSIONING FUND	2
OTHER (LICENSES, SECURITY AND FIXED UTILITIES)	1
VARIABLE COSTS	
CHEMICALS AND UTILITIES (~$4200/MTHM)	1
NON-REUSEABLE WASTE CANS, ETC (~$2000/MTHM)	
EQUIPMENT REPLACEMENT ALLOWANCE	3
TOTAL OPERATING AND MAINTENANCE**	16

* STAFFING REQUIREMENTS FOR A GIVEN PLANT ARE VIRTUALLY INDEPENDENT OF THROUGHPUT.

** NOT INCLUDING DEPRECIATION, RETURN-ON-INVESTMENT, ETC.

Table 4-26 Reprocessing Plant Annual Operating Costs - 800 MT HM/Yr Park Case

	JAN. 1975 DOLLARS IN MILLIONS
FIXED COSTS	
EMPLOYEE*	9
TAXES AND INSURANCE	6
DECOMMISSIONING FUND	3
OTHER (LICENSES, SECURITY AND FIXED UTILITIES)	1
VARIABLE COSTS	
CHEMICALS AND UTILITIES (~$4200/MTHM)	3
NON-REUSEABLE WASTE CANS, ETC. (~$2000/MTHM)	2
EQUIPMENT REPLACEMENT ALLOWANCE	7
TOTAL OPERATING AND MAINTENANCE**	31

* STAFFING REQUIREMENTS FOR A GIVEN PLANT ARE VIRTUALLY INDEPENDENT OF THROUGHPUT.

** NOT INCLUDING DEPRECIATION, RETURN-ON-INVESTMENT, ETC.

Table 4-27 Reprocessing Plant Annual Operating Costs - 2450 MT HM/Yr

	JAN. 1975 DOLLARS IN MILLIONS
FIXED COSTS	
EMPLOYEE*	12
TAXES AND INSURANCE	13
DECOMMISSIONING FUND	7
OTHER (LICENSES, SECURITY AND FIXED UTILITIES)	2
VARIABLE COSTS	
CHEMICALS AND UTILITIES (~$4200/MTHM)	10
NON-REUSEABLE WASTE CANS, ETC. (~$2000/MTHM)	5
EQUIPMENT REPLACEMENT ALLOWANCE	13
TOTAL OPERATING AND MAINTENANCE**	62

* STAFFING REQUIREMENTS FOR A GIVEN PLANT ARE VIRTUALLY INDEPENDENT OF THROUGHPUT.

** NOT INCLUDING DEPRECIATION, RETURN-ON-INVESTMENT, ETC.

Table 4-28 Reprocessing Plant Annual Operating Costs - 4000 MT HM/Yr Park Case

	JAN. 1975 DOLLARS IN MILLIONS
FIXED COSTS	
EMPLOYEE*	14
TAXES AND INSURANCE	18
DECOMMISSIONING FUND	10
OTHER (LICENSES, SECURITY, AND FIXED UTILITIES)	2
VARIABLE COSTS	
CHEMICALS AND UTILITIES (~$4200/MTHM)	17
NON-REUSEABLE WASTE CANS, ETC. (~$2000/MTHM)	8
EQUIPMENT REPLACEMENT ALLOWANCE	19
TOTAL OPERATING AND MAINTENANCE**	88

* STAFFING REQUIREMENTS FOR A GIVEN PLANT ARE VIRTUALLY INDEPENDENT OF THROUGHPUT.

** NOT INCLUDING DEPRECIATIONS, RETURN-ON-INVESTMENT, ETC.

YEAR	YEARS FROM AWARD DATE	1000 MWe OPERATING	MTU/YR DISCHARGED	CUMULATIVE MTU DISCHARGED	MTU IN REACTOR POOL (AVE)	OVERALL PLANT DESIGN	FUEL STORAGE BASIN CONSTRUCTION	MTU IN STORAGE	PROCESSING FACILITY CONSTRUCTION	MTU/YR PROCESSED
	REACTORS - PARK ONLY				REPROCESSING PLANT					
0										
1	0	0	0							
2	0	0	0							
3	0	0	0							
4	0	0	0							
5	0	0	0							
6	0	0	0							
7	0	0	0							
8	0	0	0							
9	1.3	0	0							
10	2.6	20	20	20						
11	3.9	60	80	60				20		
12	5.2	100	180	100				80		
13	5.2	140	320	80				160		80
14	5.2	160	480	80				160		160
15	5.2	160	640	80				160		160

Figure 4-45 Park Case Project Schedule - 5200 MWe Energy

YEAR	YEARS FROM AWARD DATE	1000 MWe OPERATING	MTU/YR DISCHARGED	CUMULATIVE MTU DISCHARGED	MTU IN REACTOR POOL (AVE)	OVERALL PLANT DESIGN	FUEL STORAGE BASIN CONSTRUCTION	MTU IN STORAGE	PROCESSING FACILITY CONSTRUCTION	MTU/YR PROCESSED
	REACTORS - PARK ONLY				REPROCESSING PLANT					
0	0	0	0	0				0		0
1	0	0	0	0				0		0
2	0	0	0	0				0		0
3	0	0	0	0				0		0
4	0	0	0	0				0		0
5	0	0	0	0				0		0
6	0	0	0	0				0		0
7	0	0	0	0				0		0
8	1.3	0	0	0				0		0
9	2.6	20	20	20				0		0
10	3.9	60	80	60				0		0
11	5.2	100	180	100				80		0
12	6.5	140	320	80				240		0
13	7.8	180	500	100				400		0
14	9.1	220	720	120				600		0
15	10.4	260	980	140				840		0
16	11.7	300	1280	160				1120		0
17	13.0	340	1620	180				1440		0
18	14.3	380	2000	200				1600		200
19	15.6	420	2420	220				1600		400
20	16.9	460	2880	240				1440		600
21	18.2	500	3380	260				1120		800
22	19.5	540	3920	280				840		800
23	20.8	580	4500	300				600		800
24	22.1	620	5120	320				400		800
25	23.4	660	5780	340				240		800
26	24.7	700	6580	360				220		800
27	26.0	740	7320	380				140		800
28	26.0	780	8100	400				100		800
29	26.0	800	8900	400				100		800
30										

Figure 4-46 Project Schedule - 26,000 MWe LWR Energy Park

YEAR	YEARS FROM AWARD DATE	1000 MWe OPERATING	MTU/YR DISCHARGED	CUMULATIVE MTU DISCHARGED	MTU IN REACTOR POOL (AVE)	OVERALL PLANT DESIGN	FUEL STORAGE BASIN CONSTRUCTION	MTU IN STORAGE	PROCESSING FACILITY CONSTRUCTION	MTU/YR PROCESSED
	REACTORS - PARK ONLY*					REPROCESSING PLANT				
0	0	0	0	0				0		0
1	0	0	0	0				0		0
2	0	0	0	0				0		0
3	0	0	0	0				0		0
4	0	0	0	0				0		0
5	0	0	0	0				0		0
6	0	0	0	0				0		0
7	0	0	0	0				0		0
8	1.3	0	0	0				0		0
9	2.6	20	20	20				0		0
10	3.9	60	80	60				0		0
11	5.2	100	180	100				240		0
12	6.5	140	320	80				720		0
13	7.8	180	500	100				1200		0
14	9.1	220	720	120				1800		0
15	10.4	260	980	140				2520		0
16	11.7	300	1280	160				2760		600
17	13.0	340	1620	180				2520		1200
18	14.3	380	2000	200				2400		1200
19	15.6	420	2420	220				1800		1800
20	16.9	460	2880	240				1280		1800
21	18.2	500	3380	260				960		960
22	19.5	540	3920	280				720		1800
23	20.8	580	4500	300				600		1800
24	22.1	620	5120	320				600		1800
25	23.4	660	5780	340				720		1800
26	24.7	700	6580	360				1260		1800
27	26.0	740	7320	380				1020		2400
28	26.0	780	8100	400				900		2400
29	26.0	800	8900	400				900		2400
30										

* THIS SCHEDULE SHOWN REPRESENTS THE PARK REACTORS ONLY, AND REPROCESSING PLANT REQUIREMENTS REFLECT THE EXCESS FUEL LOAD FROM SATELLITE REACTORS BUILD ON THE SAME SCHEDULE AS THE PARK REACTORS.

Figure 4-47 Project Schedule - 26,000 MWe PuB Energy Park

YEAR	YEARS FROM AWARD DATE	1000 MWe OPERATING	MTU/YR DISCHARGED	CUMULATIVE MTU DISCHARGED	MTU IN REACTOR POOL (AVE)	OVERALL PLANT DESIGN	FUEL STORAGE BASIN CONSTRUCTION	MTU IN STORAGE	PROCESSING FACILITY CONSTRUCTION	MTU/YR PROCESSED
	REACTORS - PARK ONLY*				REPROCESSING PLANT					
0										
1	0	0	0	0				0		0
2	0	0	0	0				0		0
3	0	0	0	0				0		0
4	0	0	0	0				0		0
5	0	0	0	0				0		0
6	0	0	0	0				0		0
7	0	0	0	0				0		0
8	0	0	0	0				0		0
9	1.3	0	0	0				0		0
10	2.6	20	20	20				0		0
11	3.9	60	80	60				0		0
12	5.2	100	180	100				400		0
13	6.5	140	320	80				1200		0
14	7.8	180	500	100				2000		0
15	9.1	220	720	120				3000		0
16	10.4	260	980	140				4200		0
17	11.7	300	1280	160				5600		0
18	13.0	340	1620	180				5700		1500
19	14.3	380	2000	200				4500		3000
20	15.6	420	2420	220				3500		3000
21	16.9	460	2880	240				2700		3000
22	18.2	500	3380	260				2100		3000
23	19.5	540	3920	280				1700		3000
24	20.8	580	4500	300				1500		3000
25	22.1	620	5120	320				1500		3000
26	23.4	660	5780	340				1700		3000
27	24.7	700	6580	360				1600		4000
28	26.0	740	7320	380				1200		4000
29	26.0	780	8100	400				1000		4000
30	26.0	800	8900	400				1000		1000

* THE SCHEDULE SHOWN REPRESENTS THE PARK REACTORS ONLY AND THE REPROCESSING PLANT REQUIREMENTS REFLECT THE EXCESS FUEL LOAD FROM SATELLITE REACTORS BUILT ON THE SAME TIME SCHEDULE AS THE PARK REACTORS.

Figure 4-48 Project Schedule - 26,000 MWe PuB Park With Excess Reprocessing Capacity

Subchapter Contents

		Page No.
4.6	NUCLEAR FUEL FABRICATION	4-166
4.6.1	Introduction	4-166
4.6.1.1	TASK OBJECTIVES	4-166
4.6.1.2	AVAILABLE RESOURCES	4-166
4.6.1.3	KEY ISSUES	4-168
4.6.1.4	METHOD OF EVALUATION	4-170
4.6.2	Bases and Assumptions	4-170
4.6.2.1	REGULATORY	4-170
4.6.2.2	FUNCTIONAL REQUIREMENTS	4-171
4.6.2.3	PROCESS & PLANT DESIGN CONSIDERATIONS	4-172
4.6.3	Reference Concepts	4-175
4.6.3.1	GENERAL DESCRIPTION	4-175
4.6.3.2	SPECIFIC CONCEPTS	4-182
4.6.3.3	CONCEPTS FOR FABRICATING OTHER THAN LWR FUELS	4-184
4.6.4	Costs and Schedules	4-184
4.6.4.1	GENERAL RELATIONSHIPS	4-184
4.6.4.2	SPECIFIC COST PROJECTIONS	4-189
4.6.4.3	PROJECT SCHEDULES	4-189
4.6.5	Conclusions and Recommendations	4-189

4.6 NUCLEAR FUEL FABRICATION

4.6.1 Introduction

4.6.1.1 TASK OBJECTIVES. As an essential element of the nuclear fuel cycle, reactor fuel fabrication must be considered in evaluating nuclear energy park feasibility and viability. Fabrication plant costs, even for the highly engineered facilities required to produce Pu-bearing fuel, are a small fraction of those for the reactors they serve.

The primary objective of this task is to provide data on reactor fuel fabrication requirements and costs that may have significant impact on overall study conclusions. Because supply of "standard" UO_2 fuel for LWR reactors is assumed in the reference study to be from offsite sources, comparative data are developed only on MO_2 fuel for which it is necessary to:

(1) forecast the functional, regulatory and operational requirements that will apply to future MO_2 fuel fabrication activities,

(2) define representative plant concepts that will meet these requirements for each of the cases selected for study, and

(3) project plant facility and operating costs, implementation schedules and other factors of potential impact on the overall evaluation of park feasibility and viability.

4.6.1.2 AVAILABLE RESOURCES. Experience to date in commercial fabrication of UO_2 fuel for LWR power stations is relatively extensive. Fuel designs are firmly established and fabrication facilities and operations have been demonstrated on a production scale. Other fuel types have been developed and fabricated on an experimental or pilot scale for general demonstration of in-reactor performance capability but commercial experience is lacking. Production fuel designs have not yet been established and fabrication process and facility requirements for assuring necessary fuel performance characteristics have not been fully defined. For Pu-recycle (MO_2) fuels which are of principal interest in this study, demonstration rods and bundles have been fabricated in facilities (Table 4-29) designed primarily to handle "clean" Pu recovered from relatively low exposure fuel rather than that obtained from reprocessing of commercial power reactor fuel which is substantially more radioactive because of its high exposure. The fact that significantly more restrictive regulatory requirements have evolved since these prototype production facilties were designed and licensed also affects the validity of MO_2 fabrication experience to date as the basis for projecting future facility requirements and costs.

Table 4-29 Existing MO_2 Fuel Fabrication Facilities [3]

LICENSEE*	EXXON NUCLEAR	GENERAL ELECTRIC	KERR-McGEE	NUMEC	WESTINGHOUSE
LOCATION	RICHLAND, WASHINGTON	PLEASANTON, CALIFORNIA	CRESCENT, OKLAHOMA	PARKS TOWNSHIP, PENNSYLVANIA	CHESWICK, PENNSYLVANIA
CAPACITY MT/YR	15	3	5 - 10	20	10 - 15
FEED MATERIAL	$UO_2 + PuO_2$	NITRATE SOLUTION (U and Pu)	NITRATE SOLUTION (U and Pu)	NITRATE SOLUTION (U and Pu)	NITRATE SOLUTION (U and Pu)
PLANT PRODUCT	MO_2 FUEL ASSEMBLIES	MO_2 FUEL RODS	MO_2 FUEL RODS	MO_2 FUEL RODS	MO_2 FUEL RODS
PLUTONIUM POSSESSION LIMITS (kg)	10 UNENCAPSULATED 100 TOTAL	15	360	2000	120

* THERE ARE FOUR OTHER COMMERCIAL ORGANIZATIONS WITH LICENSES TO PROCESS PLUTONIUM FOR FUEL ROD MANUFACTURE BUT THEIR PRESENT PLUTONIUM POSSESSION LIMITS ARE TOO LOW FOR CONSIDERATION AS VIABLE MIXED-OXIDE FUEL MANUFACTURERS.

Three U.S. companies (Exxon Nuclear, General Electric and Westinghouse) are known to have done preliminary engineering work on commercial plants, to be built sometime after current regulatory uncertainties are resolved, which would be capable of producing MO_2 fuel for LWR use from high exposure Pu. The Construction Permit Application filed by Westinghouse under Docket No. 70-1432 is the most complete information published on a current production-scale fabrication plant concept.

In regard to colocation of fuel fabrication facilities with related activities, prior studies of potential nuclear energy park configurations have considered integration of both head end (UO_2 fuel) and back end (Pu recycle) functions. In addition some work has been done on colocation of fuel reprocessing and MO_2 fuel fabrication facilities to facilitate safeguarding of separated Pu.

For the present task, latest information available from industry and government agency publications on commercial plant concepts, regulatory trends, implementation costs and colocation effects has been utilized to provide suitable input data for evaluation of the alternative energy park study cases selected for consideration.

4.6.1.3 KEY ISSUES. The following three issues are of particular significance to the objectives of this task:

(1) Regulatory Requirements in the Time Period of Interest
(2) Extent of Process Line Mechanization, Remoteability, etc. Necessary in Future Production Plants
(3) Feasibility and Viability of Study Case Reactor Loading Plans

Regulatory Requirements in the Time Period of Interest. Requirements in the areas of process material confinement, resistance to operating and accident forces (earthquake, tornado, etc.), fire protection and nuclear criticality safety are generally well defined. However, continued escalation is indicated in requirements for protection against fissile material diversion and against loss of material control by deliberate intrusion or sabotage. Also, in the area of plant personnel and environmental protection, the "As Low As Practicable" regulatory philosophy is being applied with indications of significant potential impact on future facility requirements and costs. Finally, regulations currently are being proposed (Federal Register 39-178 pp. 32921-3) on collection, treatment and disposal of transuranium contaminated (Pu bearing) wastes which are defined so as to include virtually all nonproduct streams from a MO_2 fuel fabrication plant. Although the final form of these regulations and the details of related

Federal agency program plans have not yet been established, indications are that there will be substantial impact on production facility designs and operations.

Extent of Process Line Mechanization, Remoteability, etc. Necessary in Future Production Plants. Compliance with present personnel protection standards is difficult to achieve in hands-on (glove box) operated and contact maintained facilities processing Pu from high exposure fuel. Tighter personnel protection limits or more radioactive process materials would result in a step increase in facility complexity and cost. The need to handle materials of higher specific activity could result from:

- Future increases in goal exposures for power reactor fuels (certain to apply to breeder reactor fuels);

- Utilization of Pu recovered from recycle fuel (successive irradiations result in additional buildup of isotopes responsible for Pu radioactivity); or

- Possible regulatory requirements that the radioactivity associated with fissile Pu deliberately be maintained at high enough levels to deter diversion (by incomplete decontamination of recovered product or by "spiking" with specific radioisotopes).

Careful consideration must be given to study bases and assumptions in this area because of their effect on feasibility of alternative Pu utilization schemes as well as on facility requirements and costs for specific study cases.

Feasibility and Viability of Study Case Reactor Loading Plans. There appear to be continuing incentives for recycle of recovered Pu to nearer term (non-breeder) power reactors based on expected limitations in virgin U supply and enrichment capacity. Economic justification based on the value of recoverable U and Pu as LWR fuel feed materials being greater than the net cost of recovery and utilization is less clear. Assuming that future regulatory agency policies will allow Pu recycle, the effect of contingent constraints and implementation costs may be such as to make storage of spent fuel unreprocessed (so-called throwaway cycle) a more attractive alternative than recovery and return of U and Pu to the thermal reactor fuel cycle, at least until the need for these recoverable products to supplement normal fuel feed supplies becomes critical (i.e. is reflected in higher costs for UO_2 only fuel). Even if economically justified, the practic-

ability of higher MO_2 loadings in LWR power stations as called for in the Pu burner cases, and of multiple recycle of U and Pu as implied for long term equilibrium conditions has not been completely explored. All of these factors are considered in this study.

4.6.1.4 METHOD OF EVALUATION. As the first step in implementing this task, review was made of available information on existing (pilot plant) MO_2 fuel fabrication facility designs and operations and on proposed commercial production-scale plant concepts. A representative flowsheet was identified and adjusted as deemed necessary to account for expected regulatory and operational requirements including integration with fuel reprocessing functions on a common site. Based on this reference concept, facility requirements were identified and input data developed for the overall evaluation of energy park feasibility and viability.

4.6.2 Bases and Assumptions.

4.6.2.1 REGULATORY. The most basic assumption is of course that recycle of Pu through thermal reactors as well as breeders will be permitted as a matter of regulatory policy. Procedures for reaching a policy decision on Pu recycle were formally initiated with issuance by the AEC in September 1974 of a draft environmental impact statement on the use of recycled Pu as fuel in LWRs [12]. The general conclusion of the draft GESMO is that prompt reprocessing and full recycle of recovered Pu is the preferred course of action based on energy supply and economic considerations and that current and proposed regulations in regard to safeguarding Pu, waste management, etc. will assure that associated risks to public health and safety will be maintained at acceptable levels. Published comments on the draft GESMO indicate that considerable revision will be required to gain final industry and public acceptance. Public hearings for discussion of key issues are scheduled to be initiated prior to publication of the final GESMO (Federal Register 39-238, pg. 43101). Although a number of significant issues are being raised, the decision that MO_2 fuels may be used in LWRs is deemed likely to be made by the Nuclear Regulatory Commission after completion of the final GESMO and the public hearings thereon.

Amendments to applicable rules and regulations reflecting the decision to permit Pu recycle are expected to follow. These too will go through comment and public hearing procedures prior to final issuance. The effect of their ultimate scope and content on future plant facility and operating requirements is difficult to project at this time. Based on available information, the following general assumptions appear appropriate for this study.

Safeguards and Physical Protection. In response to concerns about Pu diversion potential, production-scale MO_2 fuel fabrication plants will have to be located at the same site as the reprocessing plants from which they obtain their input Pu. Thus the reprocessing/refabrication interface will be the same for the comparative dispersed siting case as for the various energy park facilities. Requirements for protection of fabrication plants and of the licensed materials contained therein will be more detailed and extensive than at present for all the cases considered but will not include Pu spiking to deter diversion. It is assumed that Pu accountability requirements will not preclude the use of reprocessing plant facilities to support fabrication operations in such areas as scrap recovery, etc.

Plant Safety and Environmental Protection. Requirements for process material confinement, resistance to operating and accident forces (earthquake, tornado, etc.), fire protection, nuclear criticality safety, etc. will be generally as set forth in current regulations and guides. Continuing application of the "As Low As Practicable" approach will result in (1) reduced exposure limits for operating personnel such as to require mechanization of process operations, and (2) tighter limits on offsite releases such as to require advanced effluent treatment systems. Consideration of environmental impact will be on a total site rather than individual plant basis.

Waste Treatment. As finally issued, regulations regarding management of transuranium contaminated wastes will be such as to require collection, consolidation, packaging and offsite transfer of all process related wastes from MO_2 fuel fabrication operations (including contaminated failed equipment). It is assumed that regulations will permit integration of related reprocessing and fabrication plant functions such as treatment of similar wastes in common facilities.

4.6.2.2 FUNCTIONAL REQUIREMENTS. It is assumed that individual fuel fabrication plants will be required to produce only one general type of MO_2 fuel. If breeder reactors are developed and applied for commercial power generation, there will be a demand for Pu to provide initial fuel inventories. Regulations are expected to preclude bulk shipment of separated Pu but possibly would permit shipment of finished fuel bundles under appropriate controls. Design of facilities to fabricate MO_2 fuels for both LWRs and LMFBRs from LWR produced Pu is not out of the question. However, it is more likely that separate lines would be provided to utilize LWR produced Pu for LMFBR fuel, possibly as an addition to an LWR support facility, to be designed and installed after LMFBR fuel design details, fabrication process constraints and capacity requirements have been fully defined.

In regard to MO_2 fuel designs for use in LWR power reactors, it is assumed that Pu will be distributed in the core lattice for near optimum utilization rather than uniformly which will result in MO_2 bundles containing some UO_2-only rods as well as differing proportions of PuO_2 in individual MO_2 rods. Thus the MO_2 fuel fabrication plants must include parallel lines and/or provisions for clean-out between batches to meet accountability, quality control and operating efficiency requirements.

It is assumed that colocated fuel reprocessing facilities will provide necessary input Pu for the MO_2 fuel fabrication plant (some of which will have been recovered from irradiated MO_2 fuel) in the form of PuO_2 powder suitable for direct utilization (dry mechanical head end operations only). UO_2 feed material also is assumed to be delivered to the plant in ready-to-use form from offsite sources which would supply fuel rod tubing and end plugs as well as bundle fittings, UO_2 fuel rods and such other hardware as may be necessary for assembly of complete MO_2 fuel bundles ready for reactor loading. The functions assumed to be provided within the fuel fabrication plant, then, are as shown in Figure 4-49.

4.6.2.3 PROCESS AND PLANT DESIGN CONSIDERATIONS. UO_2 fuel fabrication process technology is directly applicable to MO_2 fuel production. System layouts and equipment details will differ because of the shielding and confinement requirements for Pu but sound bases are available for fabrication flowsheet selection and process design. Variations among existing pilot plant and proposed commercial facility process operations principally are in the U/Pu blending function (liquid blending and coprecipitation versus dry blending) and in support systems (scrap recovery, waste treatment, etc.) which are particularly affected by regulatory trends and for which production-scale experience has not yet been obtained. Study of the various alternative approaches indicates that the scope of facility requirements and costs are not affected significantly by the particular choices made in these areas as long as essential functions are provided. On this basis, the flowsheet shown in Figure 4-50 is assumed to be appropriate for development of input data to the evaluation of energy park resource requirements and performance capability.

In regard to plant and equipment design concepts, it is deemed likely that shielding requirements to meet expected personnel exposure limits for systems utilizing Pu from high exposure fuel will make direct (glove box) operation impractical. On this basis it is assumed that process systems will be mechanized so as to limit personnel access requirements to set up operations prior to actual fabrication, and periodic adjustments when process materials are present

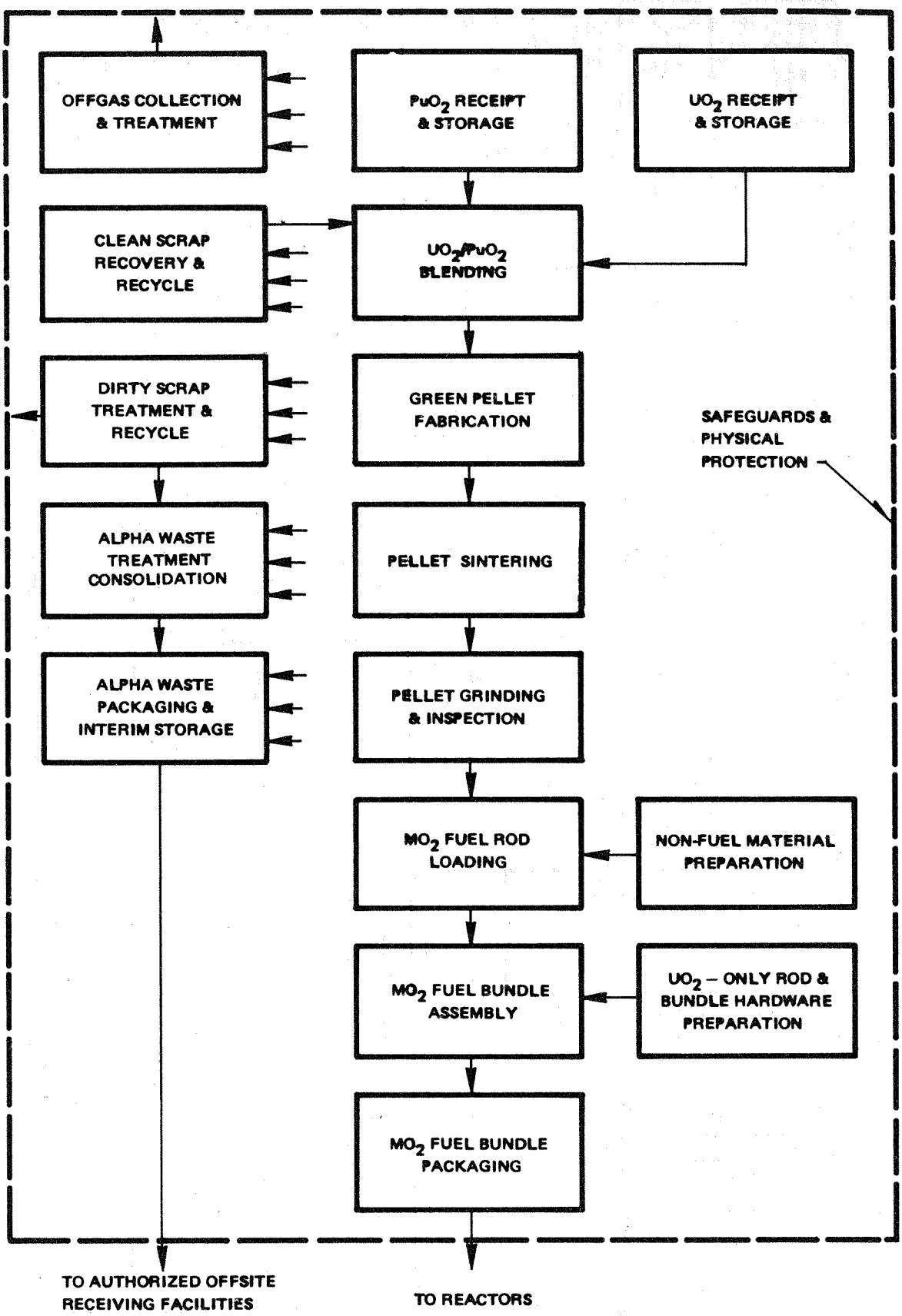

Figure 4-49 MO_2 Fuel Fabrication Plant Functions

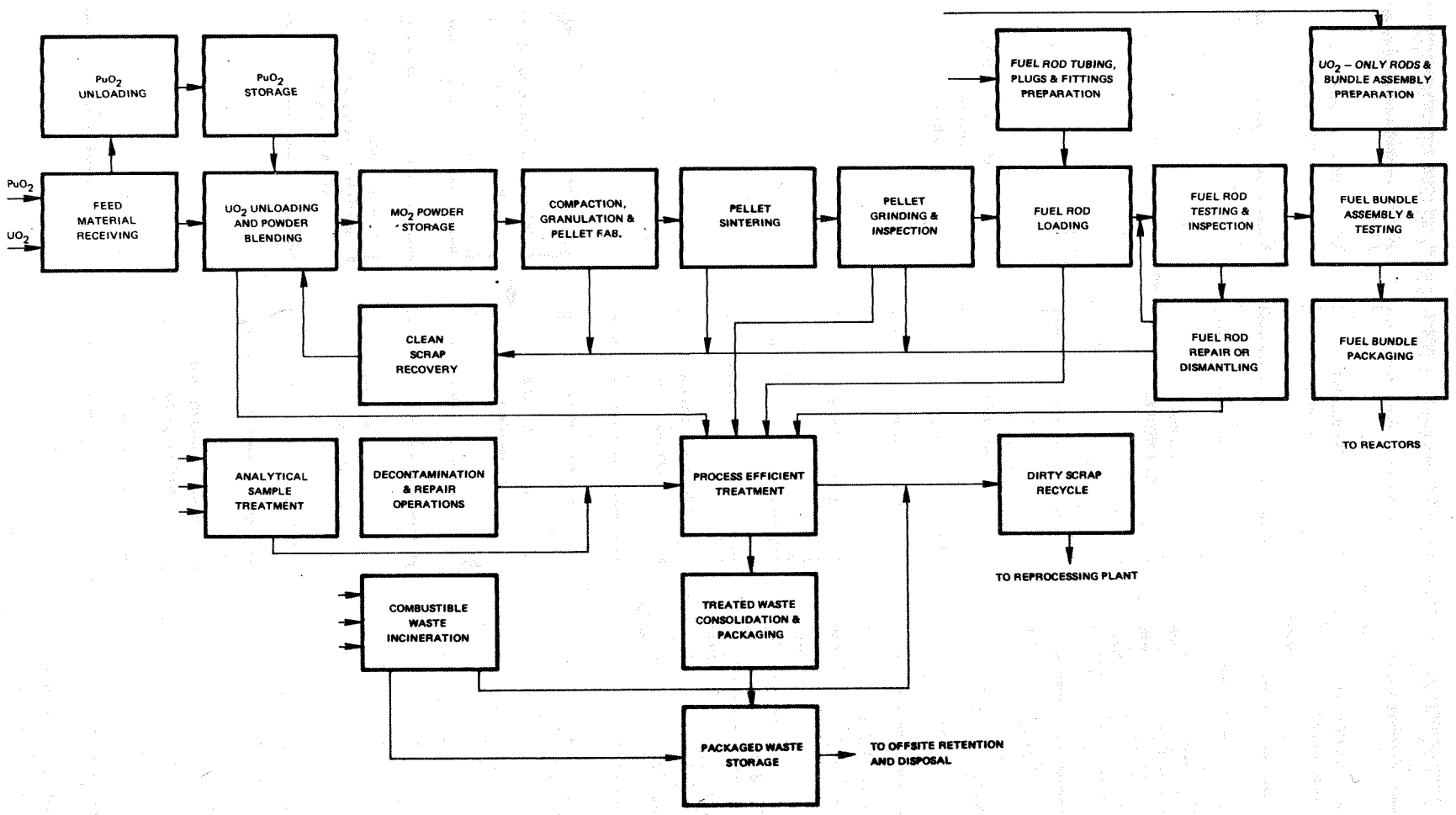

Figure 4-50 MO_2 Fuel Fabrication Plant Flowsheet

(as in ALKEM plant). Equipment repair and replacement activities with process materials removed are assumed to be by contact (glove box type) methods.

4.6.3 Reference Concepts

4.6.3.1 GENERAL DESCRIPTION. Layout of plant facilities is generally similar for all of the study cases considered. A typical arrangement for a plant capable of utilizing all of the Pu recovered in a closely coupled reprocessing plant of 1500 MTU/yr capacity (reference dispersed site case) is shown in Figure 4-41. Throughput capability is conservatively set at 500 $MTMO_2$/yr on the basis of the Pu yields projected for the study case reactors (~12.8 kg fissile Pu per MTHM in the mix of UO_2 and PuO_2 fuel under equilibrium recycle conditions as shown in Table 4-11) and recycle fuel with about 4% fissile Pu as PuO_2. Most projections have assumed lower Pu yields and higher percentages of PuO_2 in MO_2 fuel rods so that ratios of reprocessing plant throughput in MTU/yr to fabrication plant capacity in $MTMO_2$/yr have been nearer 5:1 than the 3:1 resulting from the bases and assumptions used here. Key elements of the reference plant concept can be described as follows:

Acreage Requirements. An independently sited MO_2 fuel fabrication plant would require sufficient acreage to provide a minimum distance of about 1/2 mile from process facilities to which uncontrolled public access would be permitted (700 to 1000 acres). As noted in the previous section, this area can be shared with other controlled access facilities if absence of deleterious interactions under operating and accident conditions can be assured. All of the study cases are based on colocated fuel reprocessing and fabrication facilities so that separate areas of limited public access are not required and a single security area can be utilized for both plants to meet safeguards and physical protection requirements.

The area actually occupied by fabrication plant facilities located within the security area (nuclear material receiving area, main manufacturing building, bundle assembly facilities, utility and service structures, etc.) varies with plant capacity but dispersed versus park siting has only minor effect. Non-process related facilities located outside the security fence (principally nonradioactive sewage treatment facilities, potable water supply, etc.) will be shared with colocated facilities, with the portion assignable to fuel fabrication having insignificant impact on overall area requirements.

Main Manufacturing Building. In the reference concept, colocated fuel reprocessing and MO_2 fuel fabrication facilities are housed in a single process building complex with a common wall separating the PuO_2 loadout area of the reprocessing portion, referred to earlier as the Main Process Building (MPB), from the feed material receiving area of the refabrication portion, here called the Main Manufacturing Building (MMB).

It is assumed that PuO_2 product will be moved from the MPB to the MMB in transfer containers for accountability purposes, although transfer lines which would keep the Pu always confined and eliminate the need for containers are conceivable.

All fuel fabrication equipment and systems which handle Pu and/or U in potentially mobile form will be located within the MMB which will be designed to provide confinement and control of such materials during normal fabrication operations and under credible accident and natural disaster conditions (fire, explosion, earthquake, tornado, etc.). Principal elements of the MMB, common to all study cases, include:

- Feed Material Receiving and Storage Area: Inside the Security fence, site roadways lead to a truck well and adjoining area in the MMB for receipt of UO_2 and PuO_2 in standard protective packages and for their storage while awaiting transfer to their proper unloading stations. Work space and facilities are provided for detecting and removing surface contamination on incoming packages and transport vehicles. The PuO_2 storage area is a shielded vault type enclosure with an inside access door to permit fork lift or dolly transfer of loaded containers to and from storage. Individual storage locations for each PuO_2 container are appropriately spaced and shielded. The separate UO_2 drum storage area is designed to less restrictive requirements. The amount of feed material storage provided is based on operating continuity considerations and thus will vary directly with plant capacity.

- Pu Unloading Area: Located near the PuO_2 storage vault is an unloading station for transfer of PuO_2 powder from the transfer or shipping packages to bulk storage/blending facilities. Separate compartments are provided for the successive operations which include (1) opening the sealed shipping package, (2) removing the inner containers of PuO_2 powder from the shipping package, (3) opening the

PuO_2 containers, weighing and sampling the contents, transferring them to bulk storage vessels and reweighing the emptied cans to assure completeness of transfer (all done remotely), and (4) disposing of the cleaned inner containers (compacted and packaged). Discrete container size as well as access restrictions dictate that multiple stations be provided for larger capacity plants.

- Bulk Pu Storage Area: PuO_2 powder storage vessels provide surge capacity for subsequent MO_2 pellet fabrication operations as well as capability for blending PuO_2 powders to produce homogeneous batches and for sampling the material for analysis. Vessel size is limited by criticality considerations so that multiple units are required.

- UO_2 Unloading and MO_2 Blending Area: Facilities are provided in this area for unloading UO_2 powder from sealed shipping containers into a UO_2 transfer hopper, receiving fresh PuO_2 powder from inplant storage and recycled PuO_2 powder from the Clean Scrap Recovery System, metering these powders through weigh hoppers to an MO_2 blender and preparing homogeneous batches of MO_2 powder of specified proportions. Provisions are included for assuring that moisture content limits (for criticality control) are met and for assuring confinement of process materials. Again, multiple lines are required for larger plants because of batch size and criticality control considerations.

- MO_2 Powder Storage: An area is provided for facilities in which output from the MO_2 blender is milled, sampled, stored until sample analysis results are known and then transported either to the slug press at required production rates or to the clean scrap recovery system. Unit sizes are limited by criticality considerations so that multiple units are required for larger plants.

- Green Pellet Fabrication and Storage: Integrated systems are provided in a designated location for compacting MO_2 powder into slugs, granulating the slugs, pressing the granules into pellets of specified size and density, loading the pellets into boats and storing the loaded boats for delivery to the sintering furnace at required production rates. Undersize granules are recycled to the slug press while oversized granules and rejected green pellets are treated as

recoverable scrap. Use of parallel units would be based more on operability considerations than specific size limitations.

- Sintering Furnace and Sintered Pellet Storage: A separate area is provided for a sintering furnace and associated systems which receive batches of green pellets in boats and sinter them to specified density under controlled atmosphere and temperature conditions. Provisions are included for pellet inspection and for resintering underfired pellets, routing overfired pellets to scrap recovery and storing acceptable pellets until required for downstream operations. Practicality considerations for contained units with necessary repair and replacement capability require multiple lines for larger plants.

- Pellet Grinding, Inspection and Storage: A designated location is provided for facilities in which pellets are received from the furnace storage area and surface ground to specified dimensions, inspected, dried and held for release as required by fuel rod assembly operations. Provisions are included for routing selected samples to analytical facilities, sending defective pellets to scrap recovery systems and reclaiming MO_2 from the grinder sludge. Parallel lines are required for larger plants based largely on operability considerations.

- Non-Fuel Material Preparation: Facilities for receipt, inspection, cleaning and storage of fuel rod hardware (tubing, end plugs, springs) are located in a separate area. Bottom end plugs are welded into the tubes prior to delivery to the fuel rod loading station.

- Fuel Rod Loading Area: A designated location is provided for systems in which MO_2 pellets are loaded into fuel tubes, springs are inserted and top end plugs are welded in place under closely controlled conditions. Provisions are included for assuring absence of contamination on rod external surfaces prior to removal from the "glove box" environment required for rod loading operations. The nature of these operations is such as to require parallel lines to achieve production rates.

- Fuel Rod Inspection Area: Facilities for determining whether sealed rods meet production specifications are grouped in a designated location. Provisions are made for helium leak

testing, x-ray inspection, enrichment scanning and checking for rod straightness, weld quality, diameter, weight and surface condition. Area is provided for certified rod collection and storage while awaiting transfer to the bundle assembly area. Reject rods are collected for routing to the rod repair and dismantling area. A single integrated inspection station can handle all but the largest plant production rates.

- Scrap Recovery: Designated areas are provided for "clean" process scrap collection and treatment systems which recover fuel materials for recycle. Sources would be reject MO_2 powders, green and sintered pellets, and rods (after dismantling) which would constitute $>$ 90% of the scrap from fabrication operations. The dry process system includes crushers, reduction/oxidation/reduction reactors and support equipment required to produce homogeneous batches of MO_2 powder which can be certified analytically to be acceptable as blend stock for pellet fabrication. Provisions also are made for processing unpure but recoverable MO_2 scrap which includes incinerator ash and solutions from leaching of contaminated equipment. This wet system consists of dissolvers and solvent extraction columns for coextracting U and Pu from the various impurities in nitrate solution form for routing to the colocated reprocessing plant where the Pu and U are partitioned and the recovered Pu combined with the main reprocessing plant Pu stream for eventual conversion to PuO_2. In regard to variation of scrap recovery area and equipment requirements as a function of capacity, the number of geometrically-safe collection bins required will increase directly with throughput rate.

- Waste Treatment: Facilities for collection and treatment of Pu contaminated waste streams are located within the MMB complex. Reprocessing plant facilities would be used to the extent practical for liquid waste conversion (to forms meeting Federal agency acceptability requirements for ultimate disposal), packaging and interim storage. Provisions for incinerating combustible wastes and processing failed Pu contaminated equipment for disposal would be capable of handling similar materials from reprocessing plant operations. Gaseous waste treatment systems would be separate.

- Operating Areas: Operating control stations for the major process line functions are provided at appropriate locations within the MMB. A supervisory console also is provided. Provisions are included for a computer system to be used for operating data accumulations, nuclear materials accountability, and process and quality control. Control area and equipment requirements do not vary greatly with plant capacity.

- Laboratory Areas: Facilities for performing necessary analyses on feed materials, process streams, fuel product, scrap and waste are located in designated areas of the MMB. Functional requirements would be integrated with those of the companion reprocessing plant but facilities typically would include a wet chemistry laboratory, a spectrographic laboratory, an analytical standards laboratory and a metallurgical and powder characterization laboratory. Area and equipment requirements would not vary much with plant capacity.

- Utilities and Services: Provisions are included in the MMB complex for ventilation and utility equipment, laundry facilities, process chemical supply systems, etc. Shop facilities (mechanical, electrical, instrument, piping, etc.) including a general hot shop also are provided.

- Offices, Change Rooms, etc: Areas are included in the MMB complex for location of operating staff personnel and direct support functions as well as for personnel access control, etc.

Bundle Assembly Facility. Equipment to assemble MO_2 fuel bundles for reactor insertion are housed in a separate enclosure of MMB. The reference concept is based on bundle designs which include UO_2 only as well as MO_2 fuel rods. The UO_2 rods and necessary bundle hardware would be received from a qualified offsite fabricator (same one that supplies UO_2 fuel bundles for the reactors in which the MO_2 bundles are to be loaded). To simplify operations, the reference concept is based on the UO_2 rods being assembled into bundles at the fabricator's plant with dummy rods in the positions to be occupied by MO_2 fuel rods. Work space and facilities then are provided in the MO_2 plant bundle assembly building for:

- UO_2 Subassembly Receiving and Storage: Fully certified preassembled fuel bundles having dummy rods (color coded to assure identity) installed in the MO_2 rod positions would be shipped by truck in standard containers. The receiving dock

and storage area for incoming containers is located in the bundle assembly building. The UO_2 subassemblies would be stored in their shipping containers until needed for MO_2 bundle assembly.

- MO_2 Rod Storage: An appropriately shielded and secured vault area is provided for storage of finished MO_2 fuel rods received from the MMB rod inspection area. Size of the vault and of the UO_2 subassembly storage area as well will vary directly with plant capactity.

- MO_2 Bundle Assembly: The principal work station consists of a subassembly container unloading area and bundle assembly table. An overhead crane is provided for removing subassemblies from their shipping container and transferring them to the assembly table (or to racks for storage until needed) where they would be clamped in a vertical position by appropriate fixtures. To facilitate subsequent operations, the assembly table for the reference plants is designed to return the clamped subassembly to a horizontal position in which end fittings would be removed and the dummy rods withdrawn. Necessary quality control checks on the subassembly then would be made. All activities to this point would be by direct contact methods. A mechanized insertion system is provided as part of the work station for remotely installing the MO_2 fuel rods in the vacant bundle positions under controllable pressure and alignment conditions. Provisions also are made for a movable shielding sleeve to be placed over the bundle body, leaving the top exposed so that upper end fittings can be reinstalled manually using elongated tools to minimize personnel exposure. A finished bundle check station also is located in the bundle assembly area for final quality verifications (leak tests, physical measurements, etc.). Practical limits to throughput rates for an individual assembly and checkout line of this type indicate that parallel facilities are required for larger plants.

- MO_2 Bundle Packaging and Storage: Work area is provided in the Bundle Assembly Building for loading certified bundles into protective packages and storing them until required for reactor loading. Provisions will vary among the reference cases depending on capacity and utilization plans.

4.6.3.2 SPECIFIC CONCEPTS

Dispersed Plant Case. Plant data for the comparative non-park case are included in Table 4-30. The capacity selected is consistent with the bases and assumptions indicated previously. In addition to parallel process lines, facility requirements at all stations are somewhat more extensive to permit production of a wider variety of bundle designs as probably would be necessary in a larger capacity facility serving dispersed reactors of varying core configurations and MO_2 loading plans.

5200 MWe Energy Park Case. MO_2 fuel fabrication facilities sized to process the Pu produced in only four LWRs of the reference capacity are feasible although smaller than optimum. Throughput rate requirements for the various unit operations are well within single line limits but necessary provisions for operating continuity, separation of batches having different Pu contents, etc. add to the scope of facility requirements relative to a simple single-line concept.

26000 MWe Energy Park Case. MO_2 fuel fabrication facilities capable of processing the Pu produced in a 20 reactor park complex must have multiple units for a number of process operations. Arrangement in parallel process lines would facilitate separation of fuel batches having different Pu contents, etc.

26000 MWe Pu-Burner Park Case. A recycle fuel plant capable of meeting the requirements of 20 reactors loaded with the maximum amount of Pu in MO_2 fuel would be near optimum size. Parallel lines are necessary to meet production rate requirements and would be utilized to permit fuels of differing Pu content, etc. to be produced concurrently.

26000 MWe Pu-Burner Park Case With Excess Pu Recovery Capability. The MO_2 fuel fabrication plant concept for this case is based on providing LWR reload fuel production capability to match onsite Pu burner reactor requirements and, ultimately, the capability to utilize Pu in excess of these requirements for production of breeder reactor fuel to meet initial inventory requirements as such reactors are brought on line. Provisions would be made in the MO_2 plant design for addition of breeder reactor fuel fabrication lines after design details and process requirements for such fuels had been established. Reload fuel for fast breeders would have to be fabricated in other facilities (integrated with fast reactor fuel reprocessing plants) but projected rates of breeder reactor additions in the far future indicate that continued utilization of LWR-produced Pu will be

Table 4-30 Reference Case MO_2 Fuel Fabrication Plant Data

		DISPERSED SITING CASE (PARA. 4.6.3.1)	5200 MWe ENERGY PARK N4PC*	26000 MWe Pu B PARK N6PD*	5200 MWe Pu B PARK N4PD*	26000 MWe Pu B PARK N20PD'*
NOMINAL CAPACITY						
MO_2 RODS/YEAR	MT	500	50	250	165	825
ANNUAL INPUT						
Pu FISSLE	MT	19.4	1.9	9.4	6.2	31
Pu TOTAL	MT	~26	~2.5	~10.7	~8.3	~41
TOTAL Pu O_2	MT	~30	~2.9	~12	~9.4	~47
U in UO_2 POWDER	MT	424	41.5	207	138	687
TOTAL UO_2 POWDER	MT	480	47	238	157	779
ANNUAL OUTPUT						
U PLUS Pu in MO_2	MT	450	44	218	146	728
TOTAL MO_2	MT	510	50	250	166	820

* TABLE 4-11 CASES

required because breeding ratios are not sufficient to provide excess Pu for fueling new reactors on any reasonable time scale.

4.6.3.3 CONCEPTS FOR FABRICATING OTHER THAN LWR FUELS. Only general consideration has been given to functional requirements and plant concepts for fabricating recycle fuel for alternative reactor types such as HTGRs and LMFBRs. Published information is not sufficiently detailed to permit effective evaluation within the time and resource constraints of this study. The relative contribution of fuel fabrication to overall system requirements and costs for power generation with such reactor types appears to be of the same order as for the LWR cases considered.

4.6.4 Costs and Schedules

4.6.4.1 GENERAL RELATIONSHIPS.

Evaluation Procedures. Information available on UO_2 fuel production plants and pilot scale MO_2 fuel fabrication facilities as well as from studies of LWR recycle fuel production plants of various capacities was utilized to develop cost and schedule characterizations for the reference plant concepts. Bases were established for evaluating all necessary project and support activities including variation with plant capacity, etc. However, since no large scale facilities meeting current functional and regulatory requirements have been built, there were no directly applicable design and construction project data against which to check the results.

Cost Relationships. MO_2 fuel fabrication plant capital costs as a function of capacity are shown in Figure 4-51. Principal indications are that:

- Design and construction costs for MO_2 fuel fabrication plants will be substantially higher than projected in previously published fuel cycle cost evaluations, largely because of additional provisions required for plant safety and personnel protection, nuclear material safeguards, waste management and quality assurance, but also because of allowances made in this study for recent trends in major facility project implementation costs. At a design capacity of 300 metric tons of MO_2 per year, for example, capital costs on the order of $100 million (January 1975 dollars) are indicated where support facilities are shared with a colocated reprocessing plant. This compares with preliminary engineering estimates in the $50 million range made in 1972 for an independent plant of similar process design and capacity.

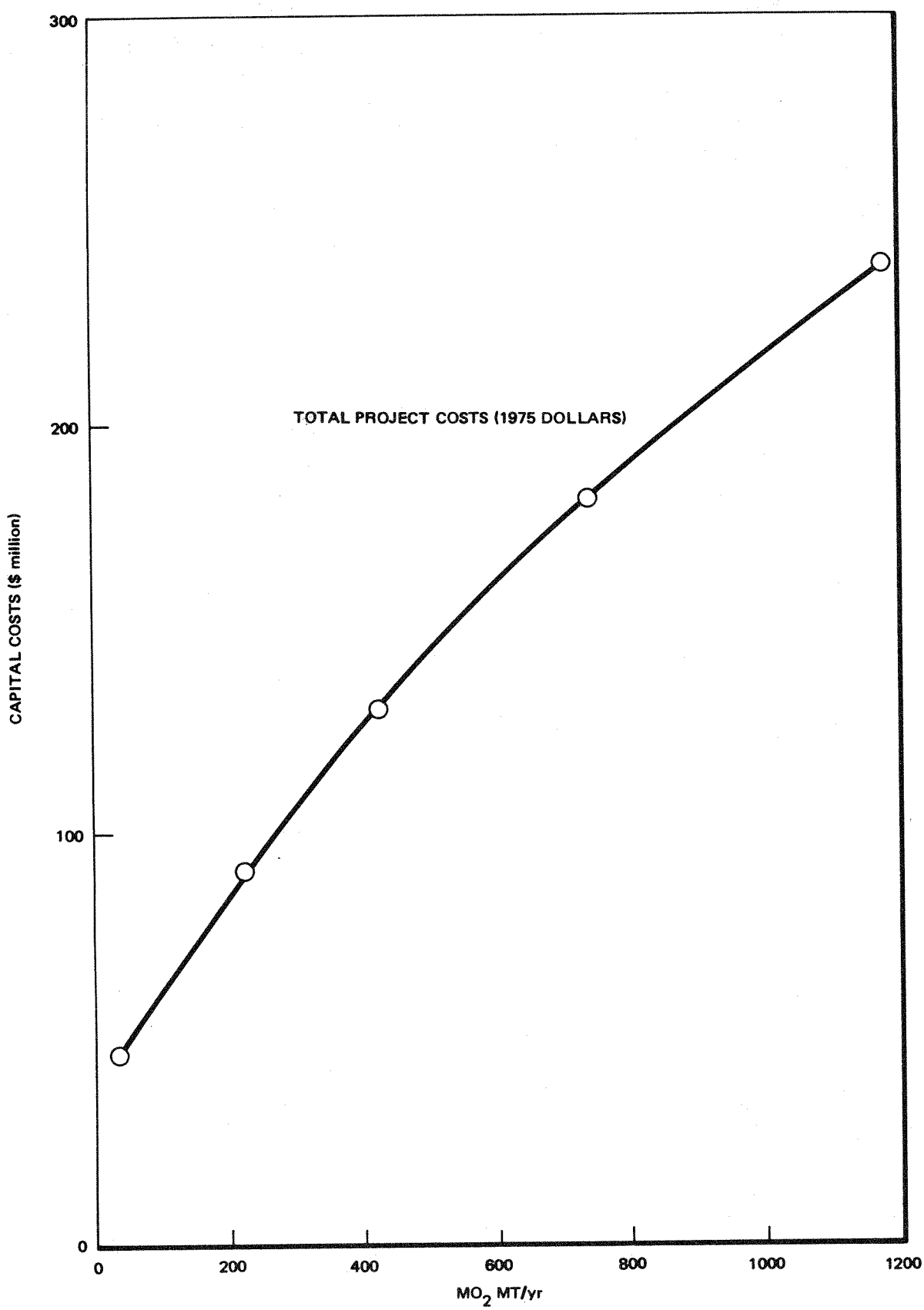

Figure 4-51 MO_2 Fuel Fabrication Plant Capital Costs vs Capacity

- There are no fabrication plant size limitations within the range of recycle fuel production rates covered by the reference study cases. Investment requirements per unit of capacity for the low end of the range considered are indicated to be ~2.5 times those for the largest size plants but even so they are a small fraction of the total capital costs per unit of nuclear power generating capacity.

MO_2 fuel fabrication operating costs as a function of capacity are shown in Figure 4-52, which indicates that:

- Unit costs for producing MO_2 fuel in future plants will vary with capacity and will entail cost penalties relative to UO_2-only fuel fabrication plants which are greater than have been projected in previously published studies. As in the case of capital costs, the operating costs for small plant MO_2 fuel fabrication may be up to ~2.5 times those for a large plant of the reference size, 500 $MTMO_2$/yr. Extrapolations for larger plants from MO_2 fuel fabrication experience to date result in much greater uncertainties than reprocessing plant extrapolations (Figure 4-43).

- In comparison to straight UO_2 fuel fabrication costs, it appears that necessary provisions for remote operations, safeguarding of Pu and treatment of Pu contaminated wastes will result in a fabrication cost ratio of possibly 3.5 to 4 for MO_2 fuel from production-scale plants (assembled bundle basis) instead of 1.5 to 2 as projected in early Pu recycle studies. In regard to absolute magnitude, it is noted that most recent bids ranged up to \$350/kg MO_2 for LWR recycle fuel to be fabricated in plants having annual capacities of 30 to 80 $MTMO_2$ but the relation of such bids to total production costs including depreciation and return on investment is not clear. Projections published in GESMO (WASH 1327) indicate fabrication costs in the \$150 to \$200/kg range for larger size plants. Results of this study indicate total fabrication costs of ~\$200/kg MO_2 for a plant of the reference concept at a design capacity of 300 to 500 $MTMO_2$/yr, including 15% discounted rate of return on investment after taxes which is not untypical for a high risk business.

Schedule Considerations. Evaluation of duration and sequencing requirements for the various activities involved in design, construction and licensing of future MO_2 fuel fabrication plants indicates (Figure 4-53) overall schedule requirements of 6.5 to 7.5 years from

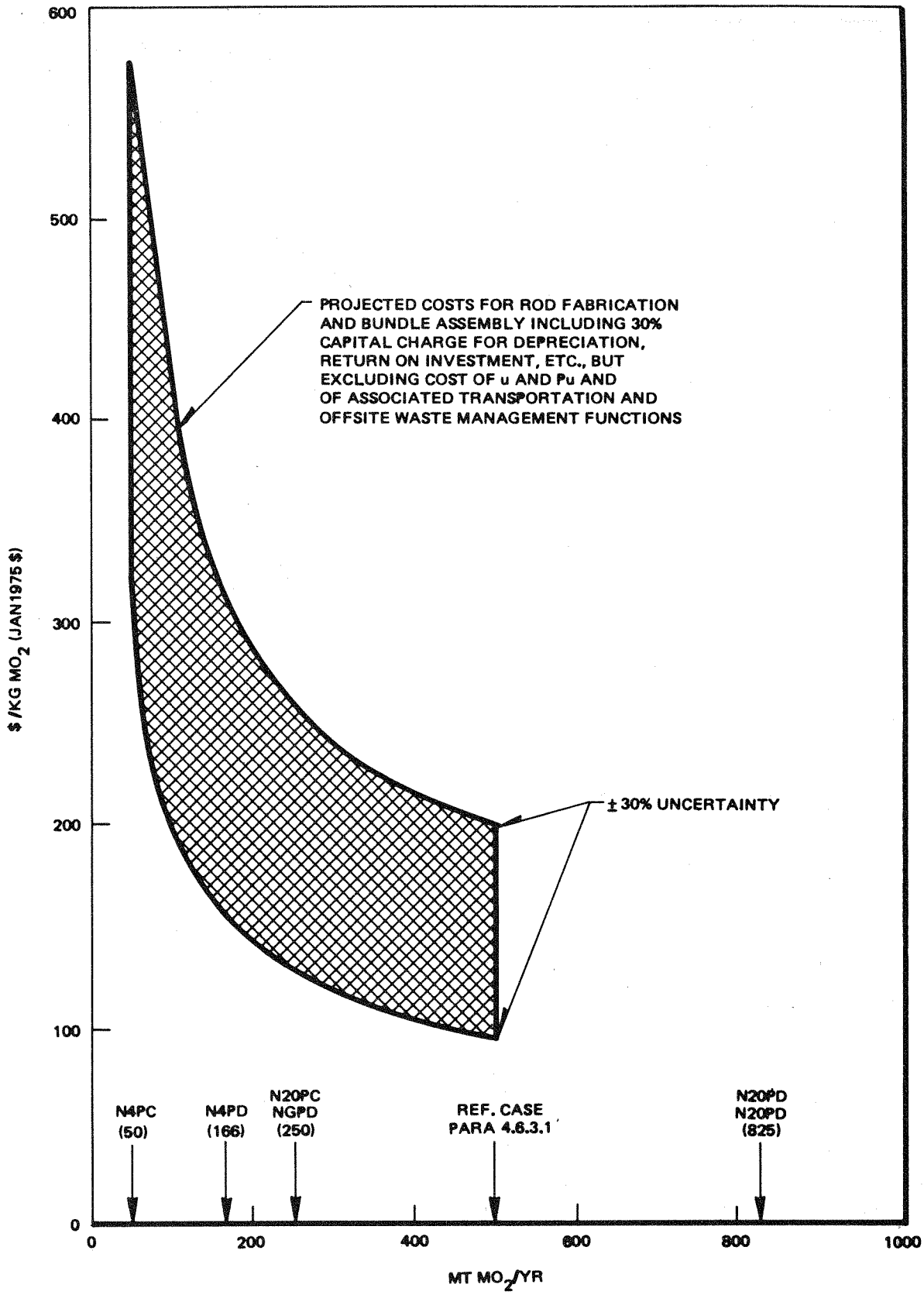

Figure 4-52 Unit MO_2 Fuel Fabrication Cost vs Capacity

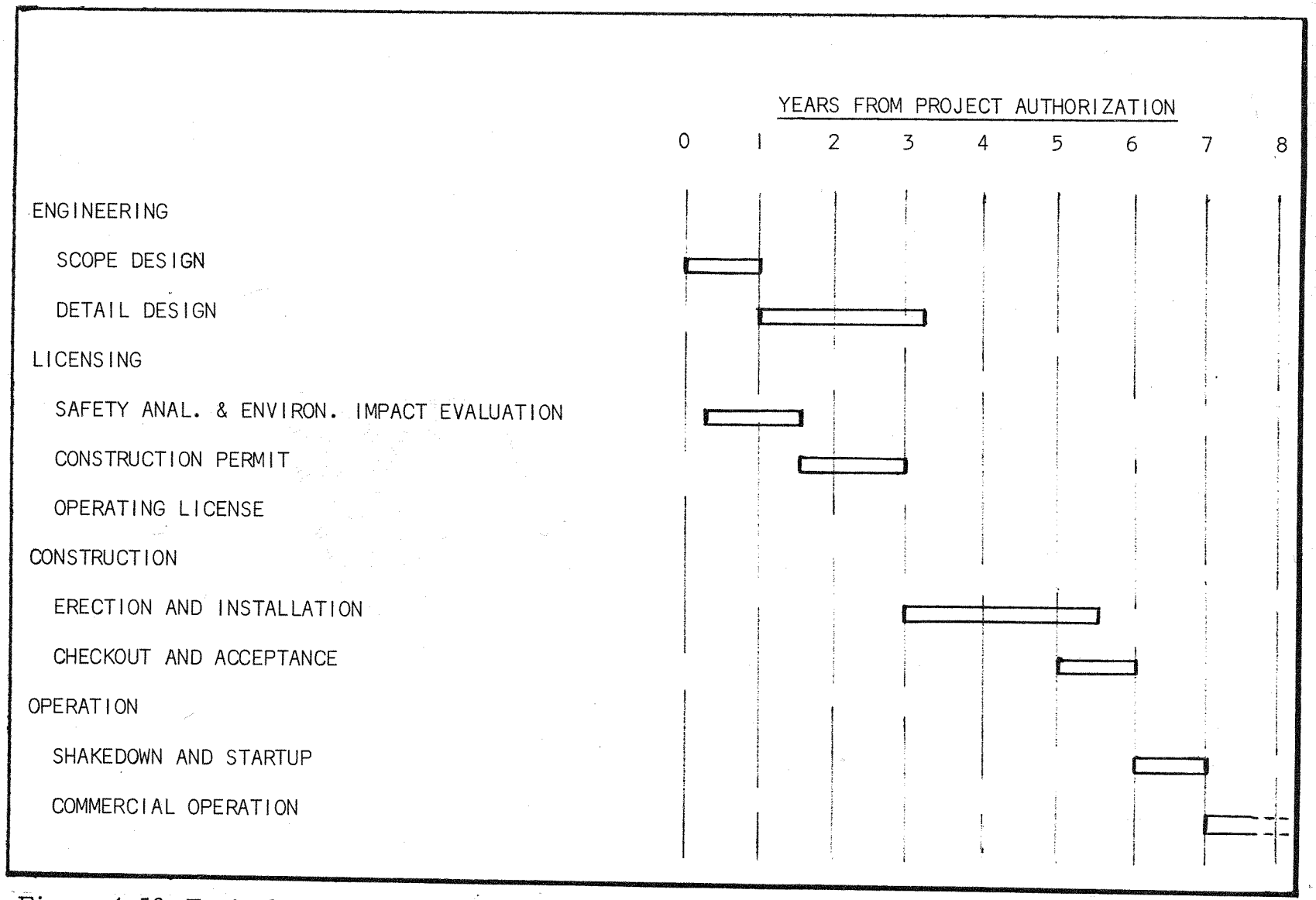

Figure 4-53 Typical MO_2 Plant Design and Construction Sequence

initiation of formal design to first useful production. A major contributor to schedule length is the time required for acquisition of a construction permit. Present and projected licensing procedures require safety and environmental impact analyses in support of construction permit applications to be based on firm design data regarding principal structures and systems (equivalent to at least 25% of the total design effort). Engineering work can and must proceed in parallel with regulatory review of the construction permit application but significant design features are subject to change until final approvals have been obtained following which field work can be initiated. Based on the assumption that reprocessing operations would not be initiated until sufficient spent fuel was available to support the full design throughput rate, the minimum time required to complete MO_2 plant facilities is not critical to this study.

4.6.4.2 SPECIFIC COST PROJECTIONS. Cost data for the various study case MO_2 fuel fabrication plants are summarized in Table 4-31. All identified elements of cost are included with appropriate uncertainty allowances. The contingency shown is intended to cover as yet unidentified activity requirements and costs. Operating and maintenance costs for each of the study cases are shown in Table 4-32.

4.6.4.3 PROJECT SCHEDULES. MO_2 plant design and construction project expenditure schedules for each of the energy park cases are shown in Table 4-33 based on projected availability of recovered Pu from companion reprocessing plants. Alternative schedules for bringing such facilities into full production are feasible, particular for the larger plants employing parallel process lines. However, impact on overall study conclusions would not be significant.

4.6.5 Conclusions and Recommendations - Nuclear Fuel Fabrication. It is concluded that colocation of LWR fuel reprocessing and recovered plutonium recycle fuel fabrication plants is generally feasible and probably will be required in the time frame of interest. Incorporation of close-coupled recovery and recycle facilities into LWR energy parks also is deemed feasible. When present uncertainties regarding regulatory requirements and constraints have been resolved (principally on physical protection of fissionable material), it will be possible to proceed with design and construction of production-scale plants. HTGR and LMFBR fuel fabrication plants probably could be built in the time frame of interest also but demonstrated process and equipment technologies necessary for installation of companion fuel reprocessing plants may not be available on an equivalent schedule, judging from review of currently published program plans.

Table 4-31 MO_2 Fuel Fabrication Plant Project Costs for Reference Study Cases

	CAPACITY - $MTMO_2$/YR				
	50	165	250	500	825
	$ MILLION (JAN. 1975 $)				
*SITING (INCLUDING LICENSES AND PERMITS FOR CONSTRUCTION	3.0	3.3	3.5	3.8	4.
SITE STRUCTURES AND FACILITIES	8.9	16.4	20.4	30.5	44.
PLANT EQUIPMENT	12.0	22.4	27.8	42.5	59.
INDIRECT COSTS	9.2	13.8	17.2	26.5	37.
CONTINGENCY	9.9	17.1	21.1	31.7	44.
TOTAL PROJECTS COSTS	43.	73.	90.	135.	188

*EXCLUSIVE OF LAND COSTS

Table 4-32 MO_2 Fuel Fabrication (Oper. & Maint.) Costs for Reference Study Cases

	CAPACITY - $MTMO_2$/YR				
	50	165	250	500	825
	$ MILLION (JAN. 1975 $)				
FIXED COSTS(1)					
EMPLOYEES(2)	4.3	5.9	7.0	9.0	10.5
TAXES AND INSURANCE	0.9	1.5	1.8	3.0	3.9
DECOMMISSIONING FUND	0.4	0.8	1.0	1.5	2.1
LICENSES AND PERMITS	0.6	0.6	0.6	0.6	0.6
OTHER	0.2	0.3	0.4	0.6	0.9
VARIABLE					
FABRICATION	0.4	1.2	1.9	3.8	6.2
WASTE PACKAGING	0.1	0.2	0.3	0.6	1.0
BUNDLE ASSEMBLY	0.1	0.3	0.5	1.0	1.7
EQUIP. MAINT. AND REPAIRS	2.4	3.9	4.8	7.8	10.3
TOTAL	9.4	14.7	18.3	27.9	37.2

(1) DOES NOT INCLUDE DEPRECIATION, RETURN ON INVESTMENT, ETC.

(2) CONSIDERED FIXED BECAUSE STAFFING IS VIRTUALLY INDEPENDENT OF THROUGHPUT FOR A GIVEN PLANT.

Table 4-33 MO_2 Plant Project Expenditure Schedule

CASE	DESIGN CAPACITY	YEARS PRIOR TO INITIAL Pu AVAILABILITY							
		8	7	6	5	4	3	2	1	0
		JANUARY 1975 DOLLARS IN MILLIONS							
DISPERSED SITING	500 $MTMO_2$/YR	2	6	8	16	27	38	28	15
5200 MWe ENERGY PARK	50 $MTMO_2$/YR	-	1	3	4	9	12	10	6
26000 MWe ENERGY PARK	250 $MTMO_2$/YR	1	3	6	10	19	26	19	10
5200 MWe Pu B PARK	165 $MTMO_2$/YR	-	3	5	8	15	21	15	8
26000 MWe Pu B PARK	800 $MTMO_2$/YR	3	8	11	20	35	49	37	20

Although the full impact of regulatory constraints will not be known for some time, it is concluded that project costs for a MO_2 fuel fabrication plant of reasonable size (e.g. 300 $MTMO_2$/yr which would utilize the Pu recovered from 1500 MTU/yr of UO_2-only LWR fuel or ~ 900 MTU/yr of UO_2-only plus MO_2 fuel under equilibrium recycle conditions assumed for the energy park study cases) will be ~ \$330,000 per $MTMO_2$/yr in January 1975 dollars which is equivalent to \$2 to \$3 per installed kWe served. For the smallest sized plant called for among the reference energy park study cases (50 $MTMO_2$/yr), project costs per unit of capacity appear to be ~2.5 times as much. For an MO_2 plant capacity matching the largest Pu-burning LWR energy park case considered (26000 MWe loaded with the maximum practical amount of MO_2 fuel), project costs of ~ \$250,000 per $MTMO_2$/yr are indicated by this study. Unit costs for MO_2 fuel rod fabrication and bundle assembly functions in such facilities, including typical capital charges, are concluded to be in the range of \$150 to \$570/kg MO_2 depending on plant throughput.

Subchapter Contents

		Page No.
4.7	WASTE MANAGEMENT	4-195
4.7.1	Introduction	4-195
4.7.1.1	TASK OBJECTIVES	4-195
4.7.1.2	AVAILABLE RESOURCES	4-195
4.7.1.3	KEY ISSUES	4-196
4.7.2	Bases and Assumptions	4-198
4.7.2.1	GENERAL	4-198
4.7.2.2	WASTE CATEGORIES	4-198
4.7.2.3	FUNCTIONAL REQUIREMENTS	4-201
4.7.3	Reference Concepts	4-202
4.7.3.1	GENERAL RELATIONSHIPS	4-202
4.7.3.2	LWR CASES	4-208
4.7.3.3	OTHER-THAN-LWR CASES	4-209
4.7.4	Costs and Schedules	4-209
4.7.4.1	GENERAL RELATIONSHIPS	4-209
4.7.4.2	SPECIFIC COST PROJECTIONS	4-212
4.7.5	Conclusions and Recommendations	4-212

4.7 WASTE MANAGEMENT

4.7.1 Introduction

4.7.1.1 TASK OBJECTIVES. Facility requirements and costs for control and disposal of wastes resulting from nuclear power generation are such as to require consideration in evaluating energy park feasibility and viability. Of particular import are the radioactive materials which are formed during irradiation of nuclear fuel in power reactors and are not recoverable or do not have commercial value commensurate with their cost of recovery. Most of these waste materials are contained in the effluents from fuel reprocessing operations in which materials of value in the irradiated fuel (U and Pu) are separated from the waste fission and transmutation products for return to the fuel cycle. Also, because processes for conversion and recycle of useful products are not completely efficient, waste streams from these operations will contain sufficient nuclear material (e.g. Pu) to require special control and disposal provisions. The quantities of wastes per unit of power generated by nuclear means are very small compared to alternative energy sources but, being radioactive, their potential impact is such that management requirements are not insignificant.

Previous sections of this report have included consideration of facility and operating requirements for collection, treatment and onsite control of radioactive wastes from energy park reactors, fuel reprocessing plants and recycle fuel fabrication plants. This section on waste management deals with interim storage, further treatment and ultimate disposal of these wastes after transfer offsite. The primary objective is to provide such offsite waste management data as may have significant effect on overall study conclusions.

4.7.1.2 AVAILABLE RESOURCES. Because of potential impact on public health and safety, requirements for radioactive waste management in source (licensed) facilities are established by Federal regulations and the facilities required for long term management of wastes from such sources are to be provided by Federal agencies. As noted in previous sections, Federal agency (AEC) waste management regulations, policies and plans have been evolving in parallel with the growth in commercial nuclear power generation and related fuel cycle support activities over recent years. However, an overall waste control and disposal plan which will be acceptable to the public as well as responsive to industry needs is still being developed (now an ERDA function) and final regulatory requirements consistent with such a plan are yet to be established (by NRC).

In projecting future conditions, considerable technical and engi-

neering information related to radioactive waste control and disposal alternatives has been generated from which logical conclusions regarding necessary provisions and associated costs might be derived but Federal agency decision-making procedures and public acceptance requirements are apt to overshadow engineering logic in this case.

In addition to the evolving policy statements and regulations that have been issued, information has been published over the years on Federal agency programs and plans for providing longer term control and ultimate disposition of wastes from commercial nuclear facility operations [21]. Comments on proposed program plans and regulations by industry participants, regional government agencies and other interested groups also are available. The latest information from such sources was utilized as the basis for projecting waste management provisions and requirements in the time period of interest and for characterizing the costs chargeable to nuclear power generation for offsite waste control and disposal functions under the study case conditions.

4.7.1.3 KEY ISSUES. The questions and unresolved issues of particular significance to the objectives of this task all relate to future Federal policies, programs and requirements regarding radioactive waste management. As discussed in Nuclear Fuel Reprocessing, the policy and regulations on high activity level waste disposal (e.g. from reprocessing plant bulk fission product removal operations) currently contained in the Code of Federal Regulations, Chapter 10, Part 50 (19CFR50) do not reflect the approaches now being considered by ERDA for selection, development and implementation. Because of concerns about very long-lived alpha emitters in nuclear plant wastes, the AEC in September 1974 published for comment a proposed amendment to 10CFR20 which would require that all wastes containing or contaminated by transuranium elements be packaged and transferred to the AEC (now ERDA) which then would be responsible for subsequent storage, treatment and disposal functions with costs therefor being passed back to industry. At the same time, a draft "Environmental Statement - Management of Commercial High Level and Transuranium Contaminated Radioactive Waste", WASH-1539 [14], was issued by the AEC (39 FR178, 32929, 9/2/74) and procedures were set up for necessary comments, hearings, etc. to establish industry and public acceptance. This is an important step in defining future waste disposal requirements and costs but, as reflected in the initial comments received from interested groups, the draft statement does not recommend a specific program plan for development and implementation nor are the bases to be used in selecting a plan defined. For example, three different concepts and three different locations are indicated as still being considered for a high level

waste Retrievable Surface Storage Facility (RSSF) felt to be required for interim retention of packaged high level wastes from commercial facilities while ultimate disposal means are being evaluated, selected and implemented.

In regard to ultimate disposition, geologic disposal is indicated to be considered the best long term alternative but, again, a number of candidate formations (e.g. bedded salt, shale, granite) are still under consideration as well as certain more imaginative concepts such as extraterrestial disposal, transmutation and burial in polar ice sheets.

It is also noted in the draft statement that a decision on where and how to store commercially generated transuranic wastes has not been made and that consideration is being given to whether radionuclides other than those covered by the proposed amendment to 10CFR20 should be earmarked for AEC (now ERDA) management. Potential costs for Federal waste management and disposal services will depend on the specific approaches finally selected but are characterized as totalling from $2.5 to $3 billion through the year 2000, to be assessed to the nuclear power industry on a full cost recovery basis. Projections of impact on the various reference cases for the energy park study can be made but there will be significant uncertainties in such projections until resolution can be obtained as to:

Types and Forms of Nuclear Wastes Requiring Transfer to Federal Custody. Lack of complete bases for determining waste segregation and conversion requirements is one of the major problems facing the nuclear industry today. Necessary waste category definitions, form specifications, packaging and transfer requirements, etc. are expected to evolve as detailed waste management program plans acceptable to the public are developed and implemented and as specific nuclear plant process flowsheets and system designs are submitted for regulatory review. The range of possible requirements and constraints has substantial impact on projected quantities of wastes per unit of production to be transferred offsite.

Post-Transfer Storage, Treatment and Disposal Functions for Each Category of Nuclear Wastes. The scope of Federal agency activities on management of wastes after receipt from commercial nuclear facilities probably will have greater effect on power generation costs than the pretransfer segregation, treatment and packaging requirements to meet receiving facility acceptance criteria. Available information on retention and disposal program

plans suggests a number of alternatives which represent a wide range of potential costs to be back-charged to industry but gives little basis for projecting most probable or upper limit conditions.

Methods for Distributing Offsite Waste Management Costs Among Source Facilities. Alternative approaches to investment write-off, operating cost allocation, etc. would have substantial impact on projected offsite waste management service charges for the various study cases even if waste categories requiring transfer to Federal custody were defined and data on management facility requirements and costs were available. No firm information has been published to date on cost allocation methods being considered for application.

4.7.2 Bases and Assumptions

4.7.2.1 GENERAL. The primary assumption made is that the benefits of nuclear power generation will be judged to outweigh potential risks including those associated with long term radioactive waste management. The scenario deemed most likely is one of protracted proceedings for developing a publicly acceptable waste management program plan which will require complete rewrite of the draft environmental statement and will force selection by ERDA of a general reference approach with details to be filled in as the results of programmed work become available. Continued operation of reactors and head end fuel cycle facilities is expected to be permitted under existing regulations supplemented by interim controls and guidelines to permit startup of the AGNS fuel reprocessing plant and issuance of a construction permit for the first production-scale MO_2 fuel factory before complete and consistent policies, programs and regulations are issued. It is assumed that these interim measures will include provisions for extended storage of spent fuel unreprocessed and specification of acceptable intermediate waste forms for protected storage while final treatment, packaging and disposal requirements are being defined.

4.7.2.2 WASTE CATEGORIES

Projections of offsite waste management requirements and costs for the various study cases are based on the following waste categories:

High Level Wastes. As presently defined in 10CFR50, Appendix F, high level wastes are "those aqueous wastes resulting from the operation of the first cycle solvent extraction system, or equivalent, and the concentrated wastes from subsequent extraction cycles, or equivalent, in a facility for reprocessing irradiated reactor fuels".

Definition by source rather than by specified content or activity level is based on the fact that solvent extraction is utilized for bulk fission product separation in virtually all existing and proposed fuel reprocessing plant flowsheets. Although a quantitative specification may evolve, at least for the solid form to be transferred to Federal custody, it is assumed that this general definition will continue to apply so that this most intensely radioactive category of wastes will be from reprocessing plants **only** and will contain $>99.9\%$ of the non-volatile fission products and $\ll 1\%$ of the U and Pu present in the spent fuels as well as essentially all the other actinides formed by transmutation of U and Pu during irradiation. Their intensity of penetrating radiation and their rates of heat generation will be such as to require shielding and cooling during shipment and storage.

As noted in previous sections, there may be specific cases in which spent fuel reprocessing for recovery and recycle of contained fissile uranium and plutonium may not be economically justified, e.g. fuel materials which have gone through multiple irradiation cycles. For such cases, the unreprocessed spent fuel would be considered as a special type of high level waste.

Cladding Wastes. The pieces of stainless steel or zirconium alloy tubing and other fuel rod hardware that remain after dissolution of the fuel core material in reprocessing plant head end systems are a separate category of wastes. Their radioactivity arises mainly from neutron activation of the structural materials during irradiation but even after extended leaching and rinsing they will retain some of the fuel core materials including plutonium so that they are considered as one of the types of transuranium contaminated wastes to be covered by currently proposed regulations (ref 39 FR178, 32921, 9/12/75) and waste management program plans (per WASH 1539). Some other transuranic wastes also may have sufficient penetrating radiation to require biological shielding but cladding wastes are considered as a separate category because of their unique form and handling requirements.

Alpha-Beta-Gamma Wastes. Consolidated non-product effluents, other than high level and cladding wastes, which contain long-lived alpha activities greater than 10 μCi/kg and have penetrating radiation levels sufficient to require biological shielding and remote handling are considered as a separate category of wastes, assumed all to be from fuel reprocessing plant operation.

Alpha-Only Wastes. Non-product materials that contain Pu or other long-lived alpha emitters at concentrations greater than

10 μCi/kg but have external radiation levels low enough that they can be handled without supplementary shielding are categorized as alpha wastes. Such wastes are primarily from Pu conversion and MO_2 fuel fabrication operations and include a wide assortment of contaminated solid materials as well as process effluents.

Beta-Gamma Wastes. These are consolidated alpha-free wastes requiring minimal shielding such as arise from operation of any facility handling radioactive materials.

Other Radioactive Wastes. Because of their unique packaging and disposal requirements, certain other radioactive constituents removed from nuclear plant effluent streams are separately categorized. These wastes materials include:

- Tritium: Neutron reactions with light elements present in LWR primary cooling systems produce H_3 (tritium) which is a soft beta emitter of ~12 year half-life. This isotope also is produced in the fuel by fission and is evolved in subsequent reprocessing operations. Current practice is to control tritium levels in reactor circulating loops and reprocessing plant process water systems by side stream bleed-off and release as tritiated water in liquid or vapor form. Based on expected requirements for reducing offsite releases to levels which are as low as practicable, it may be necessary in future plants to collect these wastes for offsite transfer rather than discharging them directly to the environs.

- Noble Gases: Stable and short-lived isotopes of krypton and xenon are among the fission products formed during fuel irradiation. Some is released to reactor offgas systems from fuel cladding defects but a very high percentage ($>$ 99%) is evolved during reprocessing plant head end operations at which point Kr-85, a soft beta emitter of 10.8 year half-life, is the isotope of principal concern. Systems for hold up of reactor offgas for decay of short-lived species have been developed but Kr-85 is released as it evolves in current reprocessing plant designs. It is expected that removal from offgas streams and offsite transfer as a specific waste type may be required for future plants.

- Iodine: Because of its complex physical and chemical properties, fission product iodine requires specific waste management attention. During reactor operation and fuel reprocessing, the I-131 isotope is a radiation source of particular concern but it decays away fairly rapidly

(~8 day half-life) so that it is the longer-lived (1.6×10^7 yr) I-129 isotope that is of waste management consequence. Most of the iodine is evolved during reprocessing and collected by treatment of the process offgases.

4.7.2.3 FUNCTIONAL REQUIREMENTS. Projected offsite transfer and subsequent management requirements for the major types of wastes having significant impact are as follows:

High Level Wastes. It appears certain that present policies and regulations regarding high level wastes from reprocessing operations will be changed but that transfer to Federal custody for ultimate disposal will continue to be required. For this study, it is assumed that interim measures to permit industry to proceed while an ultimate disposal method is being selected and implemented will include: (1) establishment of a central RSSF of limited capacity for retention of packaged high level wastes from early (dispersed plant) reprocessing operations, (2) specification of acceptable intermediate waste forms for RSSF storage and provision of facilities at the RSSF site for conversion of such wastes to the form selected for final disposal, and (3) qualification of future plant facilities for protected storage of packaged wastes awaiting offsite transfer as being equivalent to the Federal RSSF provisions if certain siting, waste form and packaging requirements expected to evolve in the course of current policy and program development efforts are met. Although there will be incentives for reconcentration of high level wastes after interim storage to minimize the volumes requiring permanent disposal, it is assumed that such further treatment will be precluded by requirements for earlier conversion to low dispersibility form.

Transuranic Wastes. It is very likely that proposed regulations and program plans requiring consolidation, packaging and transfer to Federal custody of all wastes containing or contaminated with long-lived alpha emitters will be applied to plants built and operated in the time period of interest. It is assumed that the suggested limit of 10 μCi/kg will not be relaxed significantly and that authorized facilities will be established for receipt and storage of the very extensive quantities and forms of such wastes resultlng from application of such a low limit.

Alpha-Free Wastes. It is assumed that there will be some nuclear wastes which can be determined with requisite assurance to contain less than 10 μCi/kg alpha activity. It is expected that such wastes will have to be collected and packaged for shipment to appropriate disposal facilities. For certain of the special waste categories requiring protected storage because of their potentially dispersible

form (e.g. noble gases, tritium, iodine), it is assumed that Federal facilities will be provided. Other forms of alpha-free wastes (e.g. from reactor operations) are assumed to be disposable in authorized surface burial grounds.

4.7.3 Reference Concepts

4.7.3.1 GENERAL RELATIONSHIPS. The quantities of radioactive waste materials per unit of production for the reference nuclear facility concepts used in this study are summarized in Table 4-34. Wastes associated with UO_2 only fuel supply (mining, milling, conversion, enrichment, etc.) are not included on the basis that such fuel will be obtained from the same offsite sources for all the cases considered and that long term waste management requirements are much less demanding than for the fuel irradiation, reprocessing and refabrication functions. Significant considerations for each of the waste categories are as follows.

High Level Wastes. In the reference flowsheet, individual waste streams from the various reprocessing plant unit operations are combined and reduced to solid form by concentration and calcination. The treated waste material contains an inert diluent selected to be compatible with subsequent treatment processes (e.g. glassification). Radioactive material content would be based on specific heat generation limits (typically 8 kW/ft^3 initial level) and thus would vary with fuel exposure, decay time, etc. For expected conditions, each metric ton of LWR fuel processed would result in 2 to 3 ft^3 of dry waste mix containing <2 kgU, ~ 10 gm Pu, ~ 6 kg other actinides, ~ 30 kg of fission products and from 80 to 140 kg of non-radioactive process chemicals, inert diluent, etc. Conversion of this waste mix to a form having acceptably low dispersibility (such as high melting point glass pellets) by reference processes would increase the weight but would not have much effect on volume because of the reduced voids in the glassified product. Thus, for a standard waste container design, the number of packages per ton reprocessed would be about the same for offsite transfer as dry calcine or in glassified form.

As noted previously, acceptance criteria for transfer of high level waste to Federal custody are still being developed. Latest information on the status of these developments was provided to industry on 12/5-6/74 at a meeting sponsored by the AEC's Division of Waste Management and Transportation. The information provided was based on transfer to a Sealed Storage Cask Concept (SSCC) repository which is one of the alternatives being considered for the Federal RSSF [14]. No new or useful guidance on waste form criteria was presented. However, fairly specific container design requirements

Table 4-34 Unit Radioactive Waste Generation Rates - Equilibrium LWR Fuel Cycle

		REACTOR OPERATION PER 1000 MW(e)-YR.		FUEL REPROCESSING PER MTU		MO_2 FUEL FAB. PER $MTMO_2$	
CATEGORY	PACKAGED FORM	CU.FT.	NO. PKGS.	CU.FT.	NO. PKGS.	CU.FT.	NO.PKGS
HIGH LEVEL WASTES	SOLIDIFIED MIX			2 - 4	1/10		
CLADDING WASTES	ROLL-FLATTENED			3 - 4	1/10		
ALPHA-BETA-GAMMA WASTES	CONSOLIDATED			10	1/3		
ALPHA-ONLY WASTES	COMPACTED			5	2/3	200	27
BETA-GAMMA WASTES	UNCOMPACTED	3800	77	25	1/2		
OTHER WASTES:							
TRITIUM	INITIATED WATER	460	~ 3	~ 1/9	1/35		
KRYPTON	SORBED	<< 1	<<< 1	~ 3	1/40		
IODINE	STABLE COMPOUND			1/300	1/150		

and constraints were suggested. Although derived for a particular RSSF concept, bases for the dimensional requirements suggested appear to be generally applicable to the handling and transfer operations necessary for receipt and storage at any longer term repository. Indicated limits are 2 ft in maximum lateral dimension and 15 ft overall length, including fittings. A cylindrical steel canister meeting these limits with nominal allowances for wall thickness and freeboard could hold as much as 40 ft^3 of high level waste mix. This is much greater than considered in most previously published studies[22] which generally have been based on more restrictive canister size limits like had been applied to the earlier Lyons salt mine repository studies. For the purposes of the present task, it is projected that all factors considered (heat density and specific activity constraints as well as handling requirements) will permit use of a canister capable of holding the solidified high level waste from reprocessing 10 MTU of LWR fuel, on the average.

For spent fuel disposal without reprocessing, it is likely that some form of compaction would be employed to minimize long term management costs. For example, fuel bundles could be stored for decay of heat generation rate, then disassembled and the separated fuel rods closely packed in canisters similar to those required for reprocessing plant wastes. On consistent bases, each such canister might hold about 2 MTU of LWR fuel. The scrap bundle hardware would be packaged separately for disposal as shown in the reference reprocessing plant flowsheet.

Cladding Waste. For future LWR fuel designs, it appears that there will be somewhat less than 300 kg of Zr alloy cladding per metric ton of U in the core material. The reference reprocessing plants include a bundle disassembly step prior to the chop/leach operation for separation of bundle hardware (end fittings, spacers, etc.) from the fuel rods themselves which would permit disposal of this activated metalic scrap as alpha-free waste. With the reference dissolution process, it is expected that the leached cladding segments from 1 MTU of LWR fuel will contain $<$ 500 gms U, $<$ 5 gms Pu and $<$ 10 gms of fission products as the principal items of long term waste management concern. Volume is on the order of 10 ft^3/MTU as discharged from the leacher (80% voids) but reduction to 0.5 to 0.7 of theoretical density should be obtainable with the compaction step provided.

As for high level wastes, acceptance criteria for transfer of cladding wastes to Federal custody are still being developed. At the industry briefing referenced previously, general specifications and requirements for interim retrievable storage of high-gamma trans-

uranic wastes such as cladding hulls were indicated to be equivalent to those being considered for high level wastes. With the lower heat density and specific activity, maximum practical container capacities are expected to be used. For compaction to 0.7 theoretical density, container size probably would be limited by the maximum billet diameter that could be produced in a suitable press (~ 10 inches). A full length canister of such diameter would contain the cladding from ~3 MTU of LWR fuel. By roll flattening the hulls to ~ 0.5 theoretical density, a canister size near the limit indicated for the Federal repository (2 ft o.d. by 15 ft overall length) might be used which could contain the cladding from as much as 12 MTU of LWR fuel. For this study, a cladding waste canister capacity equivalent to 10 MTU of fuel reprocessed is projected.

Other Alpha-Beta-Gamma Wastes. There are some other reprocessing plant alpha-beta-gamma wastes which may require separate consolidation and packaging because of incompatibility with high level waste treatment and cladding waste handling provisions. Failed process equipment which cannot be completely decontaminated probably will be in this category. It is expected that such wastes would be remotely drummed for transfer and storage in canisters similar to those used for the cladding wastes. At a projected volume of ~10 ft^3/MTU after consolidation, there would be one such canister for each 3 MTU of LWR fuel reprocessed.

Alpha-Only Wastes. MO_2 fuel fabrication operations are expected to generate a wide assortment of plutonium contaminated waste materials requiring transfer to federal custody. These range from liquid effluent treatment residues to failed process equipment and include considerable quantities of combustible materials which have alpha activity greater than 10 μCi/kg but insignificant levels of penetrating radiation. Quantities will be affected by process and operating details to be defined in the future but it appears that on the order of 2000 ft^3 of such wastes will be generated per metric ton of MO_2 fuel rods fabricated. Incineration and compaction have been used for alpha waste consolidation and advanced processes also are receiving development attention. For this study it is projected that the volume requiring transfer to Federal custody will be reduced to about 200 ft^3/MTMO_2. Alpha-only wastes from reprocessing plant operations are expected to total $<$ 10 ft^3/MTU uncompacted and ~ 1 ft^3/MTU as transferred.

As currently considered, specifications and requirements for low-gamma transuranic wastes to be transferred to Federal custody are directed mainly at assuring resistance to handling forces and protection against degradation during retrievable storage for up to 20 years in a warehouse type structure. Appropriately lined and sealed

containers (e.g. 55 gallon drums per DOT Spec 17C, metal packages per DOT Spec 6M or 4 x 4 x 7 ft^3 wooden boxes per DOT Spec 19A) are indicated to be acceptable. Fissile material content limits also are proposed for each such package which do not appear likely to be exceeded with the consolidation factors noted. For this study, it is assumed that the Type 17C container will be used for all alpha-only wastes. (~7.5 ft^3 each.)

Alpha-Free Low Level Wastes. Consolidated beta-gamma wastes not requiring transfer to Federal custody under currently proposed policies and regulations are expected to have to be packaged for removal offsite, at the time of plant decommissioning if not before, rather than the past practices of direct burial, hold-up in liquid form for later release to the environs, etc. Bases for quantifying such wastes are rather sketchy but typical rates would be ~ 5000 ft^3/yr for an LWR of the reference capacity (1300 MWe) and 150 ft^3/MTU from a reference reprocessing plant. As noted previously, it is expected that virtually all process-related wastes from MO_2 fuel fabrication operations will be considered as alpha-contaminated.

Volume reduction prior to loadout and special container designs to minimize disposal charges probably would be economically justified, but for the present task, disposal in various size containers without significant compaction is assumed (average of 50 cu. ft./container taken as representative).

Other Wastes Requiring Packaging and Transfer. Generation rates projected for other nuclear facility wastes requiring special handling are as follows:

- Tritium: If H-3 from reactor operations is to be held for decay rather than released, volume will depend on the concentration permitted in (and bled off from) the reactor systems. It is assumed that future LWRs will use Zr alloy cladding so that migration of fission H-3 into the cooling system will be minimal. For an average generation rate from neutron reactions with light elements in LWR cooling systems on the order of 10 μCi/MWh(e) and an equilibrium concentration of 20,000 μCi/gal, about 16 gallons would have to be bled off each operating day for a 1300 MWe LWR. Large tank storage as tritiated water would appear to present the risk of a major release incident in event of tank failure (greater hazard to the public than continuous release as water vapor, for example). However, it is assumed for the present study that suitably protected containers can be provided for transfer of collected bleed off to an appropriate disposal site in four shipments per year.

For removal of fission H-3 from spent LWR fuel at the head end of the reprocessing plant (before dilution with normal hydrogen as the result of aqueous processing), fixation densities on the order of 500 Ci/liter are potentially achievable. For a projected average content in LWR fuel core material at reprocessing of 600 Ci/MTU, a single large container (e.g. 2 ft o.d. by 7 ft overall length) could contain the tritium evolved from over 450 MTU of LWR fuel. However practical considerations in developing systems for continuous removal and periodic loadout and for balancing fixation density against stability and cost probably will result in lower concentrations (e.g. 200 Ci/liter) and smaller package sizes. For the present study, single containers are projected to accommodate the tritium evolved from 35 MTU of LWR fuel ($\sim 4\ ft^3$) for onsite protected storage and ultimate transfer to designated disposal sites.

Kr-85: Actual quantities of other than short-lived noble gases escaping from leaking fuel during reactor operation are very small. Hold up systems now in general use for larger LWRs provide decay time for short-lived constituents which are then released at activity rates in the 10 to 20 μCi/sec range. Systems being developed for collection of noble gases instead of hold up and release would permit separation of Kr from the other constituents. The quantity of Kr collected from reactor offgases with such systems depends on the extent of fuel leakage permitted without requiring reactor shutdown; the Kr leakage has been projected to be $\sim 0.2\%$ of that formed in the LWR fuel during irradiation, or about 500 to 1000 Ci/year.

For the noble gases evolved during reprocessing, a high percentage of the radioactive Kr-85 in the spent fuel (on the order of 10^4 Ci/MTU) can be removed by treatment of leacher offgases as included in the reference plant flowsheet. About 3 scf of Kr gas would be collected per MTU of LWR fuel reprocessed. Standard gas cylinders at high pressure could be used for maximum storage density but the potential for significant release in event of failure may require that pressure be limited to well below design (e.g. ~ 600 psig in a vessel rated for 2200 psig service) or that the gas be loaded on an adsorber in a container to reduce mobility. For the present study, the latter approach is assumed to be taken. Large cylinders ($\sim 25\ ft^3$) filled with charcoal would contain >120 scf of Kr gas which would be that evolved from 40 MTU or so of LWR fuel reprocessed, and more than that collected during the

operating life of a 1300 MWe LWR.

- Iodine: The quantities of fission product iodine formed in an LWR during irradiation are relatively small, being less than 250 gms/MTU for maximum exposure fuel. Processes capable of removing >99.9% of that contained in the spent fuel and retaining it in stable compound form are expected to be available for application to future reprocessing plants. For the reference plant concept, this waste material would be collected in removable units of convenient size which would serve as the primary container for onsite storage and transfer to designated disposal sites. Densities up to 75 kg of iodine per cubic foot of container volume appear to be attainable. On this basis it is projected that a single container of modest size would accommodate the iodine wastes from 150 MTU of LWR fuel reprocessed.

4.7.3.2 LWR CASES. Based on the equilibrium fuel cycle data summarized in Table 4-10, quantities of radioactive wastes produced annually for selected Pu recycle cases are as follows:

MW(e) Installed	5200	17300	26000	86500
MTU/yr Reprocessed	146	484	728	2422
$MTMO_2$/yr Fabricated	50	166	248	828

Wastes	cu. ft.	lb	cu.ft.	lb	cu.ft.	lb	cu. ft.	lb
High Level	440	15	1450	49	2180	73	7270	243
Cladding	500	15	1650	49	2500	73	8300	243
Alpha-Beta-Gamma	1460	49	4840	161	7280	242	24220	808
Alpha-only	10730	1430	35700	4750	53240	7110	177700	23700
Beta-Gamma	23650	473	78600	1570	118200	2360	392500	7850
Tritium	2410	20	8020	67	12080	100	40270	333
Krypton	440	4	1450	12	2180	19	730	61
Iodine	1/2	1	1 to 2	4	2 to 3	5	8	16

Annual quantities of radioactive wastes for the open cycle and excess Pu recovery cases can be similarly derived from the unit generation rates in Table 4-34. If disposal of spent fuel without recovery and recycle were to be considered, there annually would be about 600 cu. ft. of this special type of high level waste in about 20 packages plus about 200 cu. ft of beta-gamma waste in about 4 packages for each 1300 MWe of installed LWR capacity. Although all these projections are inexact because of the many assumptions necessary, it is apparent that management of the various alpha-free wastes from reactor and reprocessing plant operation and the alpha-only wastes from MO_2 fuel fabrication are of major logistic significance.

4.7.3.3 OTHER THAN LWR CASES. Based on current reactor design concepts and the flowsheets being developed for supporting fuel reprocessing and recovered product recycle facilities, the annual waste outputs per 1000 MWe of HTGR and LMFBR installed capacity are projected to be roughly as follows:

	HTGR		LMFBR	
Wastes	cu. ft.	No. pkgs.	cu. ft.	No. pkgs.
High Level	50	1.7	60	2
Cladding	-	-	170	5
Alpha-Beta-Gamma	300	10	1200	40
Alpha	2000	270	3000	40
Beta-Gamma	8000	160	4500	90
Other	100	2	100	2

4.7.4 Costs and Schedules

4.7.4.1 GENERAL RELATIONSHIPS. As noted previously, information on which to base projections of future charges for offsite waste management services is not at all firm. The best that can be done is to characterize expected costs for the handling and disposal methods deemed most likely to apply in the time period of interest and to project charges on the basis of representative cost allocation procedures, as summarized below.

High Level Wastes. Principal activities for which costs are projected under this task include acceptance of packaged high level wastes from source reprocessing plants; retention in a Retrievable Surface Storage Facility for on the order of 20 years; further treatment and/or repackaging for final disposal; transfer to the final disposal site; and final disposal.

The costs for consolidation and conversion to forms meeting acceptance criteria for transfer to Federal custody including those for primary (non-reusable) waste containers, are covered under reprocessing. The costs for shipment of the packaged wastes from source reprocessing plants to the point of Federal acceptance, including those for shielded shipping casks, are covered under transportation (section 4.8).

For the present study it is assumed that ERDA will charge a "one time" fee sized to include allowances for longer term waste management activities which may not be fully defined at the time of waste acceptance, as well as to offset immediate waste receipt and retrievable storage costs which should be fairly well established.

With this approach, the portion of the fee in excess of near term costs would be paid into an endowment fund, the income from which would be used to cover future costs for retrieval, further treatment (if required) and final disposal by whatever method is ultimately selected. Title to the waste would pass to ERDA at the time of delivery (or on payment of the fee).

Most recent studies in support of the AEC/ERDA waste management program projected a one-time fee of somewhat over $31,000/canister to cover retrievable storage in an RSSF of the sealed storage cask concept for 20-plus years and ultimate transfer to a final disposal site.

The total costs on which this projection is based were calculated to have a present value in excess of $1 billion. Over 90% of the total is for near term facilities and operations of which a major element is the cost of the massive steel and concrete overpack units required for each waste canister stored (probably on the order of $10,000 for materials and fabrication in large lots). RSSF operating costs for cask receiving and unloading, canister inspection and placement in its overpack (not including allowance for corrective action in the event that acceptance specifications in regard to surface contamination, etc. are not met) and surveillance during storage are expected to be in the $2 to 3 million/year range, depending on facility capacity and waste receiving rate.

For the canister capacity assumed in the ERDA study (~ 7 ft^3), the portion of the operating costs assignable to an individual canister for receiving and 20-plus years storage would be about $4000, again depending on facility capacity and utilization schedule. The amount of the fee indicated to be for subsequent waste retrieval, shipment (including necessary transport equipment) and final disposal appears to be optimistic in view of current uncertainties in regard to what will be considered acceptable to all interested parties.

For the large container capacity assumed in the present task and including a general allowance for rework or other such additional requirement, it is projected that charges to reprocessors in the time period of interest for offsite services and functions related to high level waste management will total $50,000 per canister in current dollars which is equivalent to $5000/MTU of LWR fuel reprocessed or an annual cost of about $200,000 for a 1300 MWe LWR in equilibrium operation.

In regard to schedule, high level waste from operation of a given reactor would begin to be transferred to Federal custody about 12 years

after startup assuming availability of reprocessing capability as soon as initially discharged fuel had decayed sufficiently. For the reference energy park cases, charges for offsite waste management would begin 10 years after reprocessing plant startup (Section 4.5.4.3) and continue at a uniform annual rate thereafter.

If disposal of spent fuel unreprocessed is considered, a one-time charge of about $46,000/canister or $23,000/MTU of LWR fuel appears to be consistent with the fee cited above for reprocessing plant high level waste disposal. Annual costs then would be about $800,000 for a 1300 MWe LWR in equilibrium operation.

Cladding Wastes. Compacted and packaged fuel cladding wastes will require transfer, retrievable storage and final disposal much the same as for high level wastes. Shielding and cooling requirements are less so that storage facility costs could be lower. However, based on most recent information from ERDA, radiation levels for such wastes would exceed the limits being considered for general alpha-beta-gamma waste storage facilities, and thus RSSF storage would be required. For the present task, it is projected that a one-time charge of $30,000/container will adequately cover offsite waste management costs for cladding wastes. Based on assumed container capacity, this is equivalent to $3000/MTU of LWR fuel reprocessed or an annual cost of $110,000 for a 1300 MWe LWR in equilibrium operation. Transfer to Federal custody would begin about 5 years after reprocessing plant startup and continue at a uniform annual rate thereafter.

Other Transuranic Wastes Emitting Penetrating Radiation. Offsite waste management charges for packaged alpha-beta-gamma wastes which can be stored in warehouse type facilities are expected to be relatively low on a per-container or per-volume bases. Most recent information indicates that the one-time acceptance fee would include a retrievable storage component of $3.50/cu.ft. of storage space occupied and a perpetual core component of $21/cu.ft., as for alpha-only waste, plus a $200/package surcharge for shielded handling. It is assumed that these are adequately representative for the present task. For the generation rates and container capacities set forth in 4.7.3.1, a charge of $1200/container is projected which is equivalent to $400/MTU of LWR fuel processed or an annual cost of about $15,000 for a 1300 MWe LWR in equilibrium operation. Again, transfer to Federal custody would begin about 5 years after reprocessing plant startup and is assumed to continue at a uniform rate thereafter.

Alpha-Free Low Level Wastes. Disposal costs for packaged low-level wastes not contaminated with long-lived alpha emitters will vary

among the many forms included in this general category and will be affected by future trends in regulatory constraints and business considerations related to commercial surface burial facility operations. At the present time, charges range from $20 to 30/cu. ft. for containerized miscellaneous materials (protective paper, wipe rags, scrapped equipment, etc.) to factors lower for bulk materials such as loaded filter/ion exchange media, etc. For this study $25/cu. ft. is taken as a generally representative cost to source facilities in the future. On this basis, disposal costs for all such wastes (not including transportation) would be about $150,000/yr of 1300 MWe LWR equilibrium operation.

Other Waste Categories. It is expected that special provisions will have to be made for protected retention of packaged radioactive constituents collected from nuclear plant effluent treatment such as Kr-85 and tritium. Firm bases for projecting the cost of such storage are not available but if one-time charge of $1000/container is assumed to be reasonably consistent with the disposal costs used in the present study for other types of wastes, the contribution to overall generation costs is not very significant ($<$ $10,000/yr/1300 MWe LWR).

4.7.4.2 SPECIFIC COST PROJECTIONS. Offsite waste management costs associated with the various study cases are summarized in Table 4-35. Those for the comparative dispersed site case are derived directly from the general cost relationships given in 4.7.4.1. For the energy park cases, costs associated with retrievable storage while awaiting implementation of Federal final disposal provisions were adjusted to reflect the assumption that onsite park waste storage facilities will be considered acceptable for this function. The major cost impact from this assumption is in reduced shipping charges as discussed in Section 4.8.

If disposal of fuel unreprocessed is considered for the small energy park case, annual offsite waste management charges are projected to total about $4,500,000 (not including transportation) of which almost 90% would be in one-time fees for packaged fuel rod disposal.

4.7.5 Conclusions and Recommendations.

Projected trends in regulatory requirements will result in costs for long term management of radioactive waste materials formed during irradiation of nuclear fuel in power reactors which are substantially higher than have been projected on the basis of regulations as presently published. For the segregation, retention and disposal requirements assumed for this study, charges for offsite waste management services would be on the order of $600 per MWe-year of net

Table 4-35 Waste Management Annual Charges for LWR Study Cases

WASTE	JAN. 1975 DOLLARS IN THOUSANDS PER YEAR OF EQUILIBRIUM OPERATION			
	5200 MWe	17300 MWe	26000 MWe	86500 MWe
HIGH LEVEL	750	2450	3650	12,150
CLADDING	450	1470	2190	7,300
ALPHA-BETA-GAMMA	60	195	290	970
ALPHA-ONLY	430	1425	2140	6,750
BETA-GAMMA	590	1960	2950	9,800
OTHER	20	80	120	410
TOTALS	2300	7580	11,340	37,380

output. There are significant uncertainties in the cost projections because of the range of potential requirements still receiving active consideration. For example, more restrictive limits on high level waste container capacity could triple retention and disposal costs resulting in overall waste management charges of over $1000/MWe-yr. However, upper limit costs are still a small fraction of overall power generation costs so that these uncertainties do not have significant impact on the evaluation of energy park feasibility and viability.

In regard to high level wastes from fuel reprocessing, full recovery of costs associated with proposed requirements for construction and operation of a Retrievable Surface Storage Facility is the major contributor to the higher management costs now projected. For example, $2000 to $3000/MTU of LWR fuel reprocessed was indicated in WASH-1099 [1] for direct transfer of calcined waste to a salt mine repository whereas $15,000/MTU is projected in WASH-1327 [12] for interim storage and final disposal. Even with the larger canister volume assumed in the present study to be practical for the RSSF concept on which current ERDA estimates are based, that portion of the one-time disposal fee covering interim retention is equivalent to more than $4000/MTU not including waste fixation, packaging and transport from the reprocessing plant to the RSSF. Reprocessing plants will need storage facilities of comparable integrity for 5 to 10 years retention of wastes awaiting transfer to the RSSF. Provision of enough more capacity to store these wastes until final disposal means are available (approximately 30 years for the schedule assumptions on which present RSSF program plans are based) appears feasible. Additional plant investment would be required but incremental costs could be less than for design and construction of a single large facility. Also, the cost and risk exposure of the additional handling and shipping operations would be avoided.

Application of the proposed policy on commercial transuranium-contaminated wastes will increase offsite retention and disposal costs by an order of magnitude relative to direct burial. Waste segregation, treatment and compaction provisions to minimize management costs may be developed but charges for all such wastes are expected to total more than twice those for the high level wastes.

If most process effluents must be considered potentially contaminated with plutonium, there will be smaller quantities of alpha-free wastes from reprocessing and refabrication operations. However, alpha-free wastes from reactor cooling system cleanup and contamination control activities will continue to contribute significantly to overall waste management costs.

Use of integrated waste conversion, packaging and onsite storage systems for colocated facilities will permit some reductions in management costs but not enough to affect these study conclusions.

Subchapter Contents

		Page No.
4.8	NUCLEAR FUEL AND WASTE TRANSPORTATION	4-217
4.8.1	Introduction	4-217
4.8.1.1	TASK OBJECTIVES	4-217
4.8.1.2	AVAILABLE RESOURCES	4-218
4.8.1.3	KEY ISSUES	4-218
4.8.2	Bases and Assumptions	4-220
4.8.2.1	GENERAL	4-220
4.8.2.2	MATERIALS REQUIRING TRANSPORT	4-220
4.8.2.3	TRANSPORT ASSUMPTIONS	4-220
4.8.3	Reference Concepts	4-226
4.8.3.1	DISPERSED SITES CASE	4-226
4.8.3.2	5200 MWe ENERGY PARK CASE	4-229
4.8.3.3	26,000 MWe ENERGY PARK CASE	4-230
4.8.3.4	26,000 MWe PuB CASE	4-231
4.8.4	Transportation Costs	4-232
4.8.5	Conclusions and Recommendations	4-233

4.8 NUCLEAR FUEL AND WASTE TRANSPORTATION

4.8.1 Introduction

4.8.1.1 TASK OBJECTIVES. Operation of power reactor stations and their necessary support facilities involves materials transport activities which can affect fuel cycle logistics and economics because of unique requirements in regard to shipping containers, transport vehicles, carrier operations and procedural controls. For LWR station operation, these activities can be listed by point of origin as follows:

From Enrichment Plants	• Enriched UF_6 to UO_2 fuel fabrication plants
From UO_2 Fuel Fabrication Plants	• Fabricated UO_2 fuel assemblies to reactor stations
	• Fabricated UO_2 fuel rods and bulk UO_2 powder to MO_2 fuel fabrication plants
	• Packaged low level wastes to commercial or Federal disposal facilities
From Reactor Stations	• Irradiated fuel to reprocessing plants or to unreprocessed fuel storage facilities
	• Packaged radioactive (alpha-free) wastes to commercial or Federal disposal facilities
From Reprocessing Plants	• Recovered Pu to MO_2 fuel fabrication plants
	• Recovered uranium, as UF_6, to fuel fabrication plants and/or to enrichment plants
	• Packaged high level wastes to Federal retrievable surface storage facility (RSSF) and, ultimately, from the RSSF to a final disposal point

- Packaged transuranic wastes to Federal disposal facilities
- Packaged alpha-free wastes to commercial or Federal disposal facilities

From MO_2 Fuel Fabrication Plants

- Fabricated MO_2 fuel assemblies to reactor stations
- Packaged transuranic wastes to Federal disposal facilities

The primary purpose of this task is to provide such data on these transport activities as may be of significance to the evaluation of energy park feasibility and viability.

4.8.1.2 AVAILABLE RESOURCES. Quantities and forms of fuel supply materials requiring transport have been calculated for the reference study cases (Table 4-11). Volumes and numbers of packages of waste materials requiring transport also have been projected on the basis of study assumptions in Section 4.7.3.2, Waste Management.

In regard to shipping costs, data are available on which to base estimates for UF_6 and unirradiated UO_2 fuel assembly transport. There has been some shipment of irradiated fuel on a commercial basis but experience is largely limited to single-element truck casks, whereas large volume transport will require use of multi-element casks near the maximum capacity permitted. Aside from classified movements of weapons grade material, Pu shipments in bulk or as fabricated components have been in limited quantities and under conditions that would not be practical or acceptable for large volume commercial transport. There has been considerable experience in shipment of low level wastes, particularly those from LWR operations, but none for high level or transuranic wastes as defined in current and proposed regulations. In these latter areas, published and internal study results were utilized to develop representative costs for transport equipment and operations as input to the evaluation of alternative study cases.

4.8.1.3 KEY ISSUES. Points of particular significance to the present task are indicated to include:

Safeguard and Physical Protection Requirements. Vulnerability of nuclear materials to loss of control during transport is of general concern. Because of its strategic significance, potential for diversion or dispersion of Pu is receiving particular regulatory and public attention. A wide range of potential provisions for protecting against such events are under consideration, all of which would affect facility requirements and costs for transport of bulk Pu and, possibly, fabricated Pu-bearing components as well. Future requirements for protection of other shipped materials such as spent fuel and radioactive wastes against accidental or deliberate dispersion also are not fully defined and may affect transport facility requirements and costs. The scope of radioactive and fissionable material shipments between sites varies among the alternative study cases. Therefore, the safeguards and physical protection requirements projected to apply in the time period of interest may affect overall study conclusions.

Quantities and Characteristics of Wastes Requiring Transport. There is a wide range of possibilities under consideration in regard to waste segregation, shipping form and packaging requirements as well as to disposal facility location, limits on container size and contained activity, etc. One or two more iterations in the development of policies and programs which are acceptable to the public and the industry will be necessary before firm bases are available from which to project waste transport requirements and associated costs.

Actual Location of Key Facilities. To evaluate the impact of special material transport requirements on energy park viability, it is necessary to consider the distances over which shipments must be made. Specific sites for all of the various points of origin and destinations have not been established. From the general information available, it is apparent that transport distances can vary substantially among the possible locations. Thus there will be significant uncertainties as to the scope and cost of special materials transport equipment and operations which may affect study conclusions regarding the relative merits of alternative study cases. Location of Federal facilities for acceptance of commercial wastes is of particular importance because all sites indicated to be under consideration are remote from expected nuclear power generation centers. Development of waste management programs to the point of site selection for such facilities is required for firm projections to be made.

Carrier Rates. In anticipation of a growing volume of nuclear material shipments, carriers have expressed concern as to the adequacy of present container integrity criteria, control and inspection procedures, emergency response plans, etc. It is likely that acceptable safety assurance provisions ultimately will be developed but what they will be cannot be predicted with certainty at this time. The potential effect is illustrated by the fact that application of special handling requirements now being advocated would roughly double the cost of spent fuel shipping relative to common carrier rates.

4.8.2 Bases and Assumptions

4.8.2.1 GENERAL. Projections of transportation activities and costs are based on material preparation and loadout, including any non-reusable containers that may be required, being covered under source facility operation.

4.8.2.2 MATERIALS REQUIRING TRANSPORT. The quantities and number of packages to be transported under the various study cases are summarized later in Sections 4.8.3.1 through 4.8.3.4.

4.8.2.3 TRANSPORT ASSUMPTIONS.

Feed and Recycle UF_6. In regard to transport of low enrichment or depleted UF_6, it is assumed that:

- Present practice will be followed in the use of standard cylinders in DOT (U. S. Dept. of Transportation) approved packages without special handling or safeguards procedural requirements.

- 10 MTU/shipment, by truck, at a gross weight of 37,000 lbs loaded and 12,700 lbs empty will be feasible. Most shipments to date have been made by individual packages containing about 2 MTU (8000 lbs loaded and 3140 lbs empty) with 5 packages per truck load. Larger sized units have been developed and are expected to be the industry standard in the time period of interest. However, truck load limits are not apt to be increased significantly.

- Current ton-mile rates and turn around times generally will apply.

UO_2 Fuel Assemblies. For shipment of unirradiated UO_2-only fuel bundle assemblies, it is assumed that:

- Present practice of shipment as completed units in protective packaging without special handling or safeguards requirements will be followed (Figure 4-54).

- Truck transport will be used at about 10 MTU/shipment, projected from present practice.

- Current rates for such transport will apply.

UO_2 Powder. For shipping fuel grade UO_2 powder of low enrichment, it is assumed that present industry practice will continue without significant modification.

Irradiated Fuel Assemblies. For transport of fuel discharged from LWR plants, it is assumed that:

- Multi-element casks designed to current NRC/DOT requirements for shielding, cooling, resistance to impact and fire conditions, etc., will be representative.

- Large rail casks (e.g. capacity of 7 MTU LWR fuel at a gross weight of 110 tons) will be in general use (Figure 4-55). Intermodal (truck/rail) or truck casks of lower payload to gross weight ratio will have to be used to serve older reactor sites not having direct rail access or provisions for handling maximum weight casks. However, all future power reactors are expected to have necessary access and handling provisions.

- Special train service will be required for loaded cask movement but not for return of empty casks.

Bulk Pu Product. For all the study cases it is assumed that colocation of spent fuel reprocessing and recycle fuel fabrication plants will be required so that there will be no bulk shipments of recovered Pu in separated or readily separable form.

MO_2 Fuel Assemblies. In regard to unirradiated fuel assemblies containing Pu, it is assumed that shipment of completed units from MO_2 fuel fabrication plants to LWR stations at separated

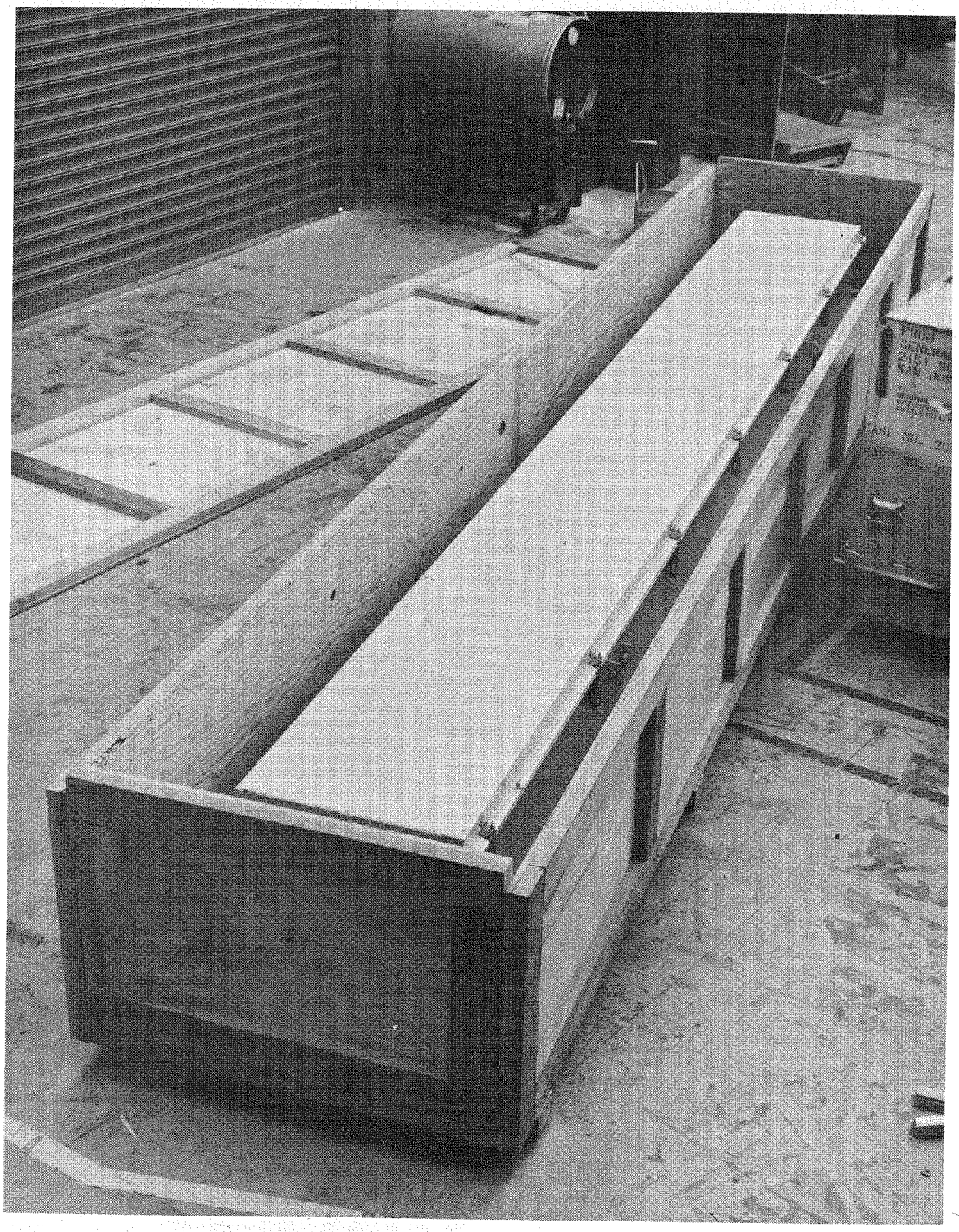

Figure 4-54 Unirradiated UO_2 Fuel Shipping Container

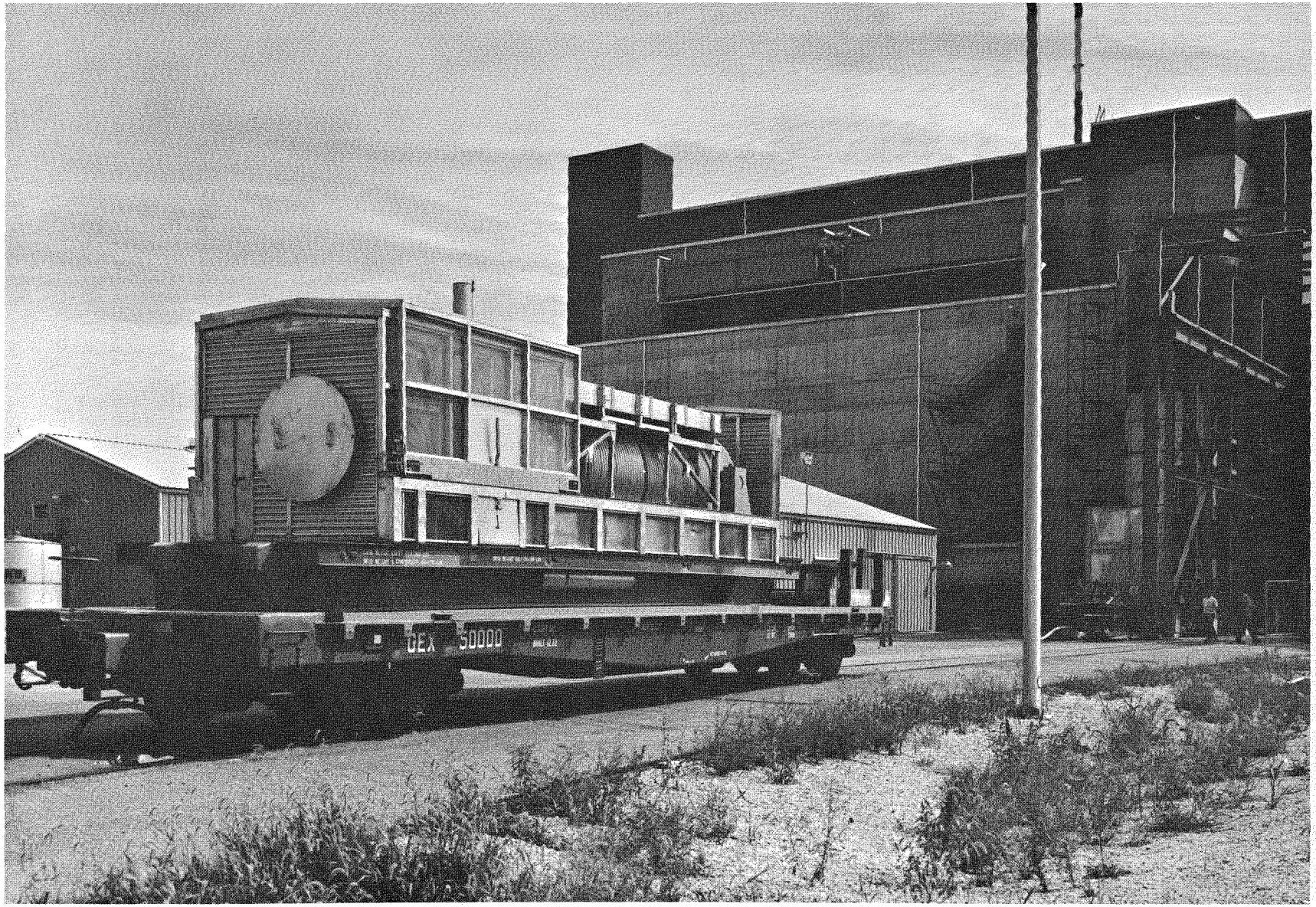

Figure 4-55 IF-300 Irradiated Fuel Shipping Container (MFRP in background)

sites will be permitted but that concerns about diversion and dispersion will result in limits on quantities per shipment, special packaging requirements, special transport vehicle designs, controlled movement under armed guard, etc. Projections of associated costs for the various study cases are to include general allowances for such constraints.

High Level Wastes (HLW). For transport of packaged reprocessing plant high level wastes, it is assumed that:

- Use will be made of cask/rail car units meeting spent fuel cask performance criteria but design specifically for HLW transport in regard to cavity size, etc.

- Casks capable of containing high level wastes from reprocessing 30 MTU of LWR fuel will be feasible.

- Special train service will be required for loaded cask movement but not for empty return.

- Where wastes are transferrred to Federal custody at an interim storage site (RSSF), costs for subsequent shipment to the final disposal point will be included in the one-time fee charged when custody (and title) is transferred.

Transuranic Wastes. For transport of wastes containing or contaminated with long-lived alpha emitters, it is assumed that:

- Primary containers will be shipped in reusable outer packages similar to spent fuel casks in regard to accident resistance but with significant shielding required only for those wastes from reprocessing operations which may also contain appreciable amounts of fission products or activated materials (e.g. cladding hulls).

- Multiple container shipping packages of maximum practical capacity will be used, e.g. volumes per shipment of up to 100 ft^3 for cladding wastes (by rail), 120 ft^3 of other alpha-beta-gamma wastes (truck), and 500 to 1000 ft^3 of alpha-only wastes (truck or rail).

- If a second transfer is required after delivery to a Federal storage facility is required, costs therefore will be included in the one-time disposal fee.

Alpha-Free Wastes. For transport of beta-gamma wastes from reactor fuel fabrication and reprocessing operations, it is assumed that:

- Present packaging and shipping procedures will continue to apply.

- Shipments will be made in near-maximum practical quantities, e.g. up to 150 ft^3 each for wastes requiring significant biological shielding (scrapped reactor internals, fuel bundle hardware, etc.) and/or confinement (recovered Kr-85), and up to 500 ft^3 each for lower level wastes.

4.8.3 Reference Concepts

Special material transport requirements per year of 1000 MWe LWR power station operation, based on representative conditions for recycling self-generated Pu as derived in this study, are summarized in Table 4-36. In regard to distances over which shipments must be made, general ranges can be developed but, as noted earlier, specific projections are subject to considerable uncertainty until location of key facilities has been established. For the purposes of this study, present locations of UF_6 enrichment and UO_2 fuel fabrication facilities are taken as representative. From among the alternative sites being considered, location of Federal waste facilities at Richland, Washington appears to be a logical choice although this results in near-maximum transport distances from representative points of origin. On these bases, transport requirements for the reference cases would be as described below.

4.8.3.1 DISPERSED SITES CASE. Because of the low payload to gross weight ratio for even the largest casks and because of the special handling requirements likely to be imposed, costs per mile for spent fuel transport are high so that the distance from reactors to fuel reprocessing facilities has significant impact on fuel cycle economics. On this basis, it is expected that future reprocessing plants (and colocated MO_2 fabrication facilities) will be sited in regions of relatively high nuclear power generation density even if not in parks. From projected growth patterns, it appears that

Table 4-36 Annual Special Material Transport Requirements per 1000 MWe LWR Capacity with Pu Recycle.

MATERIAL	QUANTITY	SHIPMENTS
UF_6 (ENRICHED AND DEPLETED)	56 MTU	6
UO_2 FUEL	18 MTU	2
UO_2 POWDER (FOR MO_2 FUEL FAB.)	9.5 MTU	1
RECOVERED Pu (FOR MO_2 FUEL FAB.)	0.5 MT Pu (tot)	*
MO_2 FUEL RODS	10 MT HM**	1 to 2
IRRADIATED FUEL	28 MT HM	4
WASTES		
HIGH LEVEL	84 CU. FT.	1
CLADDING	96 CU. FT.	1
ALPHA-BETA-GAMMA	280 CU. FT.	1 to 2
ALPHA-ONLY	2020 CU. FT.	2 to 3
BETA-GAMMA	4540 CU. FT.	10
OTHER	550 CU. FT.	3 to 4

* WITH COLOCATION OF REPROCESSING AND RECYCLE, NO OFFSITE SHIPMENT NEEDED.

** MT HM = METRIC TONNE (1000 kg) HEAVY METAL (U,Pu,Th)

an average spent fuel (and recycle fuel) shipping distance of about 600 miles would be typical for a 1500 MTU/yr reprocessing plant in the time period of interest if allowance is made for the fact that a given plant will offer recovery/recycle services to all potential customers and that some contracts for reprocessing fuel from more remote reactors will result. For reprocessing/refabrication plants so located, distances of 500 miles for shipment of recovered UF_6 to enrichment facilities and 600 miles for shipment of non-Pu feed materials from the UO_2 fuel fabricator to the MO_2 plant appear to be representative. On consistent bases, the shipping distance from the UO_2 fuel fabricator to reactors served would average about 700 miles.

In regard to waste transport, an average shipping distance of about 2200 miles is indicated for those requiring transfer to Federal custody if a single retention site were to be established at Richland, Washington. For low level wastes not requiring such transfer, an average distance of 200 miles is taken as representative.

Based on these distances and the quantities of special nuclear materials to be shipped as established for the reference cases, annual transportation requirements for a dispersed site power generation equivalent to 1500 MTHM of LWR fuel reprocessed under equilibrium Pu recycle conditions are as follows:

Material	Quantity	Shipments	Shipments x Miles
UF_6 (Enriched & Depleted)	2900 MTU	290	140,000
UO_2 Fuel	1050 MTU	105	74,000
UO_2 Powder	420 MTU	42	25,000
MO_2 Fuel	450 MTHM	100	60,000
Irradiated Fuel	1500 MTHM	300	180,000
Wastes:			
High Level	4500 cu ft	50	110,000
Cladding	5100 cu ft	50	110,000
Alpha-Beta-Gamma	15,000 cu ft	75	165,000
Alpha-only	107,000 cu ft	150	330,000
Beta-Gamma	240,000 cu ft	480	96,000
Other to Federal custody	30,000 cu ft	150	330,000

4.8.3.2 5200 MWE ENERGY PARK CASE. For an energy park provided with facilities for reprocessing all of the fuel discharged from onsite reactors and utilizing all of the recovered Pu in fabrication of MO_2 fuel for onsite use, discharged and recycle fuel handling requirements are independent of facility location. More definitive siting criteria are expected to evolve, particularly for multiple unit installations, but they are not likely to greatly restrict the location of "mini-parks" such as the 5200 MWe reference case. On this basis, location in a region of significant energy demand is projected as for the dispersed siting case with the same distances from enrichment, UO_2 fuel fabricator and waste acceptance facilities taken as representative for the present task. Annual transportation requirements, including allowance for some fuel not reaching goal exposure, would be as follows:

Material	Quantities	Shipments	Shipments x Miles
UF_6 (Enriched & Depleted)	280 MTU	28	14,000
UO_2 Fuel	102 MTU	10	7,000
UO_2 Powder	41 MTU	5	3,000
MO_2 Fuel	44 MTHM	*	0
Irradiated Fuel	146 MTHM	*	0
Wastes:			
High Level	440 cu ft	5	11,000
Cladding	500 cu ft	5	11,000
Alpha-Beta-Gamma	1460 cu ft	7	15,000
Alpha-only	10,730 cu ft	15	33,000
Beta-Gamma	24,000 cu ft	48	10,000
Other to Federal Custody	2100 cu ft	15	33,000

* Transfers within the site rather than inter-site transport.

4.8.3.3 26,000 MWE ENERGY PARK CASE. Criteria for siting energy parks of this size are likely to be more restrictive than for dispersed facilities or smaller size parks. These may include requirements for greater separation from major population centers and, presumably, main line rail and road systems. In the absence of information from current studies on multi-facility sites, a 100 mile addition to the small park shipping distances is taken as representative for this case. Annual transportation requirements then would be as follows:

Material	Quantities	Shipments	Shipments x Miles
UF_6 (Enriched & Depleted)	1400 MTU	140	77,000
UO_2 Fuel	510 MTU	51	41,000
UO_2 Powder	203 MTU	20	14,000
MO_2 Fuel	218 MTHM	*	0
Irradiated Fuel	728 MTHM	*	0
Wastes:			
High Level	2180 cu ft	25	59,000
Cladding	2500 cu ft	25	57,000
Alpha-Beta-Gamma	7280 cu ft	36	83,000
Alpha-Only	53240 cu ft	90	210,000
Beta-Gamma	118,200 cu ft	**	0
Other to Federal Custody	14260 cu ft	90	210,000

* Transfer within the site only

** Based on authorized disposal facilities being provided in close proximity to large park installations.

4.8.3.4 26,000 MWE PuB CASE. As discussed in Section 4.4.4.2, projected nuclear power growth patterns indicate that PuB parks could be located such that shipping distances for spent fuel from non-park reactors could be held to under 300 miles in existing powersheds which typically total about 20,000 MWe. For this reference case, however, over 60,000 MWe of offsite LWR capacity would be served so that an average shipping distance for all fuel reprocessed (including that from onsite reactors) might be on the order of 400 miles. Average shipping distance from the UO_2 fabricator to the offsite reactors for this case is taken as 700 miles. Annual transportation requirements then would be as follows:

Material	Quantities	Shipments	Shipments x Miles
UF_6 (Enriched & Depleted)	4650 MTU	465	256,000
UO_2 Fuel	1694 MTU	170	119,000
UO_2 Powder	676 MTU	68	48,000
MO_2 Fuel	728 MTHM	*	0
Irradiated Fuel	2422 MTHM	346	138,000
Wastes:			
High Level	7270 cu ft	81	186,000
Cladding	8300 cu ft	81	186,000
Alpha-Beta-Gamma	24220 cu ft	120	276,000
Alpha-only	177,700 cu ft	300	690,000
Beta-Gamma	392,500	**	0
Other Wastes to Federal Custody	41000 cu ft	300	690,000

* Transfers within the site only

** Based on authorized disposal facilities being provided in close proximity to large park installations.

4.8.4 Transportation Costs.

Based on available information regarding shipping package designs, transit and turnaround times, carrier rates and special handling charges, etc., typical unit transportation costs under the conditions assumed for this task were developed as summarized below. Allowances are included for depreciation and for return of empty shipping containers, where applicable. Cited costs are averages for the range of one way shipping distances assumed for each type of shipment in the reference study cases.

Material	Bases	Dollars per Shipment Mile
UF_6	Standard cylinders in protective packages (DOT 4909) by truck	2.5
UO_2 Fuel	Completed units in protective packaging by truck	3.0
UO_2 Powder	Standard drums by truck	2.5
MO_2 Fuel	Completed units in special packaging by guarded truck	5.0
Spent Fuel	Multi-element shielded cask, intermodal or all-rail with special train service one-way only.	64.0 (all rail) to 48.0 (truck/rail)
Wastes:		
High Level	Multi-canister shielded cask, by rail, special train service one way.	40.0
Cladding	Multi-canister shielded cask, by rail.	30.0
Alpha-Beta-Gamma	Multi-package lightly shielded container, by truck.	10.0
Alpha-only	Standard drums by rail or truck	5.0
Beta-Gamma	Standard packages by truck	0.5
Other	Various packages, shielded and shielded if required, by truck.	2.0

Using these average costs per shipment-mile, the contribution of special material transportation requirements to the annual operating costs for selected study cases is as follows:

	Jan. 1975 Dollars in Millions			
	Dispersed Siting Case	5200 MWe Energy Park	26000 MWe Energy Park	26000 MWe PuB Park
UF_6	0.35	0.04	0.19	0.64
UO_2 Fuel	0.22	0.02	0.12	0.36
UO_2 Powder	0.06	0.01	0.03	0.11
MO_2 Fuel	0.30	0	0	0
Spent Fuel	10.00	0	0	8.85
Wastes:				
High Level	4.40	0.44	2.30	7.45
Cladding	3.30	0.33	1.70	5.58
Alpha-Beta-Gamma	1.65	0.15	0.83	2.76
Alpha-only	1.65	0.17	1.05	3.45
Beta-Gamma	0.05	0.01	0	0
Other	0.66	0.07	0.42	1.38
Total	22.64	1.24	6.64	30.58
Per 1000 MWe Served	0.42	0.24	0.26	0.35

4.8.5 Conclusions and Recommendations

There are significant uncertainties in current projections of special material transportation requirements and costs due to lack of firm information on future regulatory requirements, equipment and system design features, facility operating practices, etc. However, the general conclusion can be drawn from this study that associated costs for dispersed facility siting are 1.2 to 1.8 times those for reference energy park cases but that these differences are not significant relative to overall fuel cycle costs. Elimination

of the need for shipping Pu-bearing fuel between sites would reduce fissionable material diversion potential, and elimination (or reduction) of spent fuel shipments would reduce risk exposure from major transport accidents which may be considered as significant advantages.

In regard to the various transported materials, it is apparent that shipments of spent fuel and of high level and cladding wastes are the major cost contributors, largely because of the need for relatively expensive shielding caks having low payload to gross weight ratios. There are economic incentives to use casks of the maximum practical size for such shipments. Additional attention should be given to cask design criteria for resistance to accident forces, etc. which will be responsive to carrier and public concerns so that suitable casks capable of transport at favorable rates can be available when needed. Shipping costs for other transuranic wastes also will be of significance to reprocessing and MO_2 fuel fabrication plant operators so that development of necessary design criteria is important here as well.

Plant location relative to authorized waste storage and disposal sites, as well as proximity of reactors, reprocessing and refabrication plants, etc. to one another, will affect special material transportation costs. For example, location of an authorized low level waste disposal site at or near a nuclear energy park (as assumed for the larger reference cases) would appear appropriate. Final site selection for the Federal Retrievable Surface Storage Facility will affect the relative attractiveness of alternative energy park locations based on accident risk exposure as well as transportation cost considerations. Further evaluation should be made of these factors when more definitive information on waste transportation requirements, design-basis accident forces, special transport cask fabrication costs, carrier rates, potential environmental impact, etc. has been developed.

Subchapter Contents

		Page No.
4.9	ENVIRONMENTAL ASPECTS - NUCLEAR PARK VS. DISPERSED PLANTS	4-236
4.9.1	Primary Factors	4-236
4.9.2	Offsite Exposure Modes	4-241
4.9.3	Environmental Regulations and Trends	4-247
4.9.4	Further Environmental Evaluations and Developments	4-248

4.9 ENVIRONMENTAL ASPECTS - NUCLEAR PARK VS. DISPERSED PLANTS

4.9.1 Primary Factors

Several major aspects of energy parks versus dispersed power generation and fuel facilities which are common to nuclear and fossil plants are discussed in other parts of this energy park study, e.g.:

Land Use
Water Availability and Requirements
Air Pollution Control
Thermal Effluent Control
Climatic Effects

Environmental aspects unique to the nuclear fuel cycle and control of radioactive materials are discussed in detail in other parts of this study, and are collected in summary comparative form in Table 4-38.

It is a basic premise that offsite radiation exposures and doses to individuals and populations will not be permitted to exceed the legal limits whether from nuclear parks and/or dispersed plants exposing the same persons. A question is whether exposures from parks may be more or less than from dispersed plants. It is quickly evident that quantitative evaluations, and particularly distinguishing significant differences between parks and dispersed plants, are highly dependent on specific site conditions. Because this study is not site specific, the significant radiological aspects are discussed below, but quantitative evaluations are left to other studies -- an example is the short survey document "Radiological Impact of a Nuclear Center on the Environment"[22] discussed below.

The U. S. Nuclear Regulatory Commission is performing a study to locate and identify possible nuclear energy sites. Section 207 of the Energy Reorganization Act of 1974 charged the NRC to report back to Congress by October 11, 1975. The survey is to include a regional evaluation of natural resources, including land, air, and water resources, as well as estimates of future electric power requirements that can be served by each center, the economic impacts, the environmental impacts of such centers compared to separate siting of nuclear facilities, and consideration of the use of property federally owned or designated for other public use, excluding national parks, forests, wilderness areas and historic monuments.

Table 4-38 Environmental Aspects, Dispersed Nuclear vs. Parks

DISPERSED NUCLEAR (PRESENT MODE) RADIOACTIVE RELEASES TO ATMOSPHERE	NUCLEAR PARK
1. AS LOW AS PRACTICAL (ALAP) FOR 1 TO ~4 REACTORS; WELL BELOW 10CFR20 LIMITS	SAME ALAP METHODS, FOR 1 TO ~20 REACTORS; STILL WELL BELOW 10CFR20 LIMITS
2. NO SYNERGISM BETWEEN REACTORS AND GEOGRAPHICALLY REMOTE REPRO/FAB*; ALAP FOR EACH	ALAP FOR REACTORS AND SIMILAR ALAP FOR ONSITE REPRO/FAB; STILL WELL BELOW 10CFR20 LIMITS
3. PROCESS OFFGAS, ALAP (DECAY, FILTERS, STACK OR BOTTLE)	SAME
4. VENTILATION AIR, ALAP (ROOF VENTS, OR FILTER AND STACK)	SAME
5. COOLING POND OR TOWER VAPORS, MAY ASSIST OR INTERFERE WITH RADIOACTIVE AEROSOL RELEASES	SAME, EXCEPT POSSIBLY MAGNIFIED BY MORE VAPORS
6. LARGE REPRO/FAB FOR ECONOMY TO SERVE REGIONAL DISPERSED REACTORS	REPRO/FAB MAY BE SMALL FOR 1 PARK; MEDIUM TO SERVE SATELLITE PARKS; OR LARGE TO ALSO SERVE REGIONAL DISPERSED REACTORS
7. REPRO/FAB IN SMALL EXCLUSION AREA, MAY BE IN SMALL OR LARGE INDUSTRIAL SITE ACCESSIBLE TO PUBLIC	REPRO/FAB IN SMALL EXCLUSION AREA TOWARD CENTER OF LARGE SECURED PARK
8. LIQUID RADWASTES RETAINED FOR ALAP	SAME
9. CONDENSER LEAKS, GENERALLY INWARD UNLESS SHUTDOWN REVERSAL; DISPERSED OUTLETS AND EFFECTS	SAME, EXCEPT POTENTIALLY MORE FREQUENT DISCHARGES INTO ONE LOCALIZED ENVIRONMENT

* REPROCESSING/FABRICATION/WASTE FACILITIES

..continued next page..

(Table 4-38 continued p. 2)

DISPERSED NUCLEAR	NUCLEAR PARK
RADIOACTIVE RELEASES TO RIVER OR OCEAN	
10. REACTOR PONDS REMOTE FROM REPRO/FAB PONDS (COOLING AND CHEMICALS)	COMMON POND FOR REACTOR AND REPRO/FAB COOLING; ADJACENT POND FOR REPRO/FAB CHEMICALS
11. NO ONSITE BURIAL AT REACTORS. AT REPRO/FAB SITE, BURIAL TRENCHES FOR SLIGHTLY BETA-GAMMA CONTAMINATED SOLIDS. BOTH SHIP SIGNIFICANT ALPHA, BETA, GAMMA CONTAMINATED TO COMMERCIAL BURIAL GROUND OR NATIONAL REPOSITORY	BURIAL TRENCHES FOR SLIGHTLY BETA-GAMMA CONTAMINATED SOLIDS (EQUIPMENT, CONCRETED RESINS AND CHEMICALS). SHIP SIGNIFICANT ALPHA, BETA, GAMMA CONTAMINATED SOLIDS TO COMMERCIAL BURIAL GROUND OR NATIONAL REPOSITORY
SHIPMENTS OF RADIOACTIVE MATERIALS	
12. SHIELDING, VENTING, ACCIDENTS (BREAK OPEN), LEAKS; GREATER PROTECTIONS NEEDED FOR CROSS-COUNTRY, HIGH SPEED RAIL OR TRUCK, WEATHER, DELAYS	ONSITE BETWEEN REACTORS AND REPRO/FAB, ISOLATION AND SAFEGUARDS, LOW SPEED, POSSIBLY THROUGH PIPES OR TUNNELS, SCHEDULE CONTROL
13. NEW, SPENT AND RECYCLE FUEL SHIP CROSSCOUNTRY	NEW FUEL FROM OFFSITE, BUT SPENT AND RECYCLE FUEL STAY IN PARK
14. WASTES: SHORT TERM STORAGE AT REACTORS, THEN SHIP CROSSCOUNTRY. LONG TERM (e.g. 5-10 YR) STORAGE OF REPRO/FAB HIGH LEVEL WASTES, THEN SHIP TO NATIONAL REPOSITORY	REACTOR WASTES COMBINE WITH REPRO/FAB WASTES FOR ONSITE BURIAL, LONG TERM STORAGE, SHIPMENT TO NATIONAL REPOSITORY
15. BYPRODUCTS: REACTOR IRRADIATIONS; REPROCESSING Np	SAME

..continued next page..

(Table 4-38 continued p. 3)

DISPERSED NUCLEAR	NUCLEAR PARK
ENVIRONMENTAL MONITORING	
16. REACTOR AND REPROCESSING FABRICATION RADIOISOTOPES GEOGRAPHICALLY SEPARATED	REACTOR, REPROCESSING AND FABRICATION RADIOISOTOPES MIXED IN ENVIRONS
17. SENSITIVITY FOR ALAP RELEASES AND OFFSITE EXPOSURE LEVELS	SAME
ACCIDENTS AND EMERGENCIES	
18. EFFECTS ON ADJACENT FACILITIES: MORE FOR DUAL REACTOR PLANT; NONE FOR REMOTE REPRO/FAB	EFFECTS ON ADJACENT FACILITIES: LESS FOR SEPARATED UNITS, BUT MORE UNITS MAY BE AFFECTED BY ONE. CONSTRUCTION AREAS "PUBLIC"
19. EFFECTS OFFSITE: SMALL EXCLUSION AREAS, EVEN IF IN INDUSTRIAL PARK OPEN TO PUBLIC	EFFECTS OFFSITE: SMALL EXCLUSION AREAS BUT IN LARGER SECURED OPERATIONAL AREA; CONSTRUCTION AREAS WILL BE CONSIDERED "OFFSITE", OPEN TO PUBLIC - AT LEAST THOSE WITH OFFICIAL BUSINESS SUCH AS DELIVERY VEHICLES, CONTRACTORS, THROUGH CONSTRUCTION AREA GUARD HOUSES
20. EXTERNAL FORCES (HURRICANE, TORNADO, EARTHQUAKE, FLOOD, GOVERNMENT, KAMIKAZE, STRIKE, SABOTAGE, WAR): SMALL AREAS MORE LIKELY TO BE ENCONPASSED, BUT REGIONAL POWER BLOCK LESS VULNERABLE	EXTERNAL FORCES (SEE DISPERSED AT LEFT): LARGE NUMBERS OF UNITS LESS LIKELY FOR TOTAL SHUTDOWN, BUT LARGE BLOCK OF POWER AT RISK

..continued next page..

(Table 4-38 continued p. 4)

DISPERSED NUCLEAR	NUCLEAR PARK
21. RECOVERY RESOURCES LESS ONSITE; MORE DEPENDENT ON OFFSITE COMMUNITY SERVICES (BELOW)	MORE RECOVERY RESOURCES IN PARK, INCLUDING CONSTRUCTION EQUIPMENT, BORROWING FROM PLANTS IN CONSTRUCTION; LESS DEPENDENCE ON OFFSITE FIRE FIGHTERS, POLICE, DOCTORS, FIRST AID, COMMUNICATIONS, NEWS AGENTS
COMMUNITY SERVICES	
22. COMMUNITY PHYSICIAN(S) SPECIALLY TRAINED; OFFICE CALLS; SITE VISITS; COMMERCIAL HOSPITAL AND LAB SERVICES	PARK PHYSICIAN(S) AND NURSES FOR ROUTINE EXAMS AND RADIATION EMERGENCIES; ONSITE MEDICAL CENTER
23. SEVERE CONTAMINATION SURGERY: MOST HOSPITALS OR MORGUES COULD STORE PORTABLE SHIELDING; CAN ADAPT STERILE TECHNIQUES FOR CONTAMINATION CONTROL	ONSITE MEDICAL CENTER DESIGNED FOR CONTAMINATION CONTROL AND SHIELDED SURGERY, PLUS PORTABLE SHIELDING IF PATIENT CAN'T BE MOVED TO CENTER
24. TRAIN PLANT OPERATORS FOR FIRE; TRAIN COMMUNITY FIREMEN FOR NUCLEAR	ONSITE FIRE BRIGADE AND STATION; COMMUNITY BACKUP
25. LOCAL POLICE OR SHERIFF FOR OFFSITE CONTROL, AND BACKUP PLANT GUARDS	ONSITE SECURITY FORCE MAY INCLUDE DEPUTY SHERIFFS; BACKUP AND OFFSITE BY LOCAL POLICE AND SHERIFF
26. PLANT MANAGEMENT HANDLES PUBLIC RELATIONS	PARK PUBLIC RELATIONS REPRESENTATIVE

4.9.2 Offsite Exposure Modes

Offsite exposures to radiation and radioactive materials from nuclear parks or dispersed sites via air, water, foods or other exposure pathways, and the actual biological doses received, are dependent on the plant control technologies, the characteristics of the radioactive effluents and the distances and locations of individuals and populations around the sites.

Direct radiation from plant operations or from radioisotopes within containments after accidents, is decreased approximately inversely as the square of the distance from the source to the receptor, and also by intervening structures providing shielding. Thus, the arrangement of buildings and cooling towers or ponds, isolation afforded by river, lake, or restricted lands, and distance to public areas of high occupancy factors, might tend to favor large parks in general, but could be arranged to best advantage of either park or dispersed site in specific cases. However, direct radiation doses, even from transportation, are readily controlled to small levels compared to regulatory limits without resorting to arranging intervening buildings onsite.

The radioactive effluents from reactors, fuel reprocessing, fuel fabrication, and waste treatment facilities are of the same kind, whether in parks or dispersed sites. Local discharges may be more frequent or larger because there are more reactors in a park or larger reprocessing/fabrication/waste facilities at a dispersed site.

Because of the process leaks, ventilation air from nuclear power plants may contain small amounts of biologically significant radioisotopes such as tritium from coolant activation or xenon, krypton, and iodine from fuel. The nuclear plants are designed to capture (contain) large process leaks or accidents, and the air is processed by decay, filters, charcoal adsorbers, etc., before release.

Reactor offgas contains more of the same isotopes and is processed by decay, filters, and adsorbers before release, and in some plants by cryogenic liquefaction to bottle noble gases for decay and release or long term storage. Condenser cooling water may be slightly contaminated by reverse leakage during shutdown, and may also be used to dilute contaminated water wastes in which the radioisotope concentrations are below regulatory release limits. Solid wastes and radioisotopes are contained and stored or sent to a burial ground.

The effluents from spent fuel reprocessing, fabrication, and waste treatment are discussed extensively in the following subchapters. The process concentrations are orders of magnitude greater than in the reactors, and the effluent treatments and controls are correspondingly greater. Before reprocessing, spent fuel from a LWR may be decayed in the order of 150 days, but the LMFBR fuel cycle profits from short times, so decay may be as little as 30 days. Numerous and large amounts of biologically significant isotopes are processed, so the main control is containment and storage. High efficiency filters and charcoal adsorbers treat the ventilation air. Iodine is removed from process gases by silver impregnated columns, particularly since the long lived iodine-129 (half life 16 million years) is of concern even after 8-day iodine-131 has decayed away. Krypton-85 (half life 10.8 years) has been of interest because, being a noble gas not removed from the environment by natural processes other than decay, its continued release to the atmosphere might build up to significant biological exposure levels. The long lived alpha emitting radionuclides plutonium, americium, and curium from fuel reprocessing, and plutonium from MO_2 (mixed U-Pu oxide) fuel fabrication have been of concern because of potential lung and bone doses.

Many studies and predictions have been made of the pathways and biological effects of the radioisotopes released or escaping from the nuclear plants to the environment. These studies justify the expensive controls to keep the bulk of the radioisotopes within the processes, but also are convincing that the controls are technologically available to keep present and future environmental doses well below prescribed limits.

The USAEC draft report, "The Generic Environmental Statement on the Use of Recycle Plutonium in Mixed Oxide Fuel in LWRs - GESMO"[12] is an excellent compendium of the radioisotopes and their environmental effects. For example, Table IV-(A-1) lists these quantities of the principal gaseous effluents per annual fuel requirement of the model 1000 MWe LWR:

	Curies	
I-129	0.0026	* "Whole body dose (from tritium) is 6 man-rem per annual fuel requirements for population within 50 mile radius. This is <0.007% of average
I-131	0.024	
Fission products and transuranics	1.01	
Tritium	17,800*	
Kr-85	350,000	

natural background dose
to this population."
(100 persons/sq. mi.,
p. IV J(A)-9, equals
785,000 persons.)

The quoted footnote indicates that even the apparently large amounts of tritium will actually cause insignificant doses. Assuming 26,000 MWe in a park or dispersed sites might mean an annual whole body dose from airborne tritium of 156 man-rem, compared to the prescribed limit of 0.170 rem/yr/person times 785,000 persons = 133,000 man-rem, or about 0.1% of the limit. This may be compared to the As-Low-As-Practical (ALAP) regulatory guides which are generally about 1% of prescribed limits.

Similarly the krypton-85 controls can readily keep offsite doses to insignificant levels. Hendrickson [24] is one of several who have evaluated the dose from Kr-85 released to the Earth's atmosphere from the nuclear power industry. He quotes various estimates that the Kr-85 releases (such as the 350,000 ci/yr/1000 MWe above) may eventually reach concentrations of 2-to-30 x 10^{-8} microcuries per cubic centimeter in air by the year 2050, assuming coincidence of the worst conditions. Thus the upper value, 30 x 10^{-8} μCi/cc, results if:

- Essentially all electricity (50 billion kilowatts by year 2050) was produced by nuclear electric plants,
- All the Kr-85 produced was released from the reactors and reprocessing plants,
- It was released at the U. S. regulatory limit (10CFR20), and
- It was diluted in only 1/4 of the Earth's total atmosphere.

He shows that the resulting annual doses to a person would be 0.007 rem from the penetrating beta and gamma radiation to the whole body compared to the offsite individual limit of 0.170 rem/yr, or 4%, and 0.3 rem from the weak beta radiation to the skin compared to the ICRP limit of 3 rem/yr, or 10%. However it is recognized that the skin limit for the weak beta from Kr-85 should be increased by a

factor of 6 to 10, making the 0.3 rem/yr about 1% of the appropriate limit.

Plutonium and the other long lived alpha emitting radionuclides such as americium and curium potentially can escape or be released from the nuclear plants. They must also be controlled to low environmental levels because of the intense biological effect of these alpha nuclides depositing in the body in radiosensitive tissue such as bone marrow. There is current controversy that plutonium oxide particles retained in the lung should be considered as intense "hot spot" cancer producers, rather than as more diffuse energy sources of some mobility in the lung as shown by years of animal experiments and human exposures. The advocates of the "hot particle" hypothesis may resort to legal avenues in the face of yet another technological rebuttal[11], according to Nuclear News, December 1974.

It is informative to compare the alpha radioactivity presently in the environment with predictions of that released from the nuclear power industry.

Table 4-39 - Where the Alpha Curies Are

LOCATION	RADIOISOTOPE	ALPHA CURIES	REF.*
OCEANS	RADIUM-226	420,000,000	25 26, p.211
AIR(TROPOSPHERE)	RADON-222	600,000,000	27, p.53
	THORON (Rn-220)	200,000,000	27, p.53
U.S. LAND (TOP FOOT)	Ra-226	3,000,000	26, p.210
	Rn-222	500,000	27, p.53
	Rn-220	200,000?	27, p.53
U.S. SURFACE WATER	Ra-226	2000/yr	28, p.22 29
FALLOUT - WORLDWIDE -	Pu	320,000	12, VOL.2, p.32
U.S. LAND	Pu	8,000	30, p.67
U.S. FARMLAND	Pu	800	10% OF U.S. LAND
	Ra-226	300,000	
	Ru-222	50,000	
IN U.S. PEOPLE (200 MILLION POPULATION)	Ra-226	<0.1	31
	Pu	~0	12, VOL.2, p.32

*WITH ACKNOWLEDGMENT TO J.M. SMITH, GENERAL ELECTRIC CO., FEBRUARY 1975, FOR INTERPRETATIONS OF DATA

Pigford[32] has prepared one of the most extensive estimates of plutonium in nuclear industry fuel and releases to the environment.

Table 4-40 - Estimated Plutonium Releases in Air Effluents [32]

	CURIES PER YEAR OF ALPHA-EMITTING Pu		
FUEL REPROCESSING	1980	1990	2000
RANGE OF RELEASE FRACTION:			
$f = 2.9 \times 10^{-8}$	0.23	1.9	4.6
$f = 1.4 \times 10^{-11}$	0.00011	0.00091	0.00230
FUEL FABRICATION			
$f = 1.1 \times 10^{-9}$	0.0011	0.046	0.087
$f = 5 \times 10^{-13}$	5.2×10^{-7}	2.1×10^{-5}	4.0×10^{-5}

Thus if we assume an average 2 Ci/yr release for 20 years, there may be a total of 40 Ci Pu released, compared to the 320,000 Ci Pu worldwide or 8000 Ci Pu in the U. S. from past weapons testing fallout.

Similarly the available technology controls applied to the containment and release of the radioactive iodines can be shown to prevent significant human doses in the environment, considering the fractional Curie releases described above from GESMO[12].

This discussion is intended not to imply that there will be no environmental radiation effects from nuclear parks or dispersed plants, but rather to maintain a rational perspective about the magnitude of controls needed and the insignificance of doses that can be achieved with responsible care in design and operations.

Soldat[23] has prepared a preliminary study of the "Radiological Impact of a Nuclear Center on the Environment" for WASH-1288[9]. He described some generic calculations of offsite exposures from liquid and gaseous effluents from present types of nuclear power plants, fuel reprocessing plant, PuO_2-UO_2 fuel fabrication plant and waste management facilities. On the basis of As Low As Practicable (ALAP) guides of the type presently being promulgated by the U. S. regulatory agencies for such plants, and provision of relevant process

controls available or adaptable from present technology, the calculated doses to individuals offsite and the public are indicated to be small fractions of the applicable limits. The study suggests that a nuclear center or park containing as much as 30,000 to 40,000 MWe total generating capacity together with associated fuel reprocessing, fabricating, and waste facilities can meet environmental dose regulations. It emphasizes that quantitative evaluations, and particularly comparisons between parks and dispersed sites, are highly dependent on specific site characteristics such as cooling mode (ponds, towers, river, or ocean) and isolation distance from public areas. The study indicates that "the radiological impact (of a specific site) could be different than derived here for the generic site, but in all probability the net impact would not be significantly greater because of the conservative assumptions employed".

The environmental aspects of including a small uranium enrichment facility using gas centrifuges in a large nuclear park have been considered briefly. Such an arrangement might be desirable for safeguards reasons especially where highly enriched uranium is needed for an HTGR, as well as for the availability of electrical power. The UF_6 gas phase process containment provisions would not be appreciably different from those necessary in a fuel reprocessing plant to prepare the uranium stream for fuel fabrication (see typical flowsheets in Nuclear Fuel Reprocessing subchapter). Protection against criticality accidents would depend on the enrichments to be processed.

4.9.3 Environmental Regulations and Trends

U. S. government regulations determining the design and operation of nuclear plants whether in parks or dispersed sites, in regard to environmental radiation exposure aspects are:

10CFR11	Environmental Statements - Operations (including compliance with Section 309 of the Clean Air Act requiring review by the Environmental Protection Agency)
10CFR20	Standards for Protection Against Radiation
10CFR50	Licensing of Production and Utilization Facilities (Including especially Appendix F on study of fuel reprocessing and waste management facilities, and proposed Appendix I on As Low As Practicable release criteria)
10CFR70	Special Nuclear Material
10CFR71	Packaging of Radioactive Material For Transport and Transportation of Radioactive Material Under Certain Conditions
10CFR73	Physical Protection of Plants and Materials
10CFR100	Reactor Site Criteria
10CFR140	Financial Protection Requirements and Indemnity Agreements (including offsite radiation criteria to determine that there has been an "extraordinary nuclear occurrence").
10CFR150	Exemptions and Continued Regulatory Authority in Agreement States Under Section 274

In addition there are several hundred Regulatory Guides covering Power Reactors, Fuels and Materials Facilities, Environmental and Siting, Materials and Plant Protection, Product, Transportation, and Occupational Health.

Transportation regulations for control of radiation exposures to the public are issued by the Department of Transportation (49CFR170-189 for rail and truck), Federal Aviation Authority (14CFR103), Coast Guard (46CFR146), and Post Office (39CFR).

Additional requirements are published by the states, counties, cities, carriers, and international agencies, while industry standards are published by ANSI, ASME, and various other Code committees.

4.9.4 Further Environmental Evaluations and Developments

It was pointed out earlier that quantitative evaluations of nuclear park or dispersed plant environmental radiation effects will require specific site factors on process controls and containment, shielding, discharge elevation, distance to boundary, modes of individual and population exposure, and number of people in the potentially affected environs. No strong generic differences are evident between parks and dispersed sites, unless boundary distance might be more favorable for parks. More people might be affected by a number of dispersed power plants, reprocessing, fabrication and waste facilities, and transportation of radioactive materials among them, than by one or a few parks of equivalent power production. On the other hand, when design basis releases of radioisotopes from effluents or accidents are added in real time for the park, even though each plant meets ALAP guides, the resultant calculated exposures may be close enough to legal limits that some of the park facilities will need more control equipment and procedures than the dispersed plants to get and keep the operating licenses.

Important developments to watch are thus:

(1) the proposed ALAP guides (10CFR50 Appendix I) for individual plants and any further changes for combinations;

(2) any change in siting guides from concern that too many residences may accumulate around a park complex;

(3) any significant buildup of worldwide contaminants such as plutonium from weapons, noble gases from inadequately controlled reprocessing, tritium or carbon-14 in the biosphere, especially where different radiation exposures have additive or synergistic effects on critical organs in the body;

(4) the plutonium "hot particle" controversy;

(5) the LMFBR short-decay fuel reprocessing incentive (this may require improved technology);

(6) realistic evaluation of accidents or events in a park that require shutdown of some other facilities or the whole power production; and

(7) the results of the Nuclear Regulatory Commission's survey of potential nuclear park sites, including present complexes such as Hanford and Savannah River or other federal reservations.

Subchapter Contents

		Page No.
4.10	SAFEGUARDS ASPECTS	4-250
4.10.1	Introduction	4-250
4.10.2	Federal Regulations - Safeguards	4-255
4.10.3	Armed Intrusion vs the MUF Problem for PuB Parks	4-256
4.10.4	Denatured Plutonium Approach to Safeguards	4-257
4.10.5	Specific PuB Park Provisions and Costs for Safeguards	4-259

4.10 SAFEGUARDS ASPECTS

4.10.1 Introduction

While the issue of safeguarding against unauthorized diversion of strategic special nuclear materials* has been present since the earliest days of the industry, recent attention, particularly that stimulated by Willrich and Taylor[45], has resulted in a new level of scrutiny of nuclear fuel material handling practices and plans.

A desirable objective would be to so arrange the fuel cycle as to eliminate the SNM diversion threat or at least to reduce the net expected risk for the general public to a level comparable to or lower than that from other forms of mal-operation of nuclear facilities. The Rasmussen report[46] provides the industry a step advance in rigorous analysis of the risk exposure and critical aspects or "weak links" insofar as nuclear power plant mal-operation is concerned. A comparable study might be appropriate to more exhaustively define the "fault chains" for risk assessment in the SSNM safeguards area. While no publications of comparably rigorous assessments are known of at this time, it is presumed that extensive evaluations have been conducted for the case of safeguarding military weapons and materials. Further, illustrative charts have recently been presented in the LMFBR Program Environmental Statement[14] and are reproduced in Figures 4-56 and 4-57.

The nuclear weapons program represents an ever-present target for terrorist groups, should they ever have SNM diversion as their objective. The civilian nuclear power program thus constitutes a potential extension of this "target" and one which within the next few decades could exceed it. By 2020 it has been estimated that as much as 5000 tons of plutonium may be in use involving as many as 100,000 shipments/yr between dispersed sites. Certain trends appear to have resulted from safeguards evaluations for these military weapons and materials and, in the absence of a rigorous "fault tree" safeguards analysis for power reactors and their fuel facilities, these observed trends have been used as a starting point for the present study:

1. Transportation of materials and components at several stages of "the process" is acceptable; colocation is not considered a "must".

2. Protection or safeguarding of SNM in transit between facilities is accomplished without extensive armed

* SSNM: fissile plutonium, U-233, or uranium enriched to more than 20% with U-235.

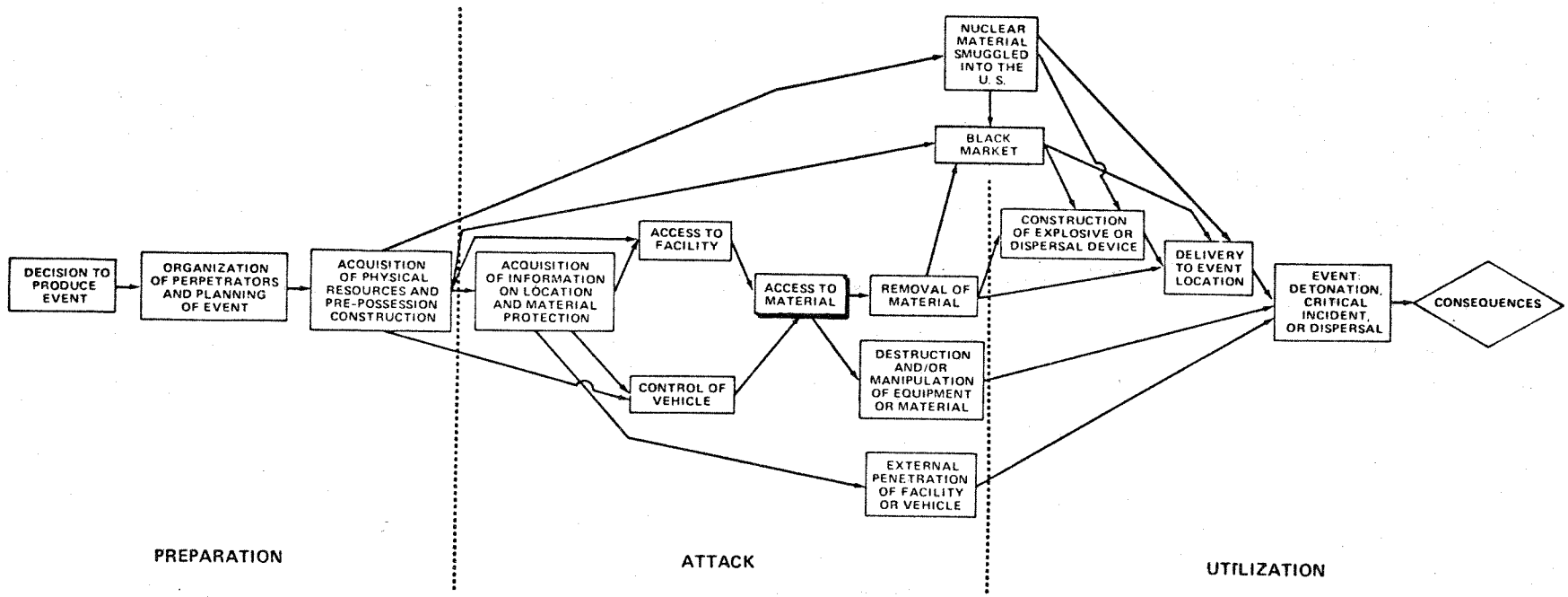

(From WASH-1535
Figure 7.4-4)

Figure 4-56 Adversary Action Sequences

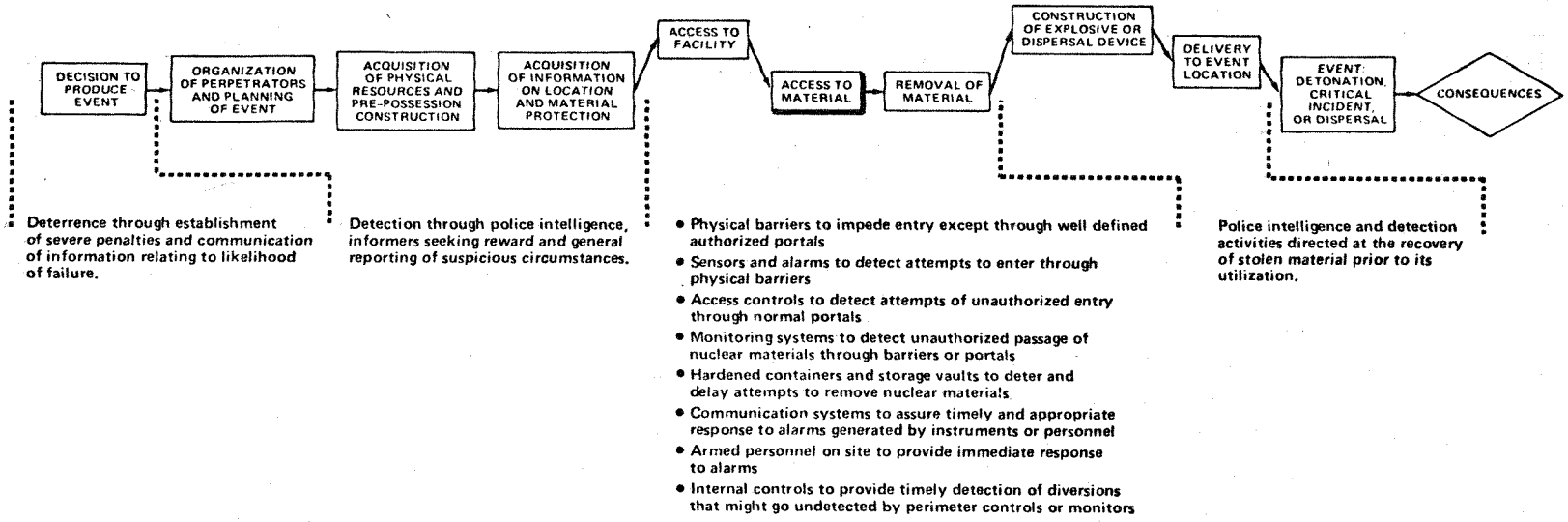

(From WASH-1535
Figure 7.4-5)

Figure 4-57 An Example Adversary Action Sequence and Associated Interruption Activities

escort; alternative "immediate trouble alert" plus delayed access techniques have been judged preferable.

3. Protection or safeguarding of SNM within production and storage facilities, while based on rigorous monitoring and armed security forces, does not contravene civil liberties. Scope still exists for further protection through the "immediate trouble alert", delayed access and retrieval concepts relied on extensively in transportation.

The above observations suggest that in the absence of rigorous analysis there is little to support the public concern that armed intrusion or hijacking of materials in transit will prove to be significant threats for the industry. By comparison the organized pilferage of SNM, for which little or no documented experience has been found, may prove a far more burdensome matter. The latter is far less dramatic, at a stage ("Access to Material" of Figure 4-56 and 4-57) when the terrorist is not expected to seek drama. Review of the fairly extensive safeguards documentation in Section 7.4 of the LMFBR Environmental Statement [14] neither adds to nor detracts from this view.

Thus for the present study it is presumed that there is little if any difference in the basic SNM safeguarding ability for nuclear parks as compared to dispersed plants and fuel cycle facilities among similar sized installations. This does not mean that there are not other environmental or economic considerations but that the safeguards issue for materials in transit is unlikely to prove, long term, to be the overriding one.

Table 4-41 is a compilation of some of the more significant safeguards considerations recognized in the course of the current study.

Table 4-41 Safeguards Comparison - Dispersed Sites vs. Parks

DISPERSED	PARK
PERSONNEL ACCESS	
• FEWER PEOPLE FOR ACCESS AND INSIDE CONTROLS PER SITE BUT MORE PER MWe INSTALLED	MORE CONSTRUCTION, DELIVERY, & OPERATIONS PEOPLE AT ALL STAGES OF SITE DEVELOPMENT. PROGRESSIVE CONSTRUCTION FENCING MAY LEAVE REPROCESSING/FABRICATION FACILITY AS EXPOSED AS DISPERSED
• LESS AREA AND PERIMETER PER SITE, BUT MORE SITES	LARGE AREAS AND PERIMETERS FOR INTRUSION CONTROLS, BUT FEWER SITES
• MAY BE CLOSER TO RESIDENTIAL AREAS AND UNAUTHORIZED PUBLIC; LARGER TOTAL NUMBER	MAY BE MORE REMOTE FROM GENERAL PUBLIC, EXCEPT CO-LOCATED INDUSTRIES AND COMMUNITY
TECHNOLOGY/PROCESS SEPARATION	
• SEPARATE ENRICHMENT, REPROCESSING, REFABRICATION, AND REACTORS MEAN MORE TARGETS AND MORE TRANSPORT	ONSITE REACTORS, FUEL STORAGE, ENRICHMENT, REPROCESSING, REFABRICATION, WASTE FACILITIES ELIMINATE MOST OR ALL OFFSITE TRANSPORT OF Pu AND OTHER SNM
• RELIANCE ON LARGE SEPARATE ENRICHMENT FACILITIES AND SAFEGUARDS	MAY HAVE SMALL GAS CENTRIFUGE FACILITIES (HTGR?) TO AVOID SNM TRANSPORT
INTRUSION VULNERABILITY/DISRUPTION	
• LESS EFFECT ON POWER SYSTEM CAN BE THREATENED	INTERPLANT EFFECTS OF SABOTAGE, STRIKES, BUT MORE PROTECTION AND ONSITE RECOVERY RESOURCES ARE PRACTICAL

4.10.2 Federal Regulations - Safeguards

Federal regulations for physical protection of nuclear plants and materials are published in 10CFR73 (see box), supplemented by USAEC (now NRC) Division 5 Regulatory Guides.

The recent LMFBR Environmental Statement (WASH-1535) [14] has enumerated planned safeguards program elements for the LMFBR program; they are considered representative of actions for any system involving SSNM and are quoted below:

"7.4.2 Safeguards Objectives and Program Elements.

Safeguards measures are designed to deter, prevent, or respond to (1) the unauthorized possession or use of significant quantities of nuclear materials through theft or diversion and (2) sabotage of nuclear facilities. The safeguards program has as its objective achieving a level of protection against such acts to ensure against significant increase in the overall risk of death, injury, or property damage to the public from other causes beyond the control of the individual. The program includes the following functional elements:

(1) definition of the nature and dimensions of the threat;

(2) development and imposition on the nuclear industry of safeguards requirements directed toward countering the threat;

(3) licensing activities, including review of safeguards procedures proposed by nuclear industry applicants, as required by regulations;

Extract from USAEC 10CFR73

General Provisions

§ 73.1 Purpose and scope.

(a) *Purpose.* This part prescribes requirements for physical protection of special nuclear material at fixed sites and in transit and of plants in which special nuclear material is used, for the purpose of protection against acts of industrial sabotage and protection of special nuclear material against theft by establishment and maintenance of a physical protection system of: (1) Protective barriers and intrusion detection devices at fixed sites to provide early detection of an attack, (2) deterrence to attack by means of armed guards and escorts, and (3) liaison and communication with law enforcement authorities capable of rendering assistance to counter such attacks.

(b) *Scope.* (1) This part prescribes requirements for (i) the physical protection of production and utilization facilities licensed pursuant to Part 50 of this chapter; (ii) the physical protection of plants in which activities licensed pursuant to Part 70 of this chapter are conducted, and the physical protection of special nuclear material, by any person who pursuant to the regulations in Part 70 of this chapter possesses or uses at any site or contiguous sites subject to control by the licensee, uranium-235 (contained in uranium enriched to 20 percent or more in the U-235 isotope), uranium-233, or plutonium alone or in any combination in a quantity of 5,000 grams or more computed by the formula, grams=(grams contained U-235)+2.5 (grams U-233+grams plutonium).

(2) This part prescribes requirements for the physical protection of special nuclear material in transportation by any person who is licensed pursuant to the regulations in Part 70 of this chapter who imports, exports, transports, delivers to a carrier for transport in a single shipment, or takes delivery of a single shipment free on board at the point where it is delivered to a carrier, either uranium-235 (contained in uranium enriched to 20 percent or more in the U-235 isotope), uranium-233, or plutonium, or any combination of these materials, which is 5,000 grams or more computed by the formula, grams=(grams contained U-235)+2.5 (grams U-233+grams plutonium).

(3) This part also applies to shipments by air of special nuclear material in quantities exceeding (i) 20 grams or 20 curies, whichever is less, of plutonium or uranium-233, or (ii) 350 grams of uranium-235 (contained in uranium enriched to 20 percent or more in the U-235 isotope).

(4) Special nuclear material subject to this part may also be protected pursuant to security procedures prescribed by the Commission or another Government agency for the protection of classified materials. The provisions and requirements of this part are in addition to, and not in substitution for, any such security procedures. Compliance with the requirements of this part does not relieve any licensee from any requirement or obligation to protect special nuclear material pursuant to security procedures prescribed by the Commission or other Government agency for the protection of classified materials.

"(4) inspection of safeguards implementation to ensure adequacy;

(5) enforcement of requirements through administrative, civil, or criminal penalties;

(6) administrative and technical support for response and recovery;

(7) development and testing of methods, techniques, and equipment necessary to the effective implementation of safeguards;

(8) continuous program review in the light of industrial/technical or social/political changes to assure that any needed changes are made in the program elements above."[14]

4.10.3 Armed Intrusion vs. the MUF Problem for PuB Parks

Assuming some redirection of the focus of safeguards attention to areas other than armed intrusion and further strengthening of armed protection, there will be some lessening of the incentives for elimination of SNM transportation requirements through the introduction of integrated facilities and, in the limit, the PuB parks. The question then arises as to how other aspects of the safeguards problem compare between dispersed and integrated facilities.

If the resultant integrated facilities or PuB parks are planned to be supercomplexes of many times the scale of operation of the alternative dispersed site facilities, some risk exists that the Material Unaccounted For (MUF) problem will be accentuated. Even with today's size of industry activities, the control of the risk of diversion by organized pilfer is considered by some to be unsatisfactory. This inevitably suggests still further tightening of limits on accountability - a demand that is already straining technical limits and capabilities to further tighten operating procedures.

The next question concerns how practical it is to contemplate large centralized fuel facilities for improved economy if such scaleup makes the materials accountability requirements proportionally tougher. Indeed it might suggest there is, in some respects, safeguards worth in diversity, i.e. in the encouragement of multiple smaller scale operations for which the cumulated MUF would be proportionally reduced for a given level of materials accountability sophistication.

Alternatively, in larger fuel or park facilities, separated process or production lines with entirely separate personnel and materials accountability activities might be contemplated. Again however, the question arises as to how much cost savings from scaleup can be retained when a greater degree of physical and personnel separation is to be provided.

One further question which remains unanswered as yet is the ability to use tracer techniques (such as a small content of gamma radiation emitter) to block the possibility of organized pilfer through MUF. If such were to prove practicable, the required monitor system may be less burdensome to apply under integrated facility or park circumstances.

4.10.4 Denatured Plutonium Approach to Safeguards

One inherent safeguard measure beginning to receive intensive study is to leave enough fission products in with the plutonium from the reprocessing steps to keep the recycle material dangerously radioactive with penetrating long range gamma radiation. Such FP/Pu product is now being called "denatured plutonium".

There may also be a substantial fraction of spent uranium left in the reprocessing product (e.g. 25% Pu, 75% U) which makes the mixture unusable for nuclear bombs without further chemical processing to purify the fissile plutonium. A large fraction of U-238 (spent U from reprocessing or depleted U from enrichment plant tailings) is used in LWR fuel to maintain inherent doppler-action safety against nuclear excursion accidents in fuel handling and reactor operations.

The term "spiked plutonium" is now being used in safeguard studies to mean fissile plutonium to which a strong gamma radiation material such as cobalt-60 is added to make it too dangerous to steal. The spike could be added in a reprocessing, refabrication, or transportation step to supplement other safeguards but where it would minimize process problems. For example, cobalt chemistry is somewhat foreign to the Purex reprocessing chemistry, so development work might be necessary to add the cobalt in that process. The spike could be intimately mixed into the plutonium product, added within the fuel rods, or placed within the transport container, for example.

One proposed criterion for either denatured or spiked plutonium is that each 5 kg Pu should emit 500 R/h at 1 meter.

The Electric Power Research Institute (EPRI) is sponsoring denaturing studies by General Electric Company and Exxon. Other consulting firms and national laboratories reportedly are also proposing or conducting studies of denaturing or spiking. The U.S. Nuclear Regulatory Commission is concerned with current studies of safeguard measures and threats, as well as maintenance of 10CFR73 and the associated Regulatory Guides.

As MO_2 fuel is repeatedly recycled, more of the higher Pu isotopes are formed, some of which are strong gamma and neutron emitters of safeguards value and some of which are neutron absorbers tending to limit the Pu for fuel. The Pu-236 decay chain, for example, also grows-in some strong gamma emitters, depending on the time after reprocessing. The following Table compiled from GESMO[12] illustrates the changing isotopic Pu content with LWR fuel recycle, including the GESMO reference 1.15 Self-Generating Recycle fuel.

It is seen that denaturing or spiking will affect the entire fuel cycle - reactors, reprocessing, refabrication, waste management, transportation, and possibly even pretreatment for enrichment if the spent U is so recycled. The entire methodology of the fuel cycle as well as the costs are now being studied.

Table 4-42 Plutonium Isotopic Concentrations For Various Recycle Assumptions

	FRACTIONAL COMPOSITION (gm/gm TOTAL Pu)			
ISOTOPE	Pu FROM DISCHARGED UO_2 FUEL[a]	Pu FROM LOW BURNUP MO_2 FUEL[b]	Pu AFTER 3 4-YEAR RECYCLES[a]	EQUILIBRIUM 1.15 SGR NEW FUEL[a]
Pu-236	0.00007[b]	0.00007[b]	0.00007[b]	0.00007[b]
Pu-238	0.02	0.01	0.06	0.04
Pu-239[c]	0.61	0.64	0.29	0.42
Pu-240	0.24	0.22	0.27	0.27
Pu-241[c]	0.10	0.10	0.17	0.15
Pu-242	0.03	0.03	0.21	0.12

(a) From Table IV C-5, GESMO[12]
(b) From Table IV C-1, GESMO[12]
(c) Fissile: Pu-239 + Pu-241

4.10.5 Specific PuB Park Provisions and Costs For Safeguards

Since the inception of the nuclear industry, security and safeguards have been an integral part of plant design, construction and operation. Just as for radiation protection, the safeguard costs are not separately identified in total because of the multiple functions of most equipment and personnel. The costs are also very site specific, and depend on when the plant was built and what requirements it had to meet. Thus it is difficult to identify what the incremental costs of new safeguards requirements will be. They will be more for retrofitting than if incorporated in a design yet to be built.

One of the new intensified safeguards regulations requires search of people and packages passing from room to room. A new plant designed with fewer rooms might achieve a safeguards cost savings.

Typical nuclear facility provisions assumed in this park analysis as necessary to comply with the new more strict requirements of 10CFR73 and the Division 5 Regulatory Guides include:

- Access limitation to one well supervised and guarded entrance.
- A full time materials accountability staff including inspection team
- Fully fenced and patrolled perimeters with intrusion alarms
- A cooling water pond configured as a moat
- Minimum conversion of SNM into packaged or solid forms amenable to transportation

The costs of safeguards features are not separately compiled in this study, but judgemental allowances have been included in the cost estimates for the nuclear power plants, reprocessing, refabrication, waste management, transportation, and site development facilities. These are then included in the overall cost comparisons. The judgments were primarily evolved from LMFBR Environmental Statement[14] data which suggest that for the dispersed site situation with 1500 MT/yr to 2500 MT/yr reprocessing facilities, safeguarding costs would range from 0.1 to 0.2 mills/kWh including capital charges on special investment requirements of $2 to 3-1/2/kWe. These data are summarized in Table 4-43 from Reference 14.

Table 4-43 Costs of Safeguarding Different 80,000 MWe Modules (Millions of 1974 Dollars) (From WASH-1535[14] Table 7.4-17)

	LMFBR	LWR W/O Pu RECYCLE	LWR WITH Pu RECYCLE	HTGR
CAPITAL COSTS				
POWER PLANTS	156	75	120	100
REPROCESSING PLANT	13	8	8	8
FUEL FABRICATION PLANT	21	5	15	15
PLUTONIUM STORAGE FACILITY		10		
HIGH-LEVEL WASTE REPOSITORY	51	51	51	51
ISOTOPE ENRICHMENT PLANT		5	5	8
OTHER FIXED SITES	10	10	10	10
TRANSPORTATION	15	5	7.5	10
TOTAL CAPITAL COSTS	273	169	216	202
OPERATING COSTS (PER YEAR)				
SECURITY PERSONNEL	45	20.2	25	29.6
FIXED CHARGE ON CAPITAL INVESTMENT, @ 16%	42.7	25.4	34.5	32.4
REGULATORY OPERATIONS	4	3	4	4
OTHER	5	4	5	5
TOTAL OPERATING COSTS	96.7	52.6	68.5	71

Subchapter Contents

		Page No.
4.11	POWER PLANT COSTS AND IMPROVED CONSTRUCTION	
4.11.1	Introduction	4-262
4.11.2	Reference LWR	4-264
4.11.2.1	REFERENCE LWR REACTOR BUILDING	4-264
4.11.2.2	" " AUXILIARY "	4-270
4.11.2.3	" " FUEL "	4-271
4.11.2.4	" " DIESEL GENERATOR BUILDING	-272
4.11.2.5	" " RADWASTE BUILDING	4-272
4.11.2.6	" " TURBINE BUILDING	4-273
4.11.2.7	" " MISC. BUILDINGS	4-274
4.11.3	Current LWR Construction	4-274
4.11.3.1	EVOLUTION OF CURRENT LWR CONSTRUCTION	4-274
4.11.3.2	CURRENT LWR CONSTRUCTION SCHEDULES	4-277
4.11.4	Park Construction Assumptions	4-284
4.11.5	Modular Construction	4-285
4.11.6	Construction Facilities	4-292
4.11.6.1	SITE ARRANGEMENT	4-292
4.11.6.2	CRANES AND TRANSPORTERS	4-296
4.11.6.3	FACTORY AND ASSEMBLY AREAS	4-297
4.11.7	Other Construction Economies	4-299
4.11.8	Conclusions and Recommendations	4-300
4.11.9	Cost Data for Park vs Dispersed Site Comparison	4-302
App. 4.A3-1	C.F. Braun & Co., "Modular Construction of Nuclear Power Centers"	4-318
App. 4.A3-2	Nuclear Services Corporation, "Modular Construction Using Steel Water Modules for Nuclear Power Centers"	4-365

4.11 POWER PLANT COSTS AND IMPROVED CONSTRUCTION

4.11.1 Introduction

The construction of a substantial number of basically identical nuclear generating plants at a single site - as contrasted to construction at dispersed sites - presents an opportunity to achieve savings in terms of construction manhours and construction time, both of which result in dollar savings. This would be particularly true if the units are constructed on a planned program which takes into account the entire scope of site development from beginning to completion. There are multiple plants on single sites now in operation or under construction, such as the following:

Commonwealth Edison's Dresden Site - 1 single unit plus
1 dual unit:
1818 MWe Total

Philadelphia Electric's Peach Bottom Site - 1 single unit plus
1 dual unit:
2170 MWe Total

Tennessee Valley Authority's Brown's Ferry Site -
3 units
3296 MWe Total

Tokyo Electric's Fukushima Site - 4 single units plus
3 "replicates"
4665 MWe Total

Although the sites were chosen anticipating that additional units would be added to the initial unit, the plants at these sites differ in rating, type, or both, and the normal process of site development has precluded the kind of planning that is possible at a power park.

It is anticipated that savings can be achieved in some or all of the following areas:

1. Site evaluation and selection.

2. Safety and licensing.

3. Work load and work force stability.

4. Improved worker productivity through replication -

"learning curves".

5. Optimization of construction facilities.

6. Application of novel construction techniques.

Items 1, 2, 3, and 4 are addressed to in other sections of this report. Discussed herein are the last two of the above items: economies that are possible by "prefabricating", and preassembling, in effect as many of the structures and as much of the equipment as possible in specialized facilities located at the site. The term "modular construction" has been applied to this approach but the generic term "modular" has been applied to many designs, arrangements, procedures, etc., and has many interpretations.

Basically the approach is to divide the total plant into the largest pieces - structural, mechanical, electrical, and combinations of these - that can be preassembled and set in place as the buildings progress. This technique has been used for the construction of chemical and petrochemical plants in locations where construction labor is scarce and where climatic conditions are severe, e.g., Lake Maracaibo, Venezuela; Port Valdez, Alaska; Cook's Inlet, Alaska; Edmonton, Alberta.[33, 34] The same approach is applicable to the construction of generating plants in a power park where the large number of units and the large amount of required labor can justify the cost of specialized facilities to fabricate and handle large subassemblies. The common denominator is the design of large modules capable of being constructed individually, transported, and assembled into a complete plant. In the power park concept, the opportunity to locate fabrication facilities nearby makes it possible to utilize transporters, special cranes, and other means of material handling to a great extent.

As a means of evaluating the potential savings using modular construction, a study was made of the time and facilities required to construct typical LWR power plants under two sets of conditions:

(1) A single unit built using conventional construction procedures at a typical site.

(2) A single unit built as a part of a planned power park complex using large construction modules.

As a sub-case under (2) above, an additional study was performed to evaluate the possible savings that might result from the substitution of steel and water for concrete as a shielding material.

The reference plant used in these studies is described next, followed by discussion of conventional construction techniques and a typical resulting construction schedule. Then the evaluations of modular construction are presented, together with copies of the subcontractor studies in Appendices 4. A1 and 4. A2.

4.11.2 Reference LWR

4.11.2.1 REFERENCE LWR REACTOR BUILDING. The reference LWR plant selected for evaluation is a 1220 MW plant utilizing a BWR with an output of 3800 thermal megaWatts, a containment utilizing water as the means of energy absorption, an 1800 rpm turbine generator taking steam at 985 psi and discharging into 2 inches Hg vacuum, and all the auxiliary systems and buildings associated with these two major components. The 1220 MW plant was picked because of the large amount of technical information available. The reactor plant and associated systems and buildings is described in detail in the General Electric Standard Safety Analysis Report[35] currently on file in the NRC Document Room. The turbine plant and associated systems and buildings are described in the Braun Safety Analysis Report[36] currently also on file in the NRC Document Room.

The overall arrangement of the reactor complex or nuclear island is shown in Figures 4-58, 4-59, and 4-60. The central reactor building contains the reactor itself; steam, feedwater, and emergency cooling system piping and valves; associated smaller piping systems; pools to accommodate fuel transfer; reactor recirculating pumps and valves; primary and secondary shielding; a composite containment structure immediately surrounding the reactor, called a drywell; water for the pressure suppression pool; a larger steel containment vessel encompassing all the aforementioned components; and a secondary reinforced concrete building surrounding the steel containment vessel, serving both as a secondary containment vessel and as a shielding structure. This arrangement is referred to as Mark III containment and is described in greater detail in References 37 and 38. The reactor building also houses hydraulic control units for the control rod drives, heat exchangers for the reactor water cleanup system, heating, ventilating and cooling equipment for the reactor building; and miscellaneous electrical and mechanical components associated with the components mentioned above. Figures 4-61 and 4-62 show the containment building and its contents.

The structures that dominate this design are the reactor pedestal and reactor shield wall, the drywell and upper pools, the steel containment vessel, and the shield building. These rest on a reinforced concrete base mat which may be up to 15 feet thick depending on soil

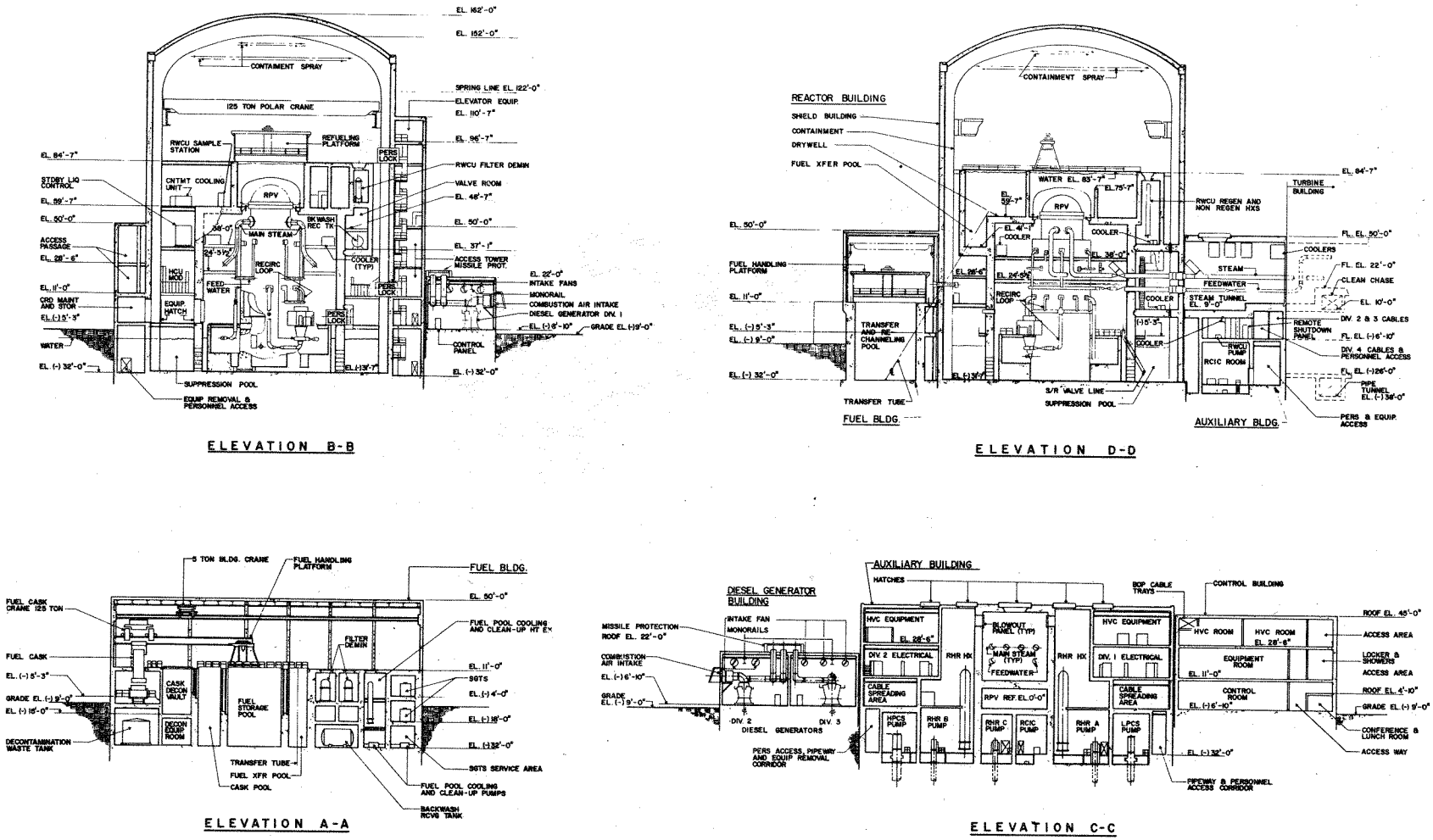

Figure 4-58 General Arrangement LWR Plant - Elevations

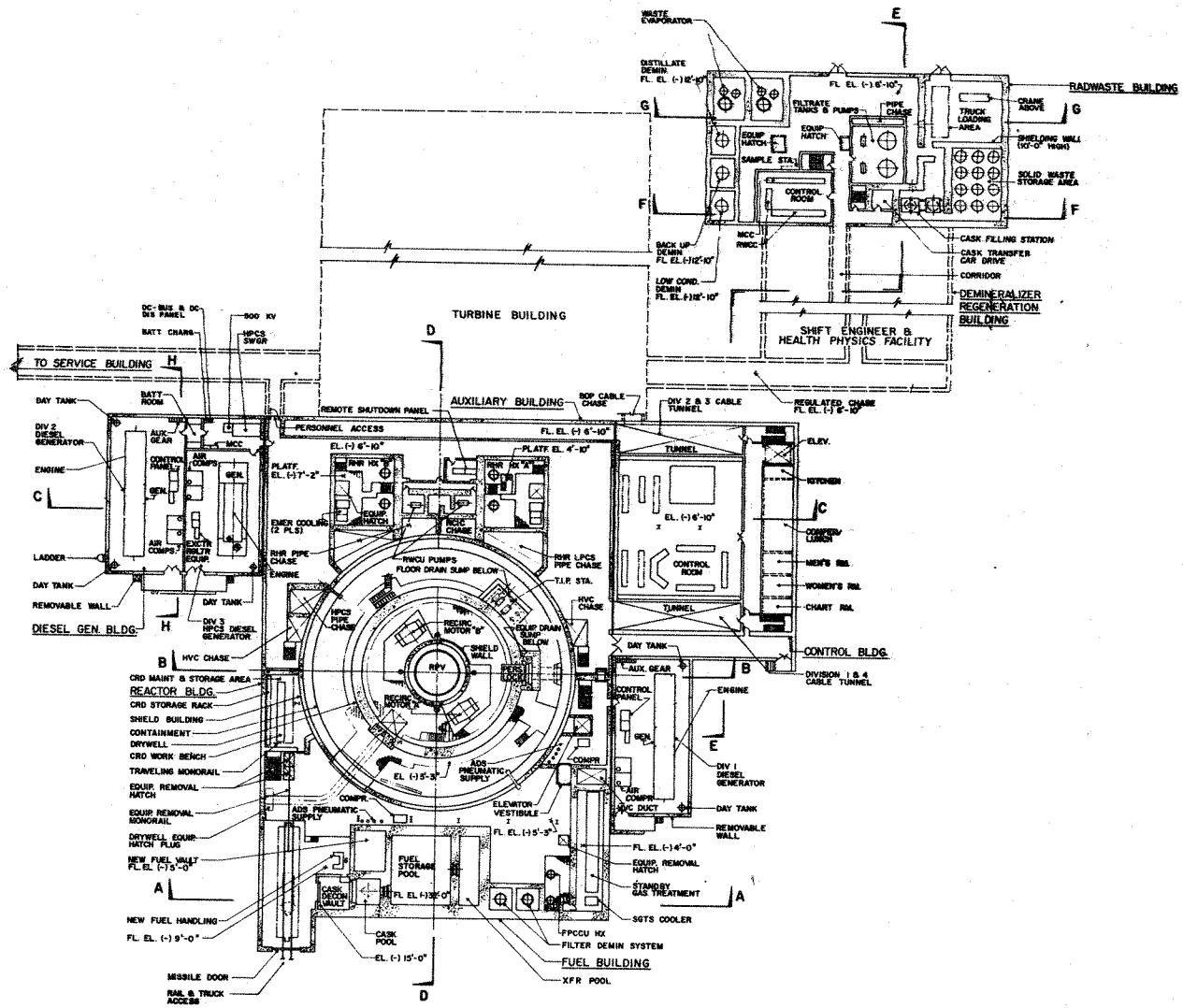

Figure 4-59 General Arrangement LWR Plant - Plan at - 32 Ft.

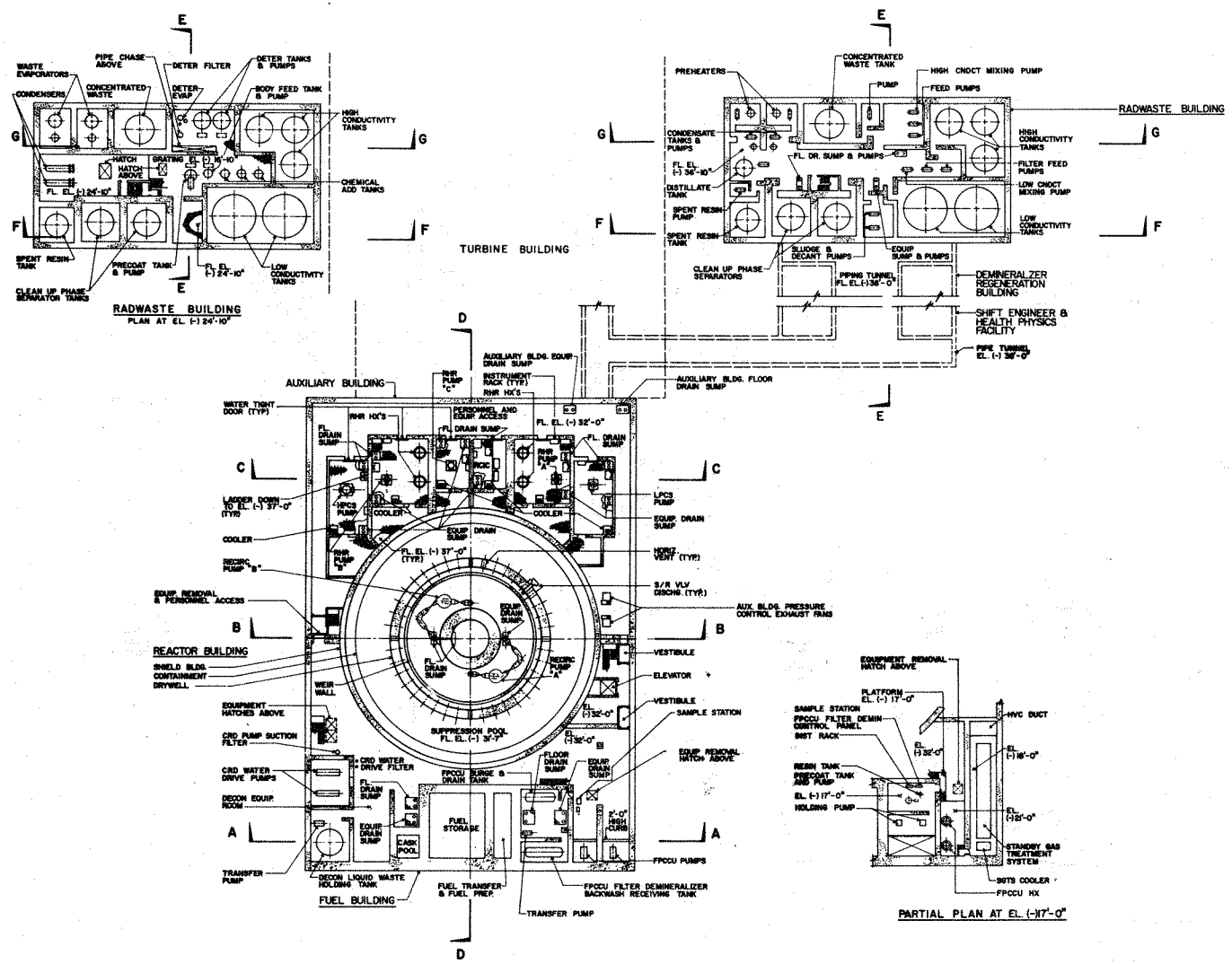

Figure 4-60 General Arrangement LWR Plant - Plan at 6 Ft. 10 In.

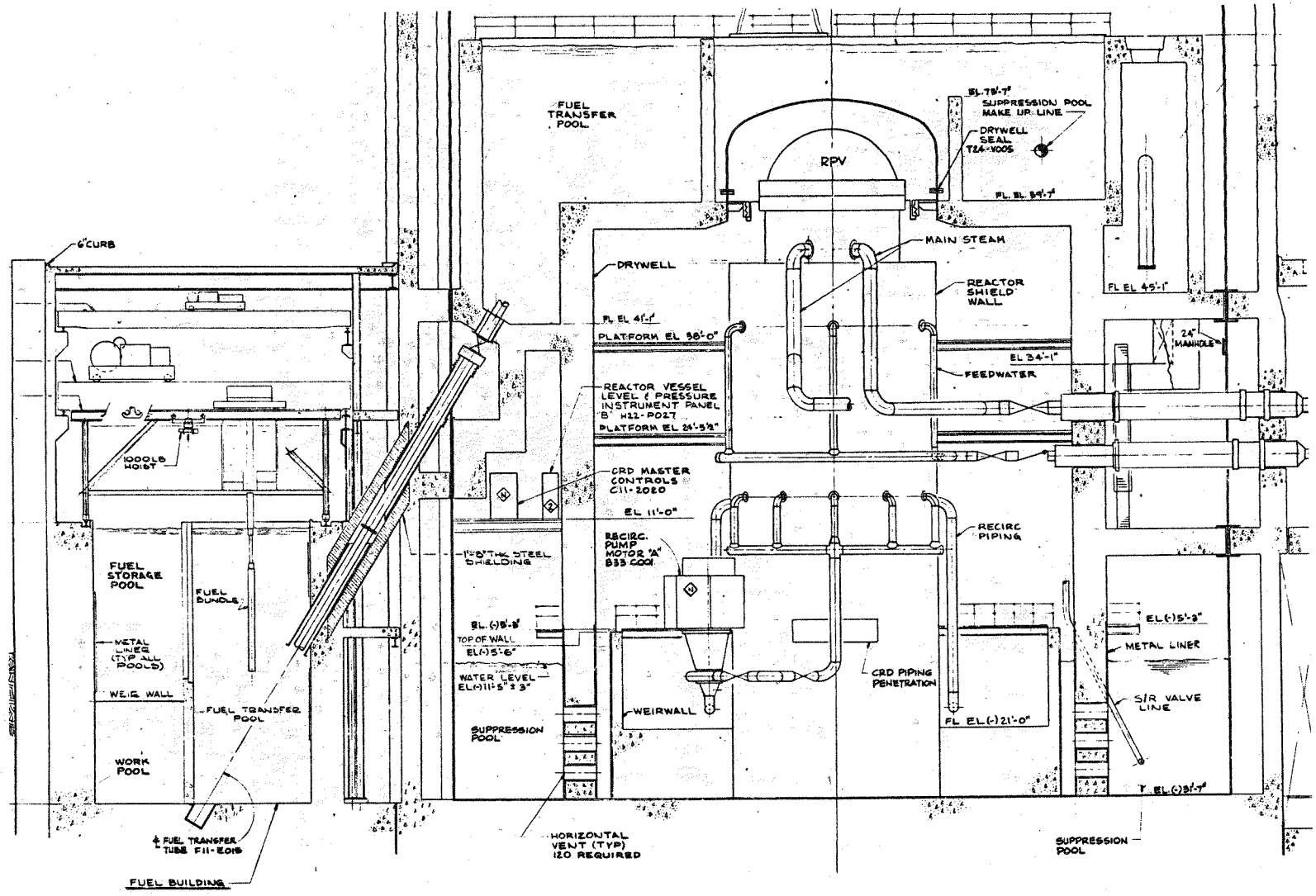

Figure 4-61 Section of LWR Plant - Looking "North"

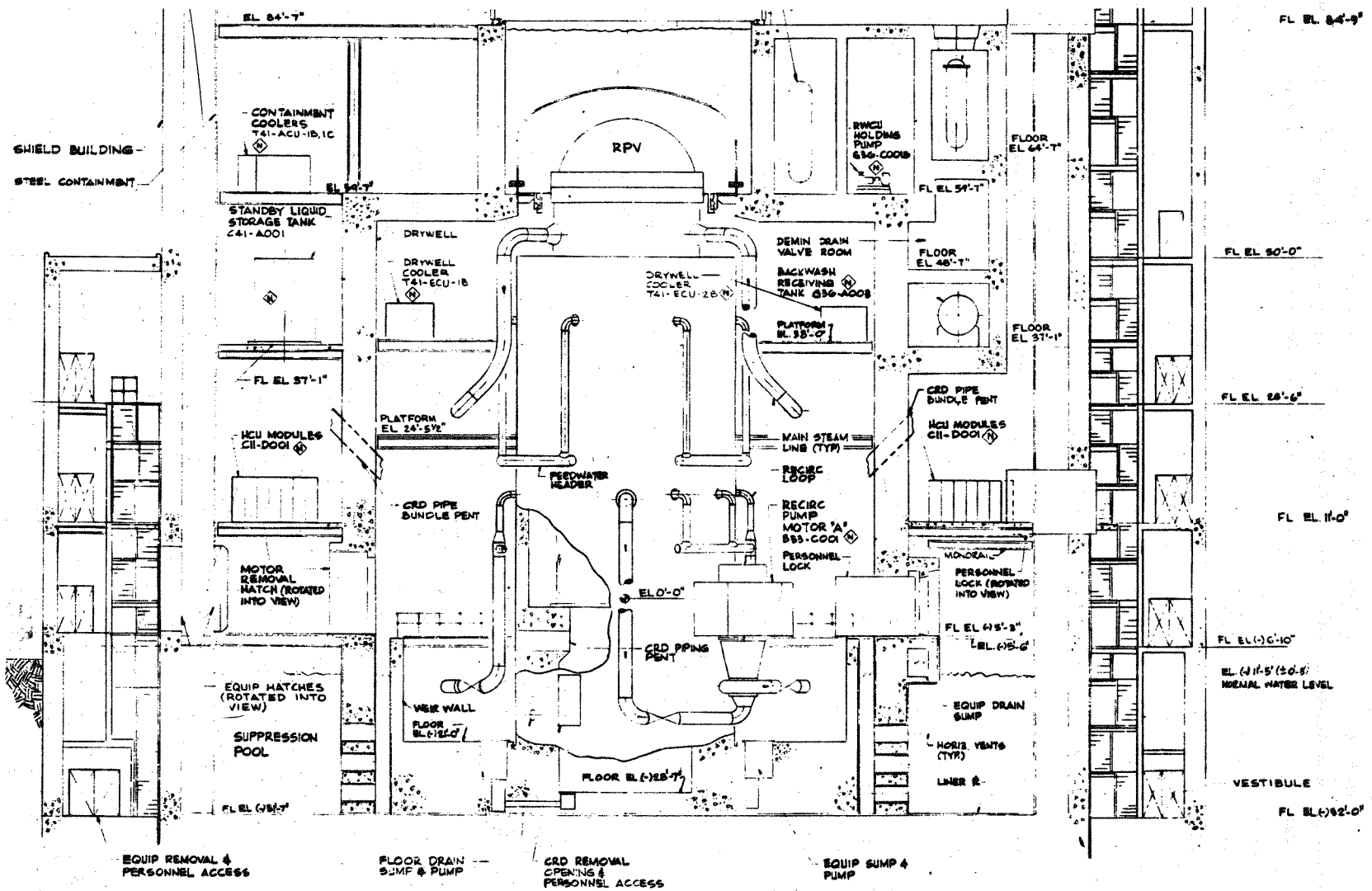

Figure 4-62 Section of LWR Plant - Looking "East"

conditions. The drywell is a reinforced concrete structure designed to contain the maximum instantaneous pressure differential produced by a postulated line break (about 22 psi) and to support itself and the upper pools under a simultaneous earthquake. The cylindrical walls of the drywell are 74 feet in diameter and have a thickness of approximately five feet. The suppression pool is sized to absorb the stored energy in the reactor system plus core decay heat during the period required to bring emergency cooling systems into operation after a postulated accident.

The steel containment vessel is designed to contain the pressure produced by this sequence of events (and others) and has a design pressure of 15 psid. This requirement plus the required seismic criteria results in steel plate thicknesses which vary with height but are a maximum of approximately 1-3/8 inch. The structure is erected by welding preformed plates and with this wall thickness post-weld heat treatment is not necessary. The outer shield concrete building has three-feet thick cylindrical walls, the thickness being determined by post accident shielding considerations and by seismic strength requirements. The shield building is approximately 140 feet in diameter.

4.11.2.2 REFERENCE LWR AUXILIARY BUILDING. The reactor building is flanked on one side (arbitrarily called north) by the auxiliary building and on the opposite side by the fuel building. The auxiliary building is a concrete structure that contains a shielded tunnel through which run the steam and feedwater lines, compartments containing the shutdown and emergency reactor cooling systems, rooms which house HVAC (heating, ventilating and air conditioning) equipment, electrical switchgear, and components associated with these systems. The reactor cooling systems in the auxiliary building are the following:

RCIC (Reactor Core Isolation Cooling). A turbine driven pump which supplies make-up water to the reactor when the reactor is isolated from the main reactor feed pumps. The turbine is driven by steam taken directly from the reactor and the pump can take its suction from the suppression pool, so that the system can operate with the reactor isolated from the main condenser.

RHR (Residual Heat Removal) A, B, & C. This group of systems performs a number of functions, including the following:

a) Removal of heat from the reactor when it is isolated from the main turbine generator condenser.

b) Removal of heat from the suppression pool after any event which

discharges reactor steam to the suppression pool.

c) Injection of water directly into the reactor core if a series of failures makes this necessary.

d) Supplying water to the containment spray in order to maintain containment temperature (and therefore, pressure) if a series of events makes it necessary.

The RHR system is comprised of pumps, heat exchangers, piping, valves, etc. located in separated compartments and designed mechanically so that no single failure can incapacitate all of these systems simultaneously.

HPCS (High Pressure Core Spray). This system, comprised of an electrically driven pump, piping, and valves is an emergency cooling system that can spray water into the core at the maximum pressure that can be developed in the reactor, taking water either from the condensate storage tank or the suppression pool. The pump and its associated piping and valves are located in a separate compartment and the system is designed hydraulically, mechanically, and electrically so that no single failure can incapacitate this sytem simultaneously with any other emergency core cooling system.

LPCS (Low Pressure Core Spray). This system is also comprised of an electrically driven pump, piping, valves, etc. and can spray water into the core to provide emergency cooling after the reactor pressure has decreased following a postulated loss-of-coolant accident. It also is located in a separate compartment and it too is designed so that no single failure can cause it to be incapacitated simultaneously with another emergency system.

These systems, their interaction, and many of the design criteria are described in greater detail in Chapters 6 and 15 of the General Electric Standard Safety Analysis Report[35]. They are summarily described here because the requirement that they be independent and redundant impacts their design throughout, their arrangement, and therefore the configuration and cost of the entire plant. The principle of "separation" is carried from the reactor vessel itself through the piping, through the systems, the equipment, and the sources of power and control for those systems. This principle is particularly well illustrated in the auxiliary building.

4.11.2.3 REFERENCE LWR FUEL BUILDING. The reactor building is flanked on the south side by the fuel building, which houses pools for

the fuel transfer, inspection, and storage; pools and equipment for loading and unloading fuel transfer casks; a system to maintain the required temperature and purity of water in these pools; the supply pumps for the control rod drive system, and miscellaneous equipment associated with these systems. The fuel building is equipped with a 125 ton capacity crane for handling the fuel transfer casks, a fuel handling platform, and several smaller cranes for fuel handling in the pools.

The fuel building is predominantly the concrete structure required to form and support the pools, provide additional shielding for fuel being stored and handled, and to house and shield the pool water clean-up and cooling equipment.

4.11.2.4 REFERENCE LWR DIESEL GENERATOR BUILDING. Emergency diesel generators are located in two areas: two in the "diesel generator" building located adjacent to and west of the auxiliary building, and one adjacent to and southeast of the reactor building. Their function is to provide electric power to all of the emergency systems (cooling, control, instrumentation, etc.) in the event that the plant itself is shut down and no outside source of power is available. In the diesel generator building, the Division 2 generator supplies power to the RHR B and C systems; the Division 3 generator supplies power only to the HPCS system. The Division 1 generator is located alongside the reactor building, and supplies power to the RHR A and LPCS systems. This arrangement is to provide a maximum of physical separation between sources of emergency power consistent with the "independent redundant" criteria for systems called on to function during emergency conditions.

The diesel generators together with their control systems, and a portion of the fuel supply are housed in concrete structures. These structures have no shielding requirements; therefore, wall and roof thicknesses ($\sim$ 2 ft) are determined by structural considerations, including seismic, plus the requirement that the structures not be penetrated by debris produced and propelled by tornado winds.

4.11.2.5 REFERENCE LWR RADWASTE BUILDING. The radwaste building is located adjacent to and west of the turbine building. It is a concrete structure housing the equipment which processes all of the water from the plant which contains radioactive material. The equipment includes pumps, piping, tanks, evaporators, filters, and the associated electrical and control equipment.

The major input to the radwaste system is resins from the reactor water cleanup system, the fuel pool system, and the condensate cleanup

system. The first two contain activated corrosion products and fission products and their decay daughters. Input from the condensate cleanup system to radwaste is predominantly the daughters from noble gas fission product decay. The overall system is designed, in effect, to separate all radioactive solids from the water, return the water to the primary coolant system, and to accumulate the solids in shippable drums so that there is no significant discharge of radioactive material to the environment at the plant site.

4.11.2.6 REFERENCE LWR TURBINE BUILDING. The Braun turbine building is a standard design[36] engineered to be used with the General Electric boiling water reactor (238 in. BWR/6) and standard reactor island.[37] The turbine building design includes the building itself and all equipment, components, and systems within the building.

The turbine building is a reinforced concrete and steel structure 238 feet long by 135 feet wide. The basement level is at -24 feet, the operating floor at 50 feet, and the roof at 114 feet. The building is arranged with the long axis radial to the reactor island. One end of the turbine building abuts the auxiliary building and connects to it with a continuous steam tunnel.

The turbine generator is located at the operating floor level. The turbine is a tandem compound, six flow unit with one high pressure and three low pressure sections. The generator, rated at 1250 MW, is directly coupled to the turbine.

The main condenser is a three shell, multi pressure unit extending from the basement level to the turbine exhaust hoods. Tube axis is transverse to the turbine axis.

The condenser off-gas system consists of vacuum pumps, two stages of steam jet air ejectors, condensers, recombiners, gas cooler, charcoal adsorbers, and filters - all located at the basement level or the first floor above.

The condensate and feedwater system comprises all equipment needed to pump, heat, and condition condensate as it flows from the hot well through the last heater. Pumping is effected through three stages - condensate pumps, booster pumps, and feedwater pumps. Eash stage consists of three parallel pumps. The boiler feed pumps are steam turbine driven. All others are electric motor driven. The heating cycle includes six stages of exchange. The exchangers for the three low stages are mounted in the condenser necks. The fourth stage is a deaerating heater located at the operating floor with the storage

section immediately below. The fifth and sixth stage heaters are vertical shell and tube exchangers. Deep mixed bed demineralizers are provided for full-flow condensate polishing.

The various auxiliaries for regeneration of the demineralizer resins are located at the 16 feet floor elevation. These include the regeneration vessels, caustic and acid tanks, hot water tank, ultrasonic resin cleaner, and the necessary pumps. Also at this level are the lube oil reservoir, the hydraulic power unit for the turbine control and bypass valves, the isolated phase bus ducts and the bus cooler.

At the -4 feet elevation are the hydrogen analyzer and offgas sampling system. Here too are most of the offgas auxiliary equipment such as the glycol cooler, the offgas heat exchangers, and the recombiners. A rail track spur enters the turbine building at this level.

At the basement level -24 feet elevation, are the closed cooling water pumps, heat exchangers, chemical treatment tank, and surge tank. Here too are the auxiliary electric heated boiler, services and instrument air compressors and receivers, and the condensate transfer pumps.

Various electrical components are included in the turbine building in addition to power and control cable systems. These include the 250 volt battery for loads outside the nuclear island, the 6900 volt switch gear, and the 480 volt switch gear and motor control centers for loads within the turbine building.

All air conditioning fan coil units and exhaust fans are mounted on the roof top. The water chillers and circulation pumps are located at the basement level.

4.11.2.7 REFERENCE LWR MISCELLANEOUS BUILDINGS. Other buildings and areas in the overall plant include administration buildings and offices shops, storage areas, the condenser cooling water intake and discharge structures, spray ponds or cooling towers (if used) and the plant switchyard. These are not considered to be candidates for significant innovation insofar as construction techniques are concerned, and are not treated in the course of the studies undertaken nor discussed.

4.11.3 Current LWR Construction

4.11.3.1 EVOLUTION OF CURRENT LWR CONSTRUCTION. The techniques involved in the design and construction of today's nuclear power plants have developed over the past twenty-five years, growing out of and

drawing on practices used in the construction of other industrial plants; predominantly chemical processing plants and fossil fueled electric generating plants. Piping, electrical and control systems, and, for the most part, structures in LWR plants are similar in nature and complexity to their counterparts in processing and generating plants built throughout the world using well established construction techniques and utilizing components available from existing industries. Possibly containment buildings do not have a direct counterpart in non-nuclear plants; structures to minimize or contain the energy released in accidents have been utilized in the explosives industry, but the first application of a large leak tight structure designed to contain an accidental energy release was the Horton sphere used to house a submarine prototype plant in West Milton, N. Y.

The feasibility of this concept lead to the development of "dry containments" used in the early plants (Shippingport, Dresden I, and Indian Point) and in subsequent larger plants. Containment concepts using water or ice for energy obsorption to minimize the containment design pressure have been developed and constructed. However, all containments, whether "dry" or "wet" are constructed of concrete (reinforced, post tensioned, etc.) or of steel plate preformed in the fabricator's shop and assembled at the construction site. No novel construction techniques are required to construct containment buildings currently designed, and none have been developed.

Nuclear plants require substantial quantities of shielding material around sources of high radiation - the reactor pressure vessel, steam generators (in PWR's) and portions of the steam system (in BWR's). Reinforced concrete has been widely used for this purpose for reasons of economy. In plant arrangement design, equipment is usually located so that shielding concrete whereever possible is utilized as load carrying walls and floors whose thickness (as much as five feet) is often determined by shielding rather than structural requirements. It has been expedient and economical to pour this concrete into site prepared forms in the manner that is used for the construction of foundations for turbine generators and other heavy machinery.

As the industry developed, nuclear plants have "inherited" many of the attributes of their ancestors, both good and bad. Some of these are identified below as they relate to the problems of efficiently and economically constructing a power park comprised of a large number of nuclear generating plants.

1. Like most complex plants, no two are identical. No two sites have identical conditions of terrain, soil, meteorology, cooling

water temperature and availability, etc. - these factors, plus specialized customer requirements, plus the continuing effort to achieve a more "optimum" arrangement, plus the continued escalation of safety requirements, produce the result that each plant has been custom designed and custom built using traditional construction techniques and procedures, and most are basically built one at a time. These are some of the undesirable consequences:

- There is neither the opportunity nor the incentive to develop specialized tools and facilities at any construction site;

- There is essentially no opportunity to seek some optimum split between construction/erection within the plant buildings and prefabrication in some more efficient facility;

- Engineering and design are redone for each plant. Costs associated with engineering and design amount to 8% or more of the total for a nuclear plant, and are increasing.[39]

2. The pattern is basically that of constructing buildings, installing equipment and piping, and then completing the required electrical and control work. This is fundamentally sequential, and results in construction schedules that are difficult to shorten. In addition, the large amount of work which must be completed in confined areas results in worker congestion and reduced productivity in many areas such as containment buildings, auxiliary buildings, and other shielded areas.

3. In order to shorten total project schedules, detail design work usually is continued well into the construction period, with electrical usually being the last to be completed. This frequently results in additional congestion in areas containing cableways, delays the procurement and delivery of cables, with the end result that electrical work is often the limiting item in project completion.

Trends in the nuclear power industry have tended to make these problems more acute. The average capacity of the plants contracted for domestically in 1955 and 1956 was 210 MW; this increased to 565 MW in 1963, 820 MW in 1966, and 1180 MW in 1974. From a technical viewpoint, higher ratings can be expected in the future when larger single shaft turbine-generators become available or when the economics of multiple shaft machines can be demonstrated.

In addition to increasing in rating, nuclear plants have increased in complexity and sophistication. This has not been matched by increases in building volumes; on the contrary, physical plant size as expressed in cubic feet per kilowatt (typically about 10 to 15 cu. ft. /KW) has remained essentially constant or decreased during the past decade.[39] Safety criteria requiring redundancy and independence of safety systems, stricter requirements for containment integrity, more severe seismic conditions, criteria for system separation, and more extensive quality assurance procedures and documentation have all added to the cost of nuclear plants as measured by dollars per kilowatt, construction man-hours per kilowatt, and project span time.[39, 40] Average elapsed time from construction permit to commercial operation for domestic plants increased from 60 months in 1970* to 83 months in 1973* and is projected to increase.[41]

4.11.3.2 CURRENT LWR CONSTRUCTION SCHEDULES. The foregoing discussion of typical dispersed nuclear power plants is intended to set a background for some evaluation of current design and construction procedures as relative to the power park concept. To evaluate the savings in plant construction costs that might be achieved using novel construction techniques, a typical construction schedule for a 1220 MWe plant using a BWR was taken as a reference against which other construction schedules could be measured. This is the Reference LWR described previously and by other references in this section. This "typical" schedule was developed using data from projects completed in the past and also from estimates for plants now under construction. Actual construction schedules vary widely, being influenced by site conditions, local labor supply, design changes, licensing delays, etc. and the required time for project completion is increasing.[13] The reference schedule allows 24 months for obtaining a construction permit and 60 months for actual construction, and is taken as an arbitrary reference for comparative studies in this section.

The overall schedule is shown in summary form in Figure 4-63. It indicates a time span of 60 months beginning with the issuing of a construction permit and ending with initial fuel loading. It is subdivided by major structure areas: reactor building, auxiliary building, fuel handling building, radwaste building, diesel generator building, control building, turbine building, and structures associated with the circulatory water system. It is assumed that all substantive site construction is started upon receipt of the construction permit, and two years is arbitrarily assumed between the time of filing a Preliminary Safety Analysis Report (PSAR) and receipt of the Construction Permit (CP).

* Year of commercial operation

SEQ. NO.	ACTIVITY NUMBER			S	D-PRD SEQ.	D-SUC SEQ.	DUR
		LICENSING	AA10				
1	100	CONSTRUCTION REPMIT	AA10	B		2	104.0
		REACTOR BLDG	BXXX				
2	105	MOBILIZATION + SITE PREPARATION	AB B105		1	3	26.0
3	110	EXCAVATE FOR REACTOR BLDG	AB B110		2	4	13.0
4	115	F.A.P. AB BASE MAT + INSTL EMBEDMENTS	AB B115		3	5	17.4
5	120	INSTALL FLOOR LINER	AB B120		4	6	8.6
6	125	F.A.P. DRYWELL WALL	AB B125		5	10	21.6
7	130	ERECT + POUR RPV PEDESTAL	AB B130		5	8	8.6
8	135	ERECT REACTOR SHIELD WALL STEEL	AB B135		7	15	8.6
9	145	MOVE IN RECIRC PIPING	AB B145		6	16	8.6
10	150	F.A.P. ROOMS BELOW 45m	AB B150		6	15	13.0
11	155	SETUP, SLIP FORM,+STRIP OUTER SHIELD WALL	AB B155		6	40	10.0
12	160	ERECT WIER WALL,POUR WALL + SLAB AT -21FT	AB B160		6	15	10.0
13	165	CONTAINMENT VESSEL TO SPRING LINE	AB B165		11	17	26.0
14	180	ERECT BEAMS,RESTR STL + PLTFMS IN DRYWELL	AB B180		12	16	21.0
15	140	SET EQUIPMENT-TANKS,PUMPS,+ COOLERS	AB B140		10	18	28.4
16	170	INSTALL REACTOR BLDG PIPING	AB B170		15	31	121.0
17	172	INSTL PENETRATIONS	AB B172		13	16	17.4
18	175	INSTALL ELECTRICAL IN REACTOR BLDG	AB B175		13	31	121.6
19	185	F.A.P SLAB AT 59FT-7IN	AB B185		15	20	15.0
20	190	F.A.P WALLS + RWCU ROOMS ABOVE +45FT	AB B190		19	21	15.0
21	195	F.A.P REACTOR OPERATING FLOOR AT 84FT	AB B195		20	23	13.0
22	200	WELD POOL LINERS + TEST	AB B200		21	31	39.0
23	205	ERECT LIFTING RIG	AB B205		21	25	6.0
24	230	INSTALL HVAC	AB B230		16	32	40.0
25	210	SET + ALIGN RPV + REMOVE LIFTING RIG	AB B210		23	26	6.0
26	215	INSTALL REACTOR BLDG CRANE	AB B215		25	27	8.6
27	220	CLOSE UP CONTNMT WALL + COMPLETE STL DOME	AB B220		26	29	26.0
28	225	CLOSE UP CONSTR OPNG IN SHIELD WALL	AB B225		27	30	13.0
29	235	PRESSURE TEST CONTAINMENT	AB B235		27	30	1.0
30	240	COMPL CONCRETE SHIELD BLDG DOME	AB B240		29	32	13.0
31	245	RPV + SYSTEMS HYDRO	AB B245		16	32	1.0
32	250	PREOP TEST PROGRAM	AB B250		31	104	43.0
33	255	FUEL LOAD	AB B255		32	34	4.2
34	260	START UP + POWER TEST	AB B260		33		21.6
		REACTOR AUX BLDG	CXXX				
35	300	EXCAVATE FOR AUX BLDG	AAB C300		2	36	13.0
36	305	CONSTRUCT PUMP CAISONS	AAB C305		35	37	13.0
37	310	F.A.P. REACTOR AUX BLDG BASE MAT	AAB C310		4	38	17.4
38	315	F.A.P. OUTER WALLS TO GRADE	AAB C315		37	40	21.0
39	320	FAP STEAM TUNNEL STRUCTURE W/O ROOF	AAB C320		11	17	26.0
40	325	COMPL OUTER WALLS + FAP INT WALLS + FLRS	AAB C325		11	42	47.2
41	350	INSTALL ELECTRICAL	AAB C350		40	48	121.0
42	345	INSTALL AUX BLDG PIPING + MECH	AAB C345		40	48	121.6
43	335	INSTALL RHR HX	AAB C335		40	42	8.6
44	330	INSTALL PIPING IN STEAM TUNNEL	AAB C330		17	47	58.2
45	327	F.A.P. ROOF EXCEPT STEAM TUNNEL	AAB C327		40	46	8.6
46	355	INSTALL HVAC	AAB C355		45	48	34.4
47	340	F.A.P STEAM TUNNEL ROOF	AAB C340		44	42	8.0
48	360	PREOP TEST	AAB C360		42	33	52.0
		FUEL HANDLING BLDG	EXXX				
49	400	EXCAVATE FOR FUEL BLDG	FHB E400		2	50	13.0
50	405	F.A.P. BASE MAT	FHB E405		4	11	17.4
51	410	F.A.P. OUTER WALLS TO GRADE	FHB E410		50	52	17.4
52	415	F.A.P. INTERIOR CONCRETE	FHB E415		11	53	47.2
53	420	MOVE IN GAS TREATMENT TANKS	FHB E420		52	54	4.4
54	450	INSTALL PIPING, MECHANICAL, + ELECTRICAL	FHB E450		53	60	94.6
55	430	INSTALL FUEL POOL LINERS	FHB E430		52	58	39.0
56	435	ERECT OUTER WALL TO ROOF	FHB E435		52	57	8.6
57	440	ERECT DECKPLATE + CRANES	FHB E440		56	59	13.0
58	425	INSTALL FUEL TRANSFER SYSTEM	FHB E425		55	54	17.4
59	445	ERECT ROOF	FHB E445		57	54	8.6
60	455	PREOP TEST	FHB E455		54	61	43.0
		(CONT)					

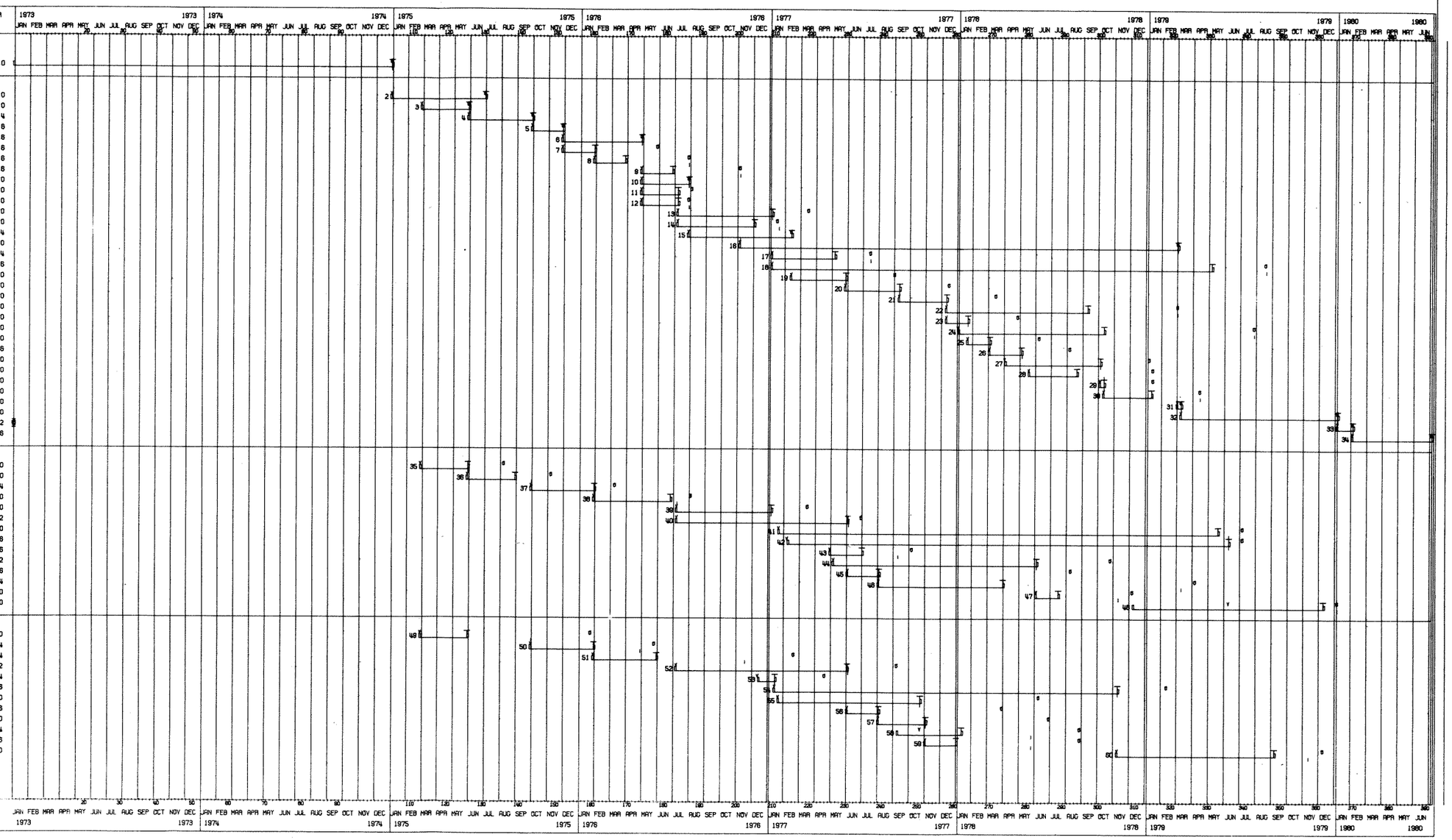

PAGE 1

Figure 4-63A Typical 60-Month LWR Construction Schedule

SEQ. NO.	ACTIVITY NUMBER			S	D-PRD SEQ.	D-SUC SEQ.	DUR
		FUEL HANDLING BLDG	EXXX				
		(CONT)					
61	460	RECEIVE & INSPECT FUEL	FHB E460		33	34	8.0
		RADWASTE BLDG	GXXX				
62	500	EXCAVATE FOR RADWASTE BLDG	RWB G500		2	63	13.0
63	505	F.R.P. RADWASTE BLDG BASE MAT	RWB G505		62	64	13.0
64	510	F.R.P. SUBGRADE INT&R WALLS TO -5FT-3IN	RWB G510		63	65	13.0
65	515	F.R.P. SUBGR EXT&R WALLS & TNK RM DIVIDERS	RWB G515		64	66	8.6
66	520	MOVE IN SUBGRADE TANKS & EQUIPMENT	RWB G520		65	67	4.4
67	525	F.R.P. SLAB AT -5FT-3IN	RWB G525		66	91	13.0
68	555	INSTALL SUBGRADE PIPING & EQUIPMENT	RWB G555		66	74	82.2
69	530	F.R.P. WALLS TO +9FT-9IN & PIPE CHASE	RWB G530		67	72	8.6
70	590	INSTL CABLE TRAYS + CONDUIT	RWB G590		67	80	80.2
71	535	F.R.P. EXT&R & INT.WALLS TO +21FT-9IN	RWB G535		69	77	13.0
72	540	F.R.P. ROOF & SLAB AT 5FT-9IN	RWB G540		69	76	8.6
73	545	F.R.P. WALLS FROM 5FT-9IN TO 24FT-9IN	RWB G545		72	78	8.6
74	575	INSTALL EQUIPMENT & PIPING ABOVE GRADE	RWB G575		72	82	86.0
75	580	INSTL RADWASTE BLDG HVAC	RWB G580		72	82	65.0
76	585	INSTL CONTROL ROOM PANELS	RWB G585		72	80	26.0
77	560	F.R.P ROOF AT EL 21FT-9IN	RWB G560		71	74	8.6
78	550	F.R.P. SLAB AT EL24FT-9IN	RWB G550		73	79	6.0
79	565	F.R.P. WALLS FROM 24FT-9IN TO 44FT-3IN	RWB G565		78	81	8.6
80	594	PULL CABLES + TERMINATE	RWB G594		70	82	86.0
81	570	F.R.P. ROOF AT EL 44FT-3IN	RWB G570		79	74	8.6
82	598	PREOP TEST	RWB G598		80	33	43.0
		DIESEL GENERATOR BLDG	JXXX				
83	600	BACKFILL FOR DIESEL GENERATOR BLDG	DGB J600		38	84	8.6
84	605	F.R.P. DIESEL GEN BLDG BASE MAT	DGB J605		83	85	8.6
85	610	F.R.P. WALLS TO ROOF	DGB J610		84	86	8.6
86	615	F.R.P. ROOF & INSTALL DOORS & PANELS	DGB J615		85	87	8.6
87	620	INSTL DIESEL GENS & OTHER EQUIP	DGB J620		86	88	17.4
88	630	INSTL PIPING & ELECTRICAL	DGB J630		87	90	78.0
89	625	CLOSE UP CONSTR OPENING	DGB J625		87	90	17.4
90	635	PREOP TEST	DGB J635		88	104	43.0
		CONTROL BLDG	LXXX				
91	700	BACKFILL FOR CNTROL BLDG	CB L700		38	92	4.4
92	705	F.R.P. CONTROL BLDG BASE MAT	CB L705		91	93	4.4
93	708	F.R.P. WALLS TO EL 11FT	CB L708		92	94	8.6
94	710	F.R.P. FLOOR AT EL 11FT	CB L710		93	96	8.6
95	711	INSTL CABLE TRAY + CONDUIT	CB L711		94	104	94.6
96	713	F.R.P. WALLS TO EL 25	CB L713		94	97	8.6
97	715	F.R.P. FLOOR AT EL 25	CB L715		96	98	8.6
98	716	INSTL TERM CABINETS	CB L716		97	101	17.4
99	718	F.R.P. WALLS TO ROOF	CB L718		97	102	8.6
100	725	INSTL PIPING, MECH, HVAC	CB L725		102	104	52.0
101	717	PULL CABLE + TERM AT CABINETS	CB L717		98	104	86.0
102	720	F.R.P. ROOF	CB L720		99	103	8.6
103	722	INSTL PGCC + TEST	CB L722		102	104	26.0
104	730	PREOP TEST	CB L730		32	33	52.0
		TURBINE BLDG	NXXX				
105	800	EXCAVATE FOR TURBINE BLDG	TB N800		2	106	17.4
106	803	F.R.P. CENTER SECTION BASE SLAB	TB N803		105	109	13.0
107	810	F.R.P. DEMIN PIT BASE MAT	TB N810		105	108	4.4
108	813	F.R.P. DEMIN PIT WALLS TO GRADE	TB N813		107	111	8.6
109	805	F.R.P. CENTER SECTION WALLS & FLOORS	TB N805		106	119	30.2
110	815	F.R.P. DEMIN PIT SLAB AT GRADE	TB N815		108	114	8.6
111	818	F.R.P. CIRC WATER TUNNELS	TB N818		108	114	8.6
112	820	F.R.P. COND BSTR PUMP BAYS BASE MATS	TB N820		106	113	8.6
113	825	F.R.P. COND BSTR PUMP BAYS WALLS TO GRADE	TB N825		112	117	21.0
114	835	BACKFILL FOR CONDENSER ACCESS	TB N835		111	119	8.6
115	830	F.R.P. BASE MAT FOR FW HEATER BAY	TB N830		109	116	8.6
116	838	BACKFILL HEATER BAY TO MAT	TB N838		115	119	4.2
117	828	F.R.P. COND BSTR PUMP BAYS SUPERSTRUCTURE	TB N828		113	125	13.0
		(CONT)					

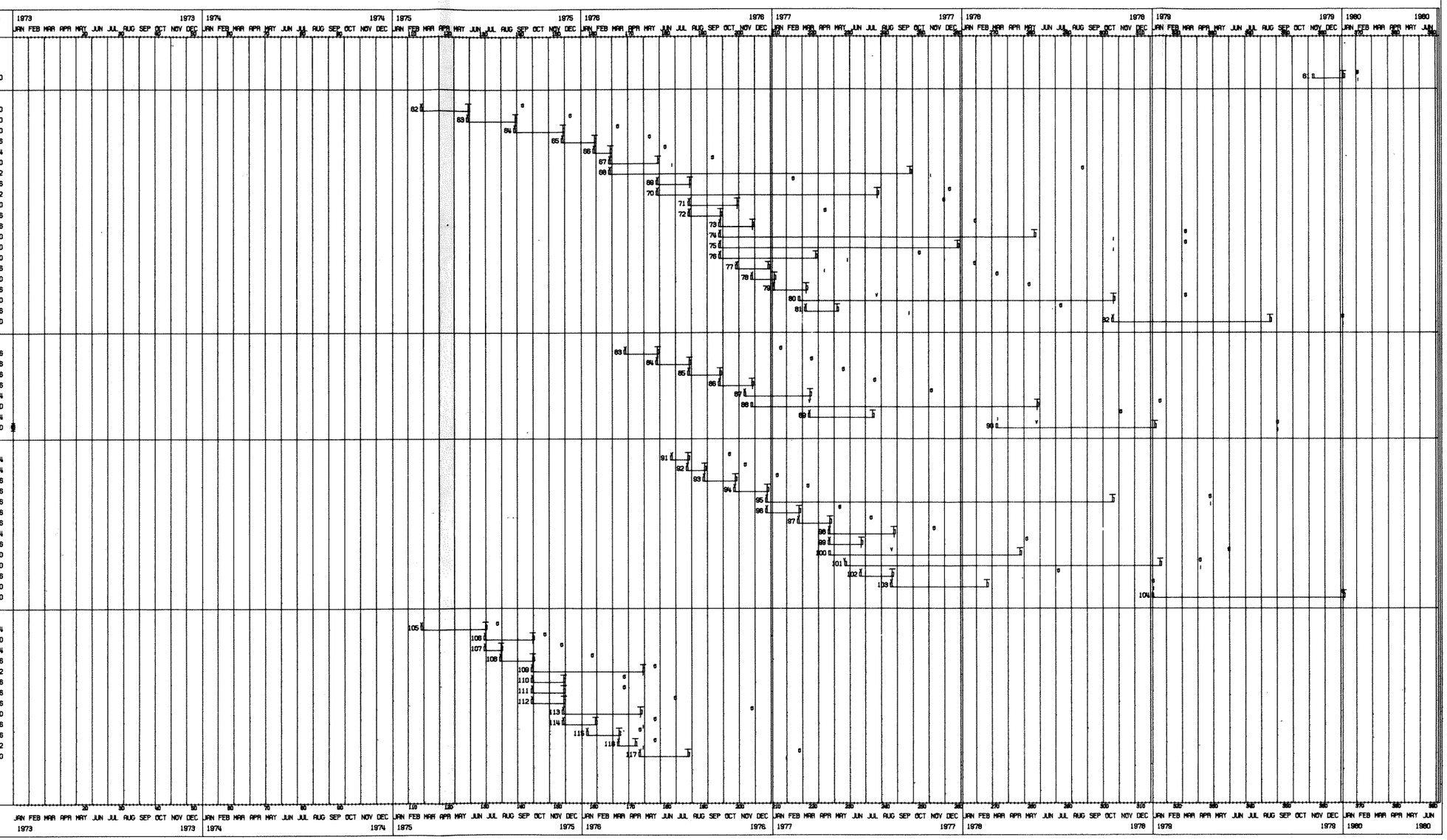

PAGE 2

Figure 4-63B Typical 60-Month LWR Construction Schedule

SEQ. NO.	ACTIVITY NUMBER			S	D-PRD SEQ.	D-SUC SEQ.	DUR
		TURBINE BLDG	NXXX				
		(CONT)					
118	808	ERECT SUPERSTRUCTURE	TB N808		109	124	26.0
119	840	CONDENSER LAYOUT + PREP WORK	TB N840		109	121	4.2
120	845	INSTALL CONDENSER HOTWELLS	TB N845		119	122	8.8
121	858	F.R.P. FW HEATER BAY WALLS TO GRADE	TB N858		119	123	8.8
122	850	INSTALL CONDENSER SHELLS	TB N850		120	126	13.0
123	860	F.R.P. FW HEATER BAY SUPERSTRUCTURE	TB N860		121	127	13.0
124	865	INSTALL TURBINE GENERATOR	TB N865		118	125	78.0
125	870	INSTALL EQUIPMENT + PIPING	TB N870		127	129	121.8
126	855	INSTALL CONDENSER TUBES	TB N855		122	125	30.2
127	868	INSTALL FW HEATERS + PIPING	TB N868		123	125	60.0
128	883	INSTALL OFFGAS SYSTEM	TB N883		118	131	78.0
129	875	INSTALL ELECTRICAL	TB N875		125	131	94.2
130	880	INSTALL HVAC	TB N880		125	131	47.0
131	885	TURBINE BLDG PREOP TESTS	TB N885		129	33	52.0
		CIRC WATER SYSTEM	QXXX				
132	900	EXCAVATE FOR CIRC WATER SYSTEM	CWS Q900		2	133	17.4
133	905	F.R.P. INTAKE STRUCTURE	CWS Q905		132	134	39.0
134	910	F.R.P. CIRC WATER TUNNELS	CWS Q910		133	138	26.0
135	915	INSTALL SERVICE WATER PIPE	CWS Q915		133	125	80.0
136	920	INSTALL MECHANICAL EQUIP + PIPE	CWS Q920		133	139	98.0
137	925	INSTALL ELECTRICAL	CWS Q925		133	125	90.4
138	930	F.R.P. OUTFALL STRUCTURE	CWS Q930		134	125	78.0
139	935	PREOP SERVICE WATER	CWS Q935		136	131	26.0

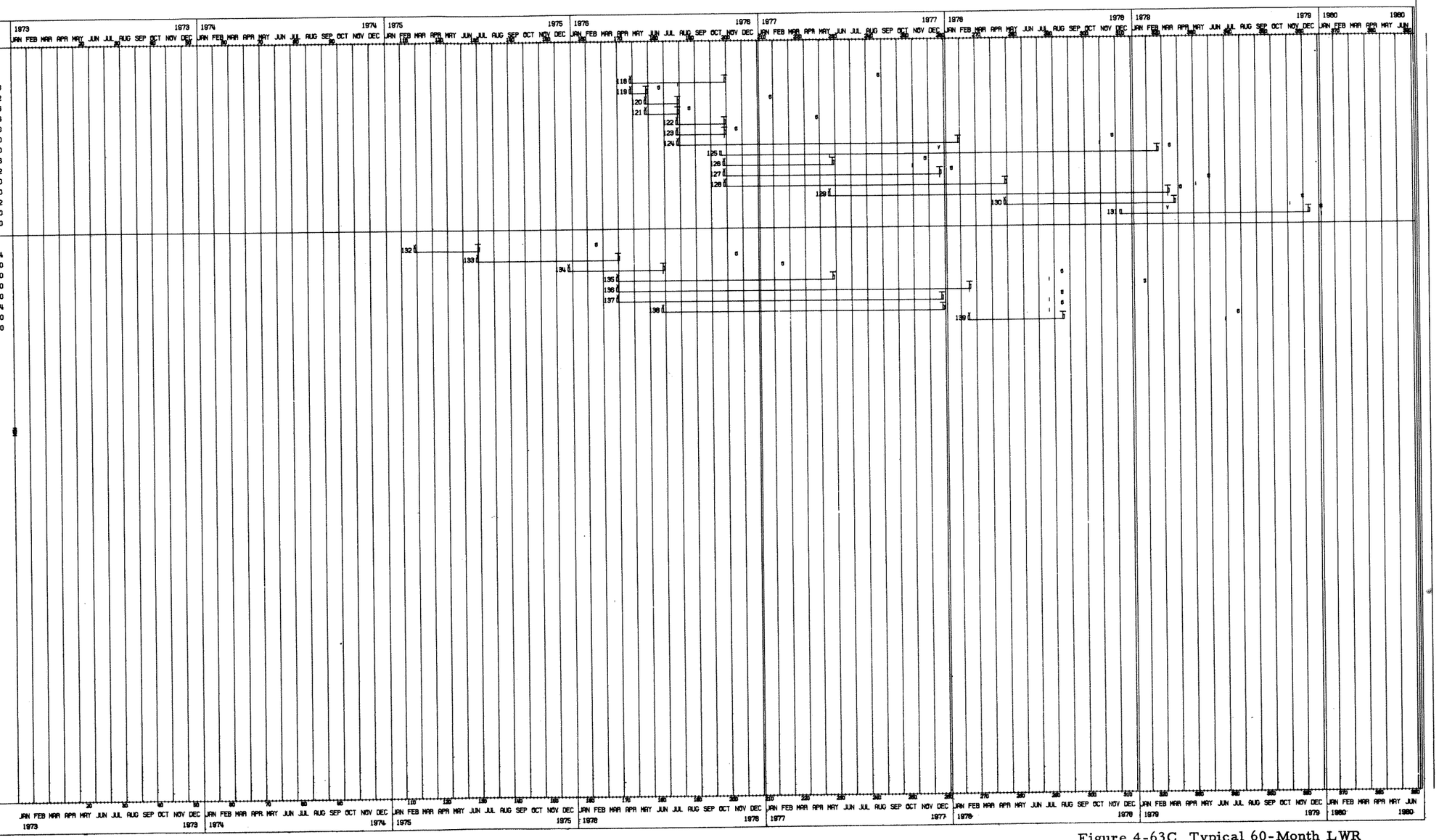

PAGE 3

Figure 4-63C Typical 60-Month LWR Construction Schedule

Approximately eight weeks after receipt of the Construction Permit, site preparation has proceeded to the point that excavation for the major buildings can be started (Sequences #3, 35, 49, 62 and 105). Construction of the condenser cooling water system is started concurrently. This system, the radwaste building, the diesel generator building, the fuel building, and the control building are usually not limiting items; they can be completed on a schedule that makes the most efficient utilization of resources at the site, and are not discussed further.

In all the buildings, after the foundations are completed, forms for walls and floors are built, rebar is placed, and concrete is poured, forming the buildings up to the point that the first major mechanical equipment can be installed. In the reactor building this is the recirculation piping, installation of which starts 71 weeks after construction starts. (Sequence #9).

Installation of other piping (Sequence #16) begins 96 weeks after start of construction and extends for 121 weeks. Similarly, the installation of electrical equipment and cable pulling (Sequence #18) begins about 104 weeks after start of construction and also continues for 122 weeks. These are large blocks of work, and are key items in determining the overall construction cycle.

Erection sequences for containments are "tailored" to fit the delivery of large pressure vessels, which in the BWR is the reactor pressure vessel. This is Sequence #25 and takes place in week #266 or 162 weeks after start of construction. This is also a key item in the schedule for several reasons: buildings must be left open or partially completed to receive the vessel; a substantial amount of piping and electricial work cannot be completed until the vessel is in place; and it is the largest lift that must be made. BWR vessels for plants in the 1220 MW range weigh approximately 900 tons at the time of installation, while PWR vessels weight approximately 500 tons. In BWR plants, this lift is accomplished by a special crane temporarily set up for this specific lift. Other components are skidded or are placed using construction cranes. Eight to ten of these are used at a construction site. After the building polar crane is installed (Sequence #26), it can be used for moving some equipment in the building, but this use is limited.

Construction of the auxiliary building follows a similar pattern. Forms for the foundation and walls are built, rebar is placed, and concrete poured carrying the building up to the point that it is ready to receive the first major components. These are the RHR heat exchangers (Sequence #43), which can be set about 123 weeks after start of construction. Installation of electrical, piping, and other mechanical equipment

can begin about 13 weeks prior to setting the heat exchanger. These include some major piping components, the completion of which requires that both the containment building and the auxiliary building be brought to this point simultaneously. Delay in either building puts that building on the critical path.

Construction of the turbine building follows a similar pattern. The predominate feature is, of course, the turbine generator and its foundation. After the base mat has been completed (Sequence #106) and walls have been poured (Sequences 108 and 109), the center section including the turbine generator pedestal is constructed (Sequence 118) and is completed in week 174, or 70 weeks after start of construction. Following this, the condenser hotwells (Sequence 120), the condenser shells (Sequence 122) and the turbine generator can be installed. Prior to this the turbine building walls and roof have been completed and the turbine building crane is installed (not shown). This crane (capacity about 220 tons) can be used for moving and placing components in the turbine building including turbine components. The generator stator, weighting about 650 tons, requires special rigging. Piping, other equipment, and electrical components are installed as areas become available. In most situations the turbine building is not limiting but it can become a critical path item if the auxiliary building delays the completion of interconnections to the turbine building.

The quantities of material required to construct a 1220 MW nuclear plant are a good measure of its size and complexity. These may vary considerably from plant to plant, as influenced by site characteristics, special features, cooling water supply, etc. However, the following values are representative of the material required to construct a plant using conventional techniques:

Concrete	100,000 yards
Rebar	13,000 tons
Structural Steel	4,600 tons
Misc. Steel	450 tons
Formwork	1,330,000 square feet
Piping, 2-1/2" and greater	96,000 linear feet
Piping, 2" and under	110,000 linear feet
Wire and Cable	2,150,000 feet
Conduit	250,000 feet
Cable Trays	27,000 feet
Wiring Terminations	110,000

Figure 4-64 shows a plant during construction. Visible are the structures described in the preceding paragraphs - the containment buildings

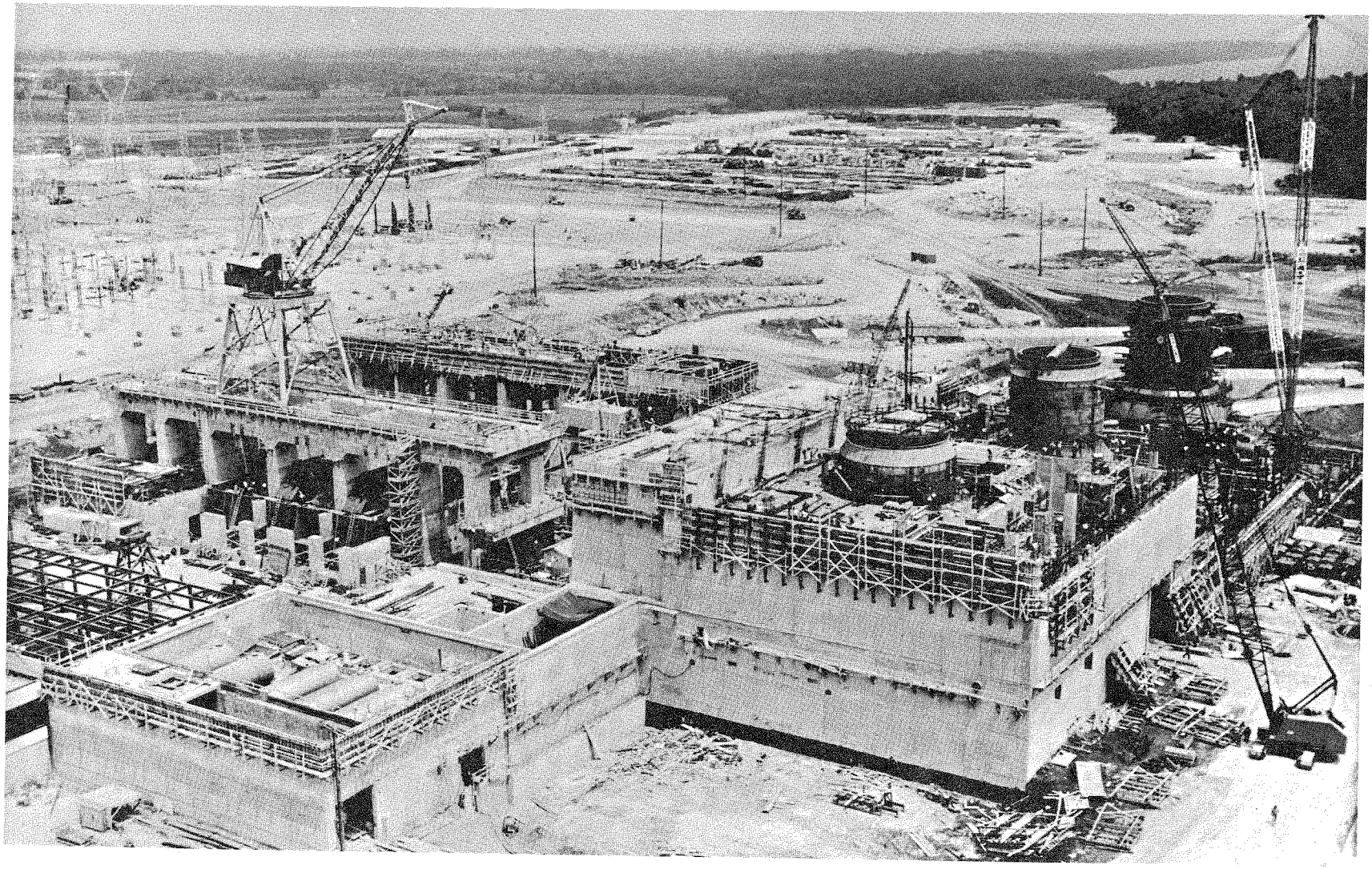

Figure 4-64 TVA Browns Ferry Reactors 1, 2, 3 During Construction

in the foreground, the turbine generator foundations in the background and other buildings in various stages of completion. The illustration is a three unit plant (the TVA Browns Ferry Plant) using a drywell torus type pressure suppression system and a steel containment structure, and in that respect it differs from the plant described in Section 4.11.2. However, it shows the dominant structures in a large LWR plant is illustrative of the conventional fabrication process.

4.11.4 Park Construction Assumptions

In order to obtain consistent bases for comparisons and to make maximum utilization of existing information, certain assumptions were made in the studies of novel construction techniques. These are as follows.

Transportation of manufactured components to the site is no more difficult than if conventional plant siting and construction procedures were used. Rail and highway transportation of turbine generator and other large equipment items is available. The complete reactor pressure vessel can be delivered to the site either by barge or by special transporter.

The site terrain and provisions for condenser cooling (coolant channels, ponds, spray towers, etc.) do not impose constraints on the location of units, fabrication and assembly facilities, and craneways.

Units are completed and placed in service at a rate of one per year. Construction is initiated on a schedule that will achieve this result.

Equipment, materials, and a labor force are available when required.

Labor productivity is representative of Chicago area construction.

The Reference LWR described previously is representative of LWR plants currently being designed and constructed and may be taken as a suitable case for analysis. It is recognized that variations in NSSS configuration and containment concepts result in design variations. However, plants using LWRs currently being constructed are sufficiently similar in overall size, quantity of materials used, construction techniques, construction span times, and cost so that BWR designs can be taken as representative for comparative study purposes.

Stated another way, the vagaries of site characteristics, schedule,

and other project unique factors have a greater influence on total plant cost than does the basic light water reactor type. Hence, either a BWR or a PWR plant could be taken as representative. The BWR was selected because of the availability of information to the authors.

The design of the turbine generator plant described previously in Section 4.11.2.6 is taken as representative of turbine generator plants currently being designed and built in LWR plants. Turbine plant design is affected by reactor type and by unique site and project requirements. However, this design has been developed as a standard for wide application, and should be adequate for comparison evaluations.

Each generating plant is essentially complete in itself, and all are assumed identical. Common facilities are limited to switching and transmission facilities, railroad roadways, water sources for condenser cooling, and administration and security facilities.

A gantry crane with a lifting capacity of approximately 1000 tons is available to move components from the preassembly areas and place them in the plants being constructed.

4.11.5 Modular Construction

In 1973, General Electric independently studied the construction of the key buildings in a nuclear power center using prefabricated components.[42] In this study approximately 100 modules making up the reactor building were identified. These are illustrated in Figure 4-65A, B, and C, which show the reactor building in various stages of completion. As a portion of this study performed for the National Science Foundation, C. F. Braun & Co. of Alhambra, California brought the study of the reactor, auxiliary, and fuel buildings up-to-date, and extended it to cover the radwaste, turbine, and control buildings. The Braun study identified approximately 500 modules making up the five additional buildings. This work also included a step-by-step evaluation of plant construction to evaluate the effect of using this construction method on total construction time. Results of this work are reported in Appendix 4.A1 of this Section, and are discussed in the following paragraphs.

As an additional portion of the study performed for the National Science Foundation, Nuclear Services Corporation of Campbell, California evaluated the feasibility of substituting steel and water for concrete in areas of the plant where shielding requirements are dominant. Results of the work are described in Appendix 4.A2 of this Section, and are discussed in the following paragraphs.

NOTES

1. The starting point of this sequence assumes a cast in place foundation for the buildings rather than a pre-fabricated foundation structure moved into place by transporter or barge.
2. Only major operations are included in this sequence. Installation of many small and miscellaneous equipment pieces and performance of many in-place operations for connections, closures, and finishing work are not defined.
3. Modular construction of the auxiliary building and fuel handling building will proceed in parallel with the reactor building construction shown hereon, beginning at Step 3. The auxiliary building erection sequence is shown on separate drawings.

STARTING POINT OF SEQUENCE

A. Reactor building foundation mat poured (5700 yds^3)
B. Lowest course of containment in place and anchored (400 tons)
C. Floor liner plates
D. Structure foundation plates
E. Reinforcing bar dowels for shield building walls

} Cast in place (170 tons)

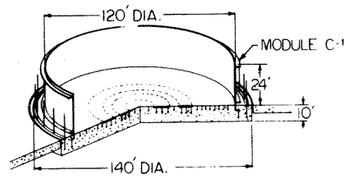

IN PLACE WEIGHT-11970 TONS.

Step 1. Install and anchor the reactor pedestal-weir wall steel frame (Module 1). Erect formwork and install reinforcement for shield building wall (below grade).

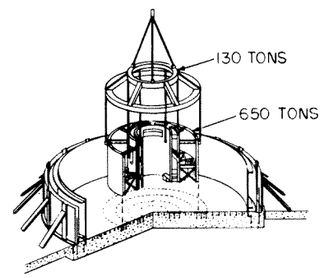

Step 2. Pump in and compact all concrete for the reactor pedestal-weir wall and drywell floors, and for shield building foundation wall. Prepare reactor vessel assembly (Module 2) for installation.

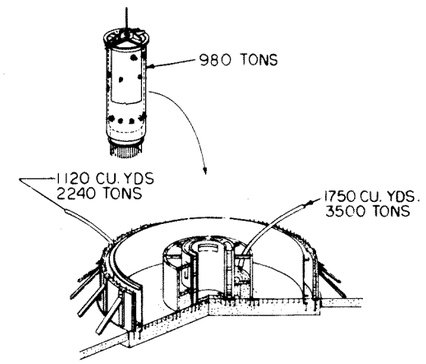

IN PLACE WEIGHT-18360 TONS

Step 3. Install and anchor reactor vessel assembly (Module 2) and prepare the reactor shield wall (Module 3) for installation.

* Begin installation of substructure modules for adjacent buildings.

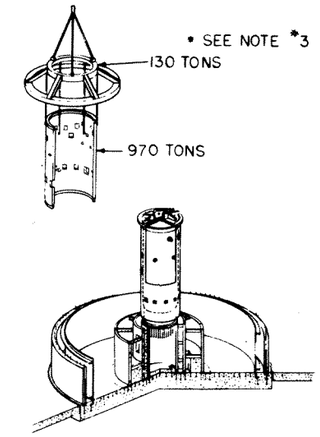

IN PLACE WEIGHT-19340 TONS

Step 4. Install and anchor reactor shield wall (Module 3) and prepare recirculating loop modules (4A and 4B) and hollow precast first course of shield building (Module SB-1) for installation.

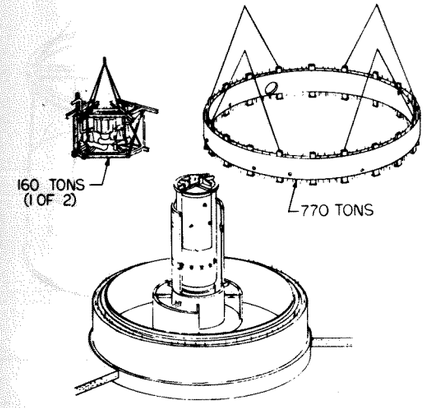

IN PLACE WEIGHT-20310 TONS.

Step 5. Install recirculating loop modules (4A and 4B) on temporary supports, and install and anchor hollow precast first course of shield building (Module SB-1). Prepare recirculating header-riser assemblies (Modules 5A and 5B) for installation.

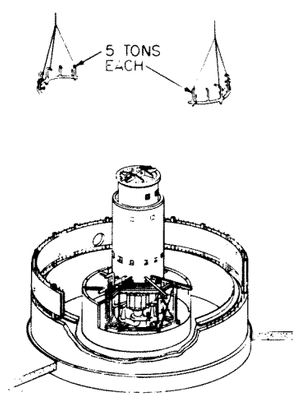

IN PLACE WEIGHT-21400 TONS

Step 6. Install recirculating header-riser assemblies (Modules 5A and 5B) and connecting spool pieces and prepare control rod drive ducted piping assemblies (Modules 6A and 6B) and RHR piping assembly (Module 7) for installation.

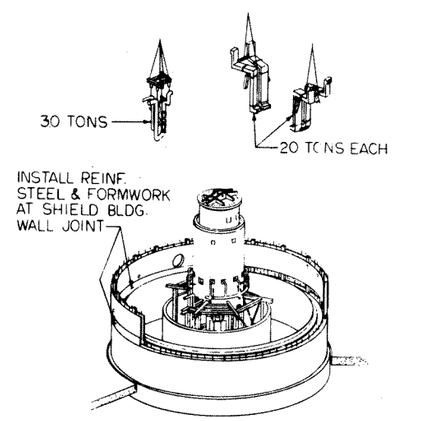

IN PLACE WEIGHT-21410 TONS

Step 7. Install CRD ducted piping assemblies (Modules 6A and 6B) and RHR piping assembly (Module 7) on temporary supports and prepare lower course steel shell for drywell (Module 8) for installation.

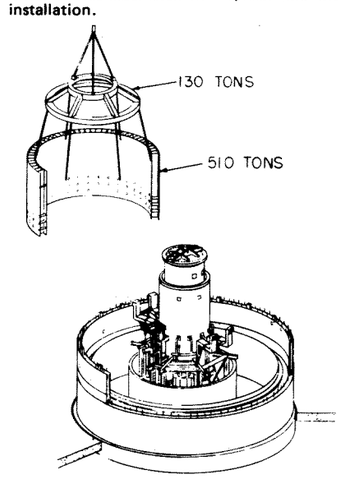

IN PLACE WEIGHT-21480 TONS

Step 8. Install and anchor lower course shell for drywell (Module 8). Fill it and shield building first course (Module SB-1) with concrete. Connect permanent steel frame (and remove temporary members) for modules 4A and 4B. Prepare upper course of drywell shell (Module 9) for installation.

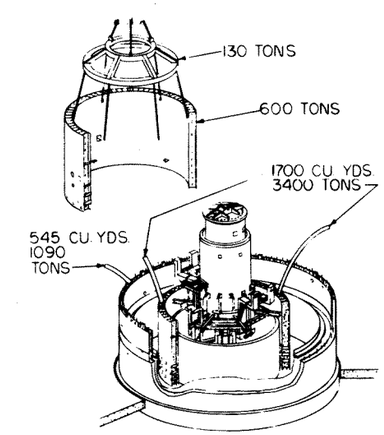

IN PLACE WEIGHT-26470 TONS

Figure 4-65A Reactor Building Modular Construction [42] - Steps 1-8

Step 9. Install upper course of drywell shell (Module 9) and fill it with concrete. Prepare feedwater piping assemblies (Modules 10A and 10B) for installation. Remove temporary formwork at shield building wall joint.

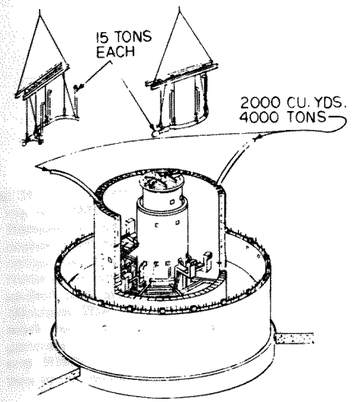

IN PLACE WEIGHT-31070 TONS

Step 10. Weld in risers and temporarily support headers of FW piping assemblies (Modules 10A and 10B). Prepare platform framing assemblies (Modules 11A, 11B and 11C) and precast second course of shield building wall (Module SB-2) for installation.

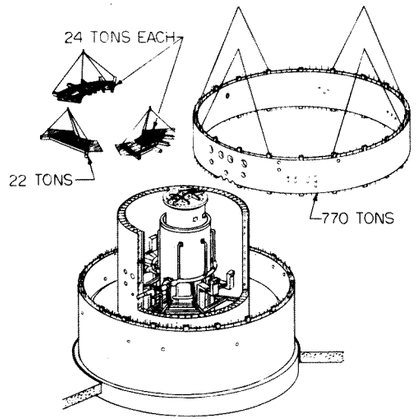

IN PLACE WEIGHT-31100 TONS

Step 11. Install platform framing assemblies (Modules 11A, 11B and 11C) and install FW piping assemblies (Modules 10A and 10B) on permanent supports. Install and anchor shield building second course (Module SB-2). Prepare steam piping assemblies (Modules 12A, 12B, 13A and 13B) for installation.

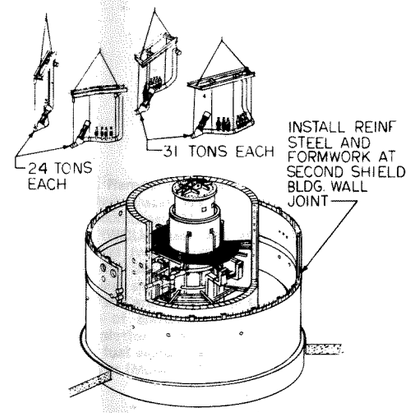

IN PLACE WEIGHT-31940 TONS

Step 12. Weld in risers and temporarily support valve headers of steam piping assemblies (Modules 12A, 12B, 13A and 13B). Fill second course of shield building wall (Module SB-2) with concrete. Prepare pipe support frames (Modules 14A and 14B) and precast third course of shield building (Module SB-3) for installation.

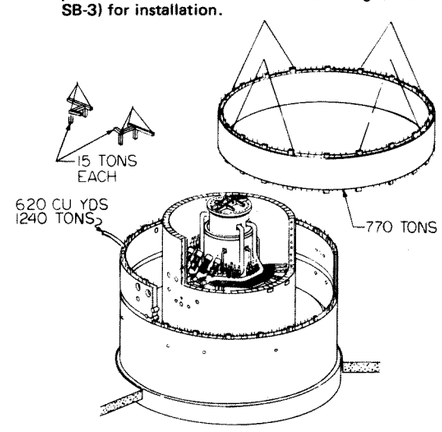

IN PLACE WEIGHT-33290 TONS

Step 13. Install pipe support frames (Modules 14A and 14B) and put steam piping on permanent supports. Install shield building third course (Module SB-3). Prepare and install S/R valve discharge piping and other miscellaneous piping.

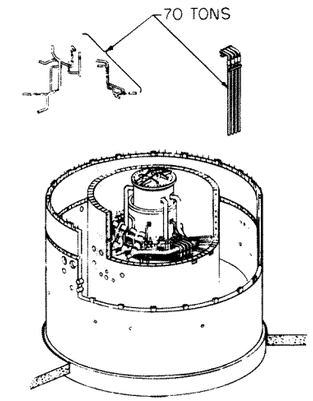

IN PLACE WEIGHT-34160 TONS

Step 14. Install temporary drywell cover. Install reinforced steel and temporary formwork at third shield building wall joint and fill third course of shield building wall (Module SB-3) with concrete. Prepare second course of containment shell (Module C-2) for installation.

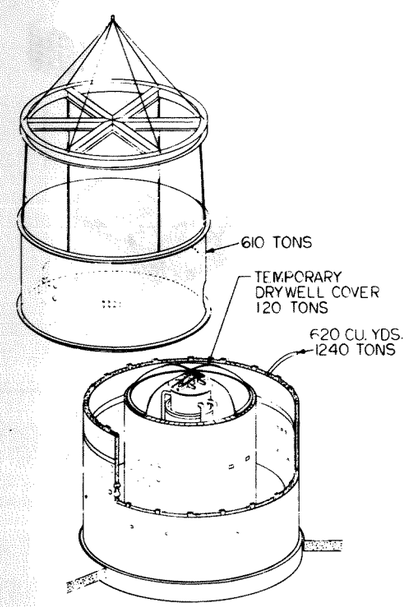

IN PLACE WEIGHT - 35520 TONS

Step 15. Install second course of containment shell (Module C-2). Install forms and reinforcement for concrete structures between containment shell and shield building (at steam tunnel and fuel transfer tube). Prepare RCWU pump rooms (Module 15), lock and hatch level platforms (Modules 16A through 16E), hydraulic C.U. platforms (Modules 17A through 17H), and steam tunnel (Module 18) for installation. Remove shield building joint forms.

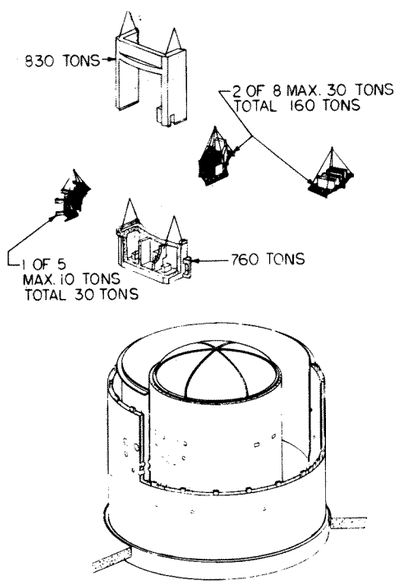

IN PLACE WEIGHT - 36130 TONS

Step 16. Pour concrete for connecting structures between containment shell and shield building. Install RWCU pump rooms (Module 15). Install lock and hatch level platforms (Modules 16A through 16E). Install steam tunnel (Module 18), and hydraulic C.U. platforms (Modules 17A through 17H). Prepare liquid control system equipment (Module 19), mid-level platform sections (Modules 20A, 20B and 20C), fuel service pools (Module 21) and RWCU tank and valve rooms (Module 22) for installation.

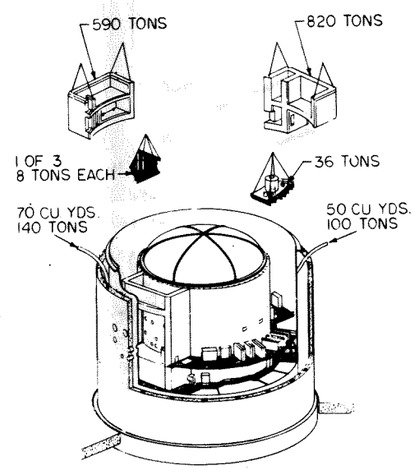

IN PLACE WEIGHT - 38150 TONS

Step 17. Install L.C.S. equipment (Module 18), mid-level platform sections (Modules 20A through 20C), fuel service pools (Module 21) and RWCU tank and valve rooms (Module 22). Fill joints between concrete modules with grout. Prepare next two courses of shield building (Modules SB-4 and SB-5) and next course of containment shell (Module C-3) for installation.

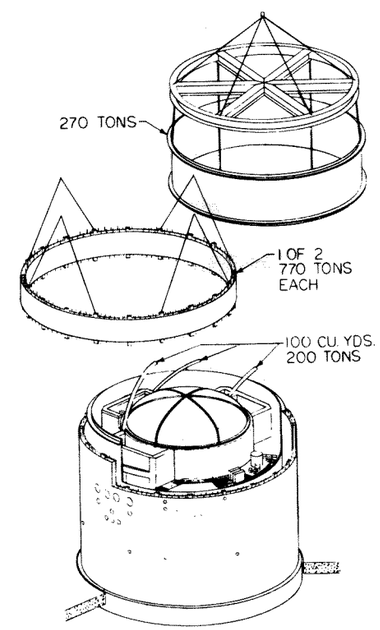

IN PLACE WEIGHT - 39620 TONS

Step 18. Install fourth and fifth courses of shield building (Modules SB-4 and SB-5) and reinforced steel and formwork and joints. Install third course of containment shell (Modules C-3). Prepare steel frames (Modules 23, 24 and 25) for composite structures over drywell for installation. Prepare steam tunnel piping assemblies (Modules 26A through 26J) for installation.

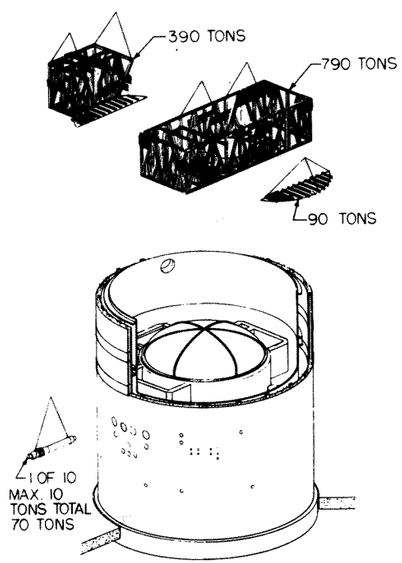

IN PLACE WEIGHT - 41630 TONS

Figure 4-65B Reactor Building Modular Construction[42] - Steps 9-18

Step 19. Fill fourth and fifth courses of shield building wall (Modules SB-4 and SB-5) with concrete. Remove temporary drywell cover. Install and anchor steel frames (Modules 23, 24 and 25) for composite structures over drywell. Weld frame to frame joints and drywell ceiling plate joints. Install, anchor and seal steam tunnel piping assemblies (Modules 26A through 26J). Erect external formwork for structures over drywell. Pour structural concrete of drywell roof and floor slabs of pools and RWCU equipment rooms. Prepare pool liner box units (Modules 27, 28 and 29) for installation.

Step 20. Install, anchor, connect and leak test pool liner box units (Modules 27, 28 and 29). Erect internal formwork for RWCU equipment rooms. Pump grout under pool liner floors. Pour finish concrete for drywell roof and equipment room floors. Pour concrete for all wall and top slab structures. Prepare HVAC units (Module 30), hydrogen recombiner (Module 31), RWCU HXS (Module 32), RWCU filters and miscellaneous equipment, and next two courses of shield building (Modules SB-6 and SB-7) for installation.

Step 21. Remove all temporary formwork inside containment. Install HVAC units (Module 30), hydrogen recombiner (Module 31), RWCU HXS (Module 32), RWCU filters and miscellaneous equipment, and next two courses of shield building (Modules SB-6 and SB-7). Erect reinforcing steel and formwork and shield building joints. Set refueling platform rails and install fuel pool gate. Prepare fourth course of containment shell (Modules C-4), pool level platform sections (Modules 33A, 33B and 33C), fuel storage racks (Module 34), and refueling platform (Module 35) for installation.

Step 22. Fill sixth and seventh courses of shield building wall (Modules SB-6 and SB-7) with concrete. Install fourth course of containment shell (Module C-4), pool level platform sections (Modules 33A, 33B and 33C), fuel storage racks (Module 34) and refueling platform (Module 35). Prepare reactor head (Module 36), drywell head (Module 37), personnel lock (Module 38), and polar crane (Module 39) for installation. Prepare steam dryers (Module 40), steam separator (Module 41), and reactor head insulation (Module 42) for storage.

Step 23. Remove shield building formwork. Remove temporary cover over drywell and temporary reactor vessel cover. Temporarily install reactor head (Module 36) and drywell head (Module 37). Place steam dryers (Module 40), steam separators (Module 41) and reactor head insulation (Module 42) in storage locations. Install personnel lock (Module 38) and polar crane (Module 39). Prepare containment dome (Module C-5) and shield building transition course (Module SB-8) and shield building dome (Module SB-9) for installation.

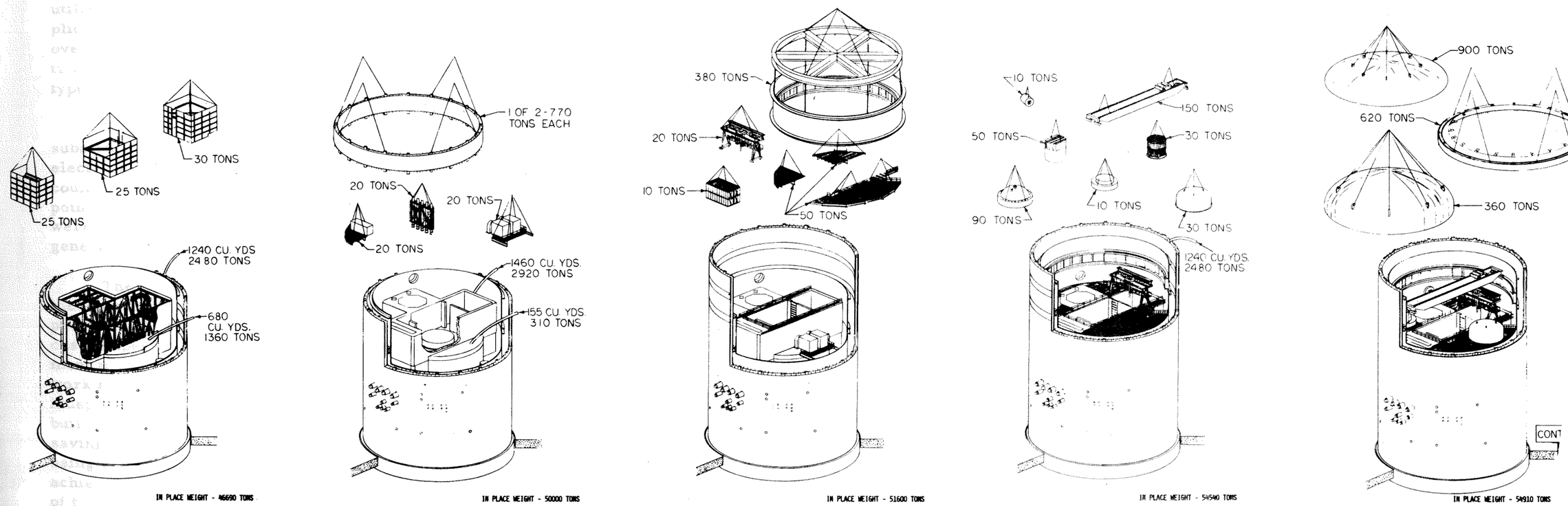

Figure 4-65C Reactor Building Modular Construction - Steps 19-23

In all of the studies, primary effort was focused on structural modules, primarily because structures are the major limiting item in the construction schedule and consume a large fraction of the construction manhours. Some equipment modules were also identified in areas in which basic arrangements appeared to be amenable to pre-assembly (reactor recirculating loop, steam lines, reactor feed pump manifold, etc.), but the amount of design effort that would be required to optimize all piping systems modules was outside the scope of these studies.

In the three studies mentioned above, it was not possible to develop an overall concept for modularization of electrical components comparable to that done for mechanical and structural components. There are opportunities to integrate electrical components into a number of mechanical modules (the recirculation pump module, the standby liquid control system, etc.) and a substantial amount of prewiring is possible in the control room. This amount could be expanded greatly if the large steel auxiliary structure (module AB-5a and AB-5b in Appendix 4. A2) were utilized. The problem of large scale electrical modularization is complicated by the basic building arrangements which require cable runs over long distances and by safety criteria which lead to physical separation of electrical components and currently do not permit "plug-in" type connectors in critical circuits.

Consequently, the schedule sequences for all buildings indicate substantial periods of time for activities labelled "Install miscellaneous electrical equipment, pull cable, and connect." It is believed that these could be substantially reduced by further study and design. It should be pointed out that the plant arrangements used as a basis for these studies were developed as an optimum for conventional construction techniques generally rather than for extensive modular construction of any kind.

The plant erection process can best be visualized by examining the schedules of Appendix 4. A1 and the referenced figures. The basic procedure is that of building up structures from prefabricated or precast shapes and slabs and installing mechanical equipment and equipment modules in rooms as they are formed. The basic process permits work to begin and proceed in parallel in many areas simultaneously and independently. As a result, the study indicated that the reference plant built using modular construction could be completed in 44 months, a saving of 16 months over the time required to construct the same plant using conventional construction methods. The effect of other economies achievable through modular construction are evaluated in other sections of this report. Savings in direct and indirect manhours are anticipated for the following reasons:

1. Work performed in the prefabrication areas and module shops is largely indoors and subject to minimum effect from the weather.

2. Work on the modules is done with specialized tools, jigs, fixtures, hoists, positioners, etc. which are readily available to the workmen at the work stations, and arranged for work accessibility.

3. Inspection and other QA related activities can be more effectively performed in the module shops than in the plant buildings, and the percentage of rejections and rework is expected to be substantially less. Radiographs and other NDT procedures can be completed on pipe subassemblies in the module shops, some piping sub-systems can be hydrotested, some complete systems such as the standby liquid control system can be functionally checked, interconnected panels can be checked for proper circuitry and electrical characteristics, etc.

4. The work which remains to be completed in the plant buildings will be done more efficiently because of reduced worker congestion.

There is no background of historical information on which to base an estimate of the direct labor savings that can be achieved using construction modules rather than conventional methods. However, studies made on large chemical processing plants and data accumulated to date indicate that productivity is increased by factors ranging from 1.5 to 4 when work is moved from the plant buildings into the module shops, with the work done in both areas under the same union agreement.

The study reported in Appendix 4.A1 covered all the major buildings in the plant. In executing the work, so that a direct comparison between construction schedules could be made, no attempt was made to redesign the arrangements and structures. The buildings are divided into the largest elements which could be handled by the large gantry crane and which were compatible with structural requirements and the erection sequence. These elements - predominantly concrete slabs and steel-concrete complexes - are identified in Appendix 4.A1.

In the study, a schedule was developed for modular construction of the nuclear island buildings and the turbine building. The study was performed in sufficient detail to give preliminary identification of the major structural and mechanical modules. The construction sequence and time span required for each step of the work is presented in bar-chart schedules. As noted above, the overall construction time for a single 1220 MW unit was found to be about 44 months from the start of excavation to completion of pre-operational tests and the start of fuel

loading.

Usage requirements for the large gantry crane were investigated. It was assumed that the gantry would be used to transport and place all modules heavier than 200 tons. It was also assumed that construction of successive units would start at twelve-month intervals, so that construction would be underway on several units simultaneously. The schedule analysis showed that a single gantry can service all heavy modules for a block of four to six units.

The study presents an estimate of the degree of modularization that can be expected for each building, subdivided into structural, mechanical, and electrical labor. Experience has shown that improved labor productivity can be achieved in module prefabrication. Productivity factors range from about 1.5 to 4.0, depending upon the type of work.

In the study reported in Appendix 4.A2, an evaluation was made of the effect of using steel shells filled with water for shielding in lieu of poured-in-place or precast concrete. To provide the equivalent amount of shielding, it is necessary to increase the wall thickness by a factor of approximately two. This fact precludes using the reactor building for evaluation, because an increase in shielding wall thickness would require changing the drywell size, basic piping arrangements, the containment and shield building diameters, the configuration of water in the suppression pool, and would also require re-evaluation of transient behavior of the containment during postulated accident conditions, an effort beyond the scope of the study. For this reason, the auxiliary building was selected for study.

As pointed out in Appendix 4.A2, some concrete walls are retained only where necessary for structural purposes or to provide external missile protection. The steel modules are relatively light at the time they are moved from the fabrication shop to the plant building, shielding water being added after they are set. This feature makes it possible to use very much larger modules without exceeding the capacity of the large gantry crane. Specifically, it appears possible to fabricate the RCIC pump room and lower portions of the RHR rooms (Module AB-1), the steam tunnel walls (Module AB-3), and the upper floors of the east and west wings of the auxiliary building (Modules AB-5-a and AB-5-b) as complete subassemblies. The fabrication and placement of these large steel structures resembles practices used in shipyards, where hull sections and complete deck houses are handled in this manner. The building wings (Modules AB-5-a and AB-5-b) have particular appeal because they provide an opportunity to pre-install and connect much of the equipment that they house, principally HVAC and electrical equipment.

1. Work performed in the prefabrication areas and module shops is largely indoors and subject to minimum effect from the weather.

2. Work on the modules is done with specialized tools, jigs, fixtures, hoists, positioners, etc. which are readily available to the workmen at the work stations, and arranged for work accessibility.

3. Inspection and other QA related activities can be more effectively performed in the module shops than in the plant buildings, and the percentage of rejections and rework is expected to be substantially less. Radiographs and other NDT procedures can be completed on pipe subassemblies in the module shops, some piping sub-systems can be hydrotested, some complete systems such as the standby liquid control system can be functionally checked, interconnected panels can be checked for proper circuitry and electrical characteristics, etc.

4. The work which remains to be completed in the plant buildings will be done more efficiently because of reduced worker congestion.

There is no background of historical information on which to base an estimate of the direct labor savings that can be achieved using construction modules rather than conventional methods. However, studies made on large chemical processing plants and data accumulated to date indicate that productivity is increased by factors ranging from 1.5 to 4 when work is moved from the plant buildings into the module shops, with the work done in both areas under the same union agreement.

The study reported in Appendix 4.A1 covered all the major buildings in the plant. In executing the work, so that a direct comparison between construction schedules could be made, no attempt was made to redesign the arrangements and structures. The buildings are divided into the largest elements which could be handled by the large gantry crane and which were compatible with structural requirements and the erection sequence. These elements - predominantly concrete slabs and steel-concrete complexes - are identified in Appendix 4.A1.

In the study, a schedule was developed for modular construction of the nuclear island buildings and the turbine building. The study was performed in sufficient detail to give preliminary identification of the major structural and mechanical modules. The construction sequence and time span required for each step of the work is presented in bar-chart schedules. As noted above, the overall construction time for a single 1220 MW unit was found to be about 44 months from the start of excavation to completion of pre-operational tests and the start of fuel

loading.

Usage requirements for the large gantry crane were investigated. It was assumed that the gantry would be used to transport and place all modules heavier than 200 tons. It was also assumed that construction of successive units would start at twelve-month intervals, so that construction would be underway on several units simultaneously. The schedule analysis showed that a single gantry can service all heavy modules for a block of four to six units.

The study presents an estimate of the degree of modularization that can be expected for each building, subdivided into structural, mechanical, and electrical labor. Experience has shown that improved labor productivity can be achieved in module prefabrication. Productivity factors range from about 1.5 to 4.0, depending upon the type of work.

In the study reported in Appendix 4.A2, an evaluation was made of the effect of using steel shells filled with water for shielding in lieu of poured-in-place or precast concrete. To provide the equivalent amount of shielding, it is necessary to increase the wall thickness by a factor of approximately two. This fact precludes using the reactor building for evaluation, because an increase in shielding wall thickness would require changing the drywell size, basic piping arrangements, the containment and shield building diameters, the configuration of water in the suppression pool, and would also require re-evaluation of transient behavior of the containment during postulated accident conditions, an effort beyond the scope of the study. For this reason, the auxiliary building was selected for study.

As pointed out in Appendix 4.A2, some concrete walls are retained only where necessary for structural purposes or to provide external missile protection. The steel modules are relatively light at the time they are moved from the fabrication shop to the plant building, shielding water being added after they are set. This feature makes it possible to use very much larger modules without exceeding the capacity of the large gantry crane. Specifically, it appears possible to fabricate the RCIC pump room and lower portions of the RHR rooms (Module AB-1), the steam tunnel walls (Module AB-3), and the upper floors of the east and west wings of the auxiliary building (Modules AB-5-a and AB-5-b) as complete subassemblies. The fabrication and placement of these large steel structures resembles practices used in shipyards, where hull sections and complete deck houses are handled in this manner. The building wings (Modules AB-5-a and AB-5-b) have particular appeal because they provide an opportunity to pre-install and connect much of the equipment that they house, principally HVAC and electrical equipment.

A tabulation of the major auxiliary building modules and their size is given in Table 5-1.1 in Appendix 4.A2. Using these, the study indicated that the auxiliary building could be completed in 34 months, compared to 44 months using all concrete modules. This analysis was made assuming that work could proceed on the auxiliary building entirely independent of work on other buildings, and in that respect is not realistic. However, the conclusion can be drawn that the lighter weight of steel/water modules can be utilized in a power park with appropriate fabrication facilities to achieve substantial schedule improvement. The concept is sufficiently promising to warrant further study.

4.11.6 Construction Facilities

4.11.6.1 SITE ARRANGEMENT. Fundamental elements in the modular approach to construction are the facilities in which the modules themselves are fabricated. These include shops for processing basic construction materials (rebar and structural steel, mill lengths of pipe, wire and cable on spools, etc.) into proper shape and size, shops for the assembly and testing of piping and mechanical modules, the facilities for forming concrete modules, etc. These are described in this section, covering one arrangement that could be used in a four or six plant complex.

This arrangement of shops and plants is shown in Figure 4-66. This configuration is laid out to make maximum utilization of the large gantry crane which spans all of the plants and straddles the cement casting yard. At right angles to the gantry crane way is a transportation corridor into which modules from the component shops are moved to a position for pickup by the large gantry. This movement is done using local yard cranes or special dollies or transporters. A number of various types, including multi-wheeled rubber tire and air cushioned vehicles have been developed and used in construction work during recent years (13). The concrete casting yard is located directly under the gantry crane in order to minimize double handling of the large number of heavy concrete structural modules.

This arrangement is laid out assuming that the construction sequence calls for units to be built in the sequence #1, #2, #5, #3, and #4, starting and finishing in that order. This is necessary in order to minimize the number of times that it will be necessary for the gantry to move a heavy load over an area in which work is in progress. An examination of the construction schedules in Appendix 4.A1 shows that the majority of the heavy modules are moved and set in place during the first 24 months, so that the number of times that modules must be carried to Plant #1 after construction has begun on Plant #2 is mini-

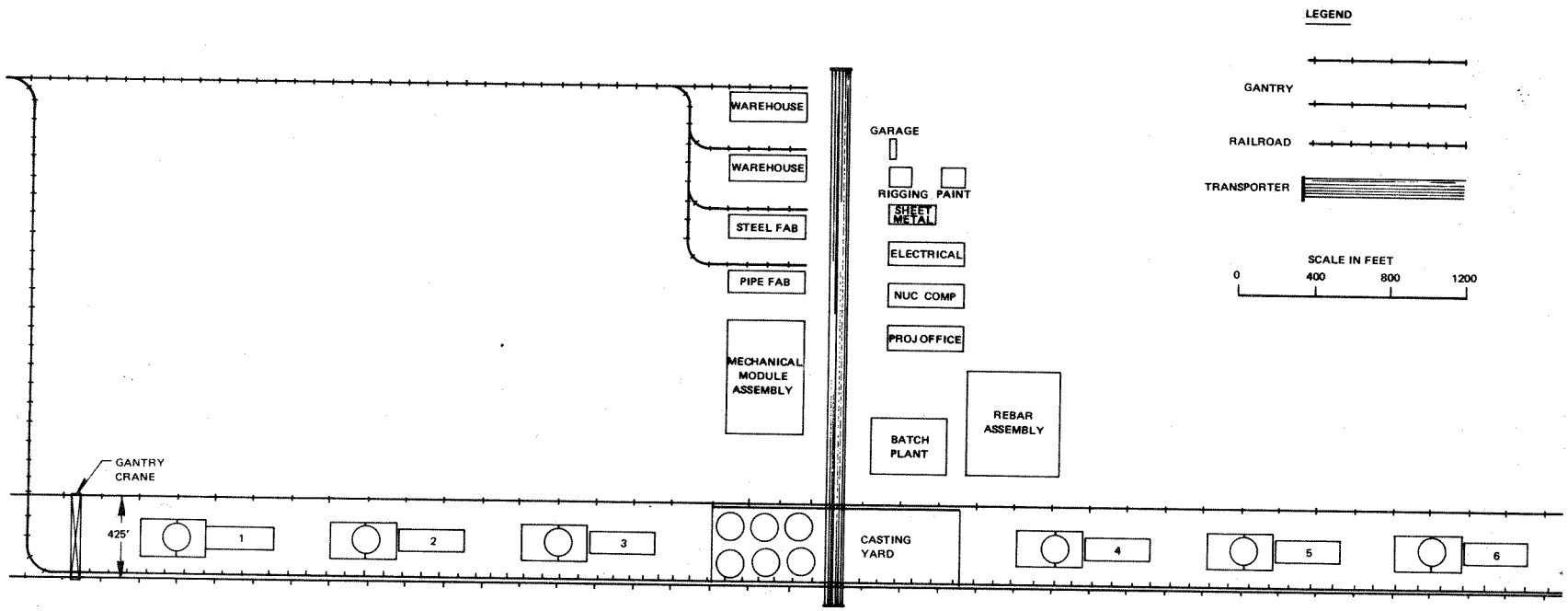

Figure 4-66 Typical Modular Construction Site Layout

mized. This is also true for #5 and #6, #3 and #2, etc. The exceptions are some parts of the reactor building (Modules R43, R44, and R48), the fuel building (Module F23), the auxiliary building (Module A-20), the radwaste building (Modules W21, W22, W23, W24, W25, W27, and W28), and the turbine building (Modules T-71 and T-72). It is possible to schedule this limited number of moves so that they are made during off-shift times when the "underneath" construction site is not occupied. If construction were done on a three shift basis, it would be necessary to schedule the heavy lifts during shift change periods or to clear the site when heavy loads are being made overhead. Because their number is small, the effect on overall schedule should be insignificant. The schedules in Appendix 4.A1 were developed assuming one shift per day construction, providing ample time for crane movement during the nine month period when construction at Plant #1 and Plant #2 might interfere.

The large gantry crane is a key element in the total site arrangement and is fundamental to the modular construction concept. Cranes of this size have been utilized in shipyards and their application to the power park concept has been evaluated.[42] Because of its importance in the overall construction schedule, a study was made of the total number of heavy lifts required for plant construction using the concrete modules described in Appendix 4.A1. From this study it was concluded that a single gantry crane would have the capacity to move modules to about six to seven plants in the configuration shown in Figure 4-66. Beyond this number, limitations in crane travel time and overhead passage would becoming limiting. Additionally the possibility of identifying a site suitable for more than six or seven plants strung out in a straight line could not be assumed. The assumption that the gantry crane, carrying a heavy load, could be rotated on a turntable or switched onto a branch track would open up many alternates for the construction facility layout. However, these alternates were not considered because the technical feasibility of this concept has not been demonstrated. In a site utilizing a larger number of plants located so that they could be supplied from a common central module fabrication shop complex, a second gantry crane and another set of tracks could be justified economically, and alternate overall shop-plant configurations could be developed. To be meaningful, the determination of an optimum fabrication facility, in terms of scope and arrangement, would be performed after site characteristics and limitations have been clearly identified.

In laying out the size and arrangement of shops shown in Figure 4-66, it was assumed that basic incoming material is essentially identical to that which is received at a conventional construction site, and that this material is fabricated into modules at a rate that would support the

construction of plants at the rate of one completion per year. It was also assumed that the site characteristics were such that the optimum location for these shops is within the boundaries of "the site." This assumption was made in the absence of specific information regarding the availability of barge transportation between the "theoretical site" and the "postulated module factory."

In some specific cases in which modular construction has been utilized in petrochemical plants, the module shops were removed from the construction site as little as one mile in one case and several thousand miles in other cases. The relationship is greatly influenced by the meteorological and geophysical characteristics of the construction site, the availability and cost of labor at the construction and at the factory site, and the means of transportation available between the two sites. To evaluate the optimum location for a module plant, a trade-off evaluation would have to be performed which took into consideration the cost and availability of labor, cost of transportation, utilization of resources, and organization, institutional and legal considerations of the module factory located at the site contrasted to a different and possibly remote location. Such an evaluation is beyond the scope of this study. For these reasons, a feasible case, locating the module shop at the construction site, was taken as the reference case.

The shop buildings and all other manufacturing components which make up the factory will be designed so they can be dismantled after a period of five or six years, moved to another site and reassembled as required to produce modules for another series of plants.

Figure 4-66 shows a preliminary arrangement for one of the proposed construction sites. As previously mentioned the overall configuration is somewhat like the figure "T" with a row of power plants forming the cross-bar and factories and shops making up the support column.

With the design, the plants will be laid out in a straight line with adjacent units placed end-to-end for a lateral distance of approximately one mile. The 1000 ton gantry will have a crane span of 420 feet in order to straddle the plant buildings and will run from one end of the assembly line to the other.

The on-site factory area will be located at the mid-point of the power plant assembly line. A view of Figure 4-66 shows how all of the shops and manufacturing areas are laid out along a central avenue which includes a heavy load rail transporter. This transporter will be able to move 1000 ton modules from the factories and shops down the central avenue to a

pickup spot which will be located directly under the main crane. From here, the module can be carried to any of the required sites.

As shown by the sketch, the space on the near side of the plant line has not been utilized. This area has been left clear in order to provide for plant cooling facilities as cooling ponds, cooling towers, etc.

4.11.6.2 CRANES AND TRANSPORTERS. One of the most important components which will be used during construction of the power park will be the 1000 ton capacity gantry crane. This crane will have a span of 420 feet and a crane height from rail level to the underside of the bridge of approximately 220 feet. For a six unit plant site the overall length of the crane run will be approximately 8000 feet.

In addition to the main crane, there will also be several other transporters which will be used for moving modules from place to place. One of these will be a rail transporter which will move through the central factory area to a pickup spot located directly under the main crane. This transporter will have a flatbed steel frame mounted on a series of steel railroad wheels or trucks. The 3000 foot long railway will consist of several sets of rails as required to provide for uniform distribution of the 1000 ton loads. It will be moved by either a donkey engine or a cable/windlass system.

Smaller modules in the 400 to 600 ton range will be moved from shop or assembly area to the plant sites by means of multi-wheeled rubber tire transporters. These transporters will be towed by tractors and since they are equipped with a hydraulic steering system, they can be easily maneuvered around corners and turns. Extra heavy or very wide loads can be accommodated by joining together two or more of these transporter units as required.

In addition, there will also be a significant number of trucks, trailers and mobile cranes available at all times to insure a steady flow of materials and equipment.

For this first evaluation, it was assumed that first class rail service would be available at the site. The main spur line will be laid out so it is directly under the main crane for the full length of the plant assembly line. With this arrangement, heavy equipment and smaller modules which have been fabricated at other locations can be delivered directly to the plant site by rail and then positioned with the gantry crane. A second spur will be provided to service the major fabrication shops and warehouses so as to provide means for a steady supply of incoming materials and equipment.

4.11.6.3 FACTORY AND ASSEMBLY AREAS. The onsite factory will consist primarily of a series of moderately equipped fabrication shops, a concrete batch plant and a precast yard. The main purpose of this factory will be to manufacture large quantities of completed unit modules and other subassemblies which can be used to construct a series of nuclear power plants. A complete listing of the fabrication shops and concrete facilities is provided below along with several brief descriptions for some of the more functional areas.

Pipe Shop. A complete fabrication shop will not be provided for this facility since nearly all of the major piping components will be fabricated offsite and shipped in as spools. Work in the shop will consist of joining spools together to form larger sections and building up piping subassemblies by adding on valves, pumps, hangers and supports, etc. In addition, some prefabrication work will be done for the secondary and auxiliary systems.

Approximate Size: 60,000 sq. ft., 65 ft. high bay,
40 ft. low bay

Steel Fabrication Shop. Work will consist of receiving, handling, fabricating and assembling much of the steel structures required for constructing the plant including foundations, crane supports, module frames, pool liners, tanks and miscellaneous structures.

Approximate Size: 55,000 sq. ft., 65 ft. high, 45 ft. low bay

Nuclear Component Shop. All of the NSSS except the RPV will be received, cleaned and inspected in this shop. Many of the components for the various auxiliary systems will be joined together to form large subassemblies or completed system modules.

Approximate Size: 50,000 sq. ft., 60 ft. single level

T-G Assembly Platforms. Sections of the main turbine unit will be preassembled on special platforms which are located in the general assembly area directly under the main crane. As soon as the sections are completed, they will be picked up by the main gantry and delivered to the individual sites as required. The assembly platforms will be rugged concrete structures which resemble a shortened T-G pedestal.

Mechanical Module Assembly Area. The mechanical assembly area will be located near the shops and the rail transporter system. It will serve as a combination buffer and storage area and also provide space for combining subassemblies and small modules into large and

heavier units prior to transporting to the plant site for final installation.

Approximate Size: 40,000 sq. ft.

Concrete Shop. The concrete shop will consist of three separate facilities including a batch plant, a rebar assembly area and a precast yard. Concrete mixed at the batch plant will be moved to the precast yard and the various plant sites by means of conveyor belts or mixer trucks. The precast yard will be located directly under the main gantry crane in order to facilitate lifting and transporting of the heavy modules.

Approximate Size/Capacity:

Batch Plant	200 cu. yds./hr.
Precast Yard	230,000 sq. ft.
Rebar Assembly Yard	270,000 sq. ft.

Other Shop Areas and Enclosed Facilities

Electrical Shop	40,000 sq. ft.
Sheet Metal Shop	25,000 sq. ft.
Rigging Shop	10,000 sq. ft.
Paint Shop	15,000 sq. ft.
Garage and Motor Pool	3,500 sq. ft.
Warehouses	2 units - 60,000 sq. ft. each
Project Office & Cafeteria	Offices 100,000 sq. ft.
	Cafeteria 6,000 sq. ft.

Total Covered Work Space and Support Facilities:

Approximately 524,000 sq. ft.

The shops were sized based on conventional construction experience (particularly the concrete facilities) and various indices used to

prepare estimates of fabrication and manufacturing facilities for business planning purposes.

4.11.7 Other Construction Economies.

The studies completed to date have drawn on the experience of manufacturers, architect-engineers, constructors, and utilities, and have identified many opportunities for reducing the cost of nuclear power plant generally and, more specifically, plants constructed in a power park. However, limitations in funding, scope, and resources available to these studies has made possible only a rough approximation of the possibilities for cost improvements. The studies have dealt with technical aspects of the design and construction of nuclear power plants. Within this context, the following areas have emerged in the course of the studies completed to date as opportunities for further reduction in the resources required to complete nuclear electric generating plants in a power park complex.

4.11.7.1 DESIGN FOR MODULAR CONSTRUCTION. To date all studies have started with an arrangement of buildings and structures designed basically to be built using conventional construction techniques. These generally represent a compromise between spaciousness to provide room for operational considerations and compactness to minimize the cost of materials. Experience to date in the petrochemical field indicates that modular construction methods, if used, must be anticipated in the total plant design, beginning with basic arrangements and continuing to the definition of all the significant construction modules. It is believed that additional economies could be identified and achieved through the development of a design specifically for modular construction.

4.11.7.2 EXPANDED MODULARIZATION. Studies to date have concentrated on structural modules primarily, and mechanical equipment secondarily, with little effort being devoted to electrical modules, and subsystem modules comprising electrical and mechanical components. Inasmuch as the electrical work in a nuclear power plant requires 15% to 20% of the total manhours required to complete a plant, it is believed that substantial additional savings could be achieved in this area.

4.11.7.3 MODULAR SHOP FACILITIES. This study identified at least ten component shops which are assumed to be located at the site and served by the large gantry crane. The size and cost of these shops were estimated using very rough rules-of-thumb for industrial facilities. As the number of units built at a common site increases, a greater expenditure for facilities can be justified to reduce labor manhours. It is believed

that further study can develop an optimum facility investment corresponding to 4, 8, or 20 unit parks that could be shown to reduce the construction manhours and total cost.

4.11.7.4 MATERIAL LOGISTICS. The ability to move large subassemblies and modules in the park complex, and the equipment to accomplish this, becomes a limiting item in park arrangement layouts and in construction schedules, limited physically by the mobility of the large gantry crane and by the expense of other large mass transporters. Consideration should be given to a concept in which the plant in various stages of completion can be moved from one work station to another in the manner proposed by Offshore Power Systems for the construction of floating power plants.[43] The concept of a power park comprised of plants floating in a body of water which is both the ultimate heat sink and the means of transportation has not been examined in this study and may have fundamental advantages in schedule and construction efficiency.

4.11.8 Conclusions and Recommendations

The three studies which evaluated modular construction pointed out the opportunities for substantial savings in terms of schedule and manpower that could be realized in the construction of nuclear power plants by the use of construction techniques which are more or less novel to the nuclear industry. It is significant that the petrochemical industry has been more progressive in applying these procedures than the nuclear industry. There are numerous reasons why this difference should exist, not the least of which is the long and ever lengthening time required to design, license, and construct nuclear generating plants. In addition, the necessary emphasis on safety and safety features has tended to concentrate attention and resources in safety related areas and indirectly has created an atmosphere not conducive to construction innovation.

It is recognized that all three of the studies are somewhat inconsistent, in that they compare projections against established facts. However, the projections are supported by parallels in other industries so that the conclusion must be drawn: under the right circumstances substantial savings could be realized in the construction of nuclear power plants through modular construction.

As pointed out in Section 4.11.6, Construction Facilities, construction modules require the commitment of resources for permanent or semi-permanent facilities, the cost of which are offset by savings in direct labor and related financing costs. The trade-off between

early investment costs and subsequent labor costs is complicated and influenced by money factors as discussed. In addition, modularization, to be effective, requires that plant designs be developed anticipating that modular construction techniques will be employed. Considering all these factors, it is recommended that any subsequent studies of nuclear power parks include the following elements:

1. The definition of a specific site or a limited number of specific sites, with the topography, seismology, cooling water sources, power grid connections, and potential transportation facilities, well identified.

2. The option to modify basic arrangement concepts to accommodate optimum construction procedures.

3. Determination of optimum module size, content, and configuration.

4. Investigation in greater detail of fabrication facilities and their location.

5. Consideration of innovative means for electrical construction.

6. Active participation by utilities or utility groups whose power systems could accommodate the large blocks of energy that power parks would make available.

Pages 4-302/317 are deleted and covered in Task 2

APPENDIX 4.A-1

MODULAR CONSTRUCTION OF NUCLEAR POWER CENTERS

GENERAL ELECTRIC COMPANY

PURCHASE ORDER 205 H7851

BRAUN PROJECT 5003-P

C F BRAUN & CO

MARCH 1, 1975

CONTENTS

		PAGE
I	Introduction	4-320
II	Summary	4-322
III	Conclusions	4-324
IV	Discussion	4-325
	General Considerations	4-325
	Modular Construction	4-327
	Construction Procedure	4-328
	Construction Schedules	4-330
	Gantry Crane	4-331
	Casting Yard	4-331
	Construction Labor Requirements	4-332
	Future Work	4-332
V	Appendices	
	Tables	4-334
	References	4-342
	Figures	4-343

SECTION I

INTRODUCTION

THE COST PROBLEM

At the present time, the high cost of nuclear power plant construction is causing serious financing problems for the utility community. The result is a curtailment of nuclear construction in a period when the national interest would better be served by expanded activity. Still another result has been a great interest by the nuclear industry in exploring alternatives to conventional construction methods as a means to shorten construction schedules and improve construction efficiency.

Power Center

The Nuclear Power Center is a concept that offers significant potential for cost and schedule reduction. The plan proposes the building of a number of identical nuclear plants (four or more at a single site). The concept of repeated duplication clearly reduces the costs of engineering, procurement, and licensing. The added feature of a single site for several plants makes possible important opportunities for improved efficiency. These are described in the General Electric Report, NEDE 13995.

NEDE 13995 proposes extensive use of prefabricated construction modules as a means to reduce construction costs. The savings are achieved through the use of improved tooling and facilities, the reduction of labor congestion, and the shortening of the overall construction schedule for each power plant in the nuclear center.

THIS STUDY

The purpose of this study is to explore further the potential advantages of the use of prefabrication and modular construction. The scope of the study includes the following activities.

- Develop a sequential schedule for modular construction of the nuclear island buildings and turbine building for one typical 1220 MW unit of a power center consisting of four or more units.

- Use the modules developed in NEDE 13995 for the reactor building. Supplement them with similar modules for the remaining buildings.

- Examine the schedule for the heavy lift equipment, including the typical unit and subsequent units at the site.

- Develop the facility requirements for the manufacture of the pre-cast concrete structural modules.

- Prepare recommendations for future study work.

Initial Assumptions

Several premises have been adopted to define the work and to ensure that the results will be consistent with other studies.

- The reactor is a 238-inch BWR/6 with a nominal 1220 MWe capacity.

- The nuclear island design is the General Electric STRIDE concept now being developed in detail.

- The turbine building design is the Braun SAR concept now docketed by the AEC (STN 50-532) as a standard plant facility compatible with the 238 BWR/6.

- Plant construction will include the use of prefabricated modules as described in NEDE 13995.

- The following simplifications will be assumed.

  All engineering is complete.
  Equipment and materials deliveries will not be limiting.
  Construction manpower will not be limiting.

SECTION II

SUMMARY

Following the premises described previously, modular construction schedules have been developed for six major buildings.

- Reactor building
- Fuel building
- Auxiliary building
- Radwaste building
- Control building
- Turbine building

MODULARIZATION

The technique of construction utilizing major prefabricated mechanical and structural steel modules is already in use. Studies and design work for petrochemical projects and field work in refinery construction show that cost and schedule savings can be achieved in specific cases. The use of prefabricated reinforced concrete modules for residential and commercial buildings has been extensively applied. The use of massive concrete modules for seismic Category I structures, however, is new.

Structural Joints

The basic problem in the use of concrete modules is not prefabrication or rigging of the modules themselves. Rather it is the joining of the modules by structural joints that will transmit loads and forces from one module to the next and to the foundation base mat. All tensile and most shear loads must be transmitted through reinforcing steel. In selecting the concrete module configurations for this study, the need to minimize the number and extent of tension joints was considered carefully. In certain cases, critical structures were planned to be cast in place to avoid the structural joint problem.

HEAVY LIFTS

All lifts over 200 tons will be made with a single gantry crane serving probably four to six 1220 MW units. A study was carried out to determine gantry crane usage, assuming that successive units will start construction 12 months apart. The conclusion reached is that crane requirements can be fulfilled by a single large gantry without schedule delays.

CONCRETE MODULE FABRICATION FACILITIES

A large casting area will be required to carry out forming, rebar placing, pouring and curing of the precast concrete modules. An analysis of space requirements was made. It was determined that the casting area will fit between the gantry rails so that all heavy concrete modules can be serviced directly by the gantry without supplemental transporters.

FUTURE

The scope of this study did not allow in-depth studies of many questions that arose. A number of the more significant problems are listed as recommendations for future study.

SECTION III

CONCLUSIONS

In this study, the following conclusions were reached.

- Modular construction is a practicable method for building generating units in a nuclear center.
- The critical buildings for each 1220 MW unit can be completed in about 44 months from the start of excavation to the point of readiness for fuel loading.
- The use of prefabricated reinfored concrete modules is a necessary and practicable step in achieving a 44-month schedule.
- A single, large gantry can handle all of the heavy lifts for a group of generating units starting sequentially at 12-month intervals.
- The casting area can be located so that all heavy concrete modules can be lifted and handled by the gantry without additional transporters.
- The degree of modular prefabrication that can be accomplished appears to be sufficient to offer overall cost savings in nuclear center construction.

SECTION IV

DISCUSSION

GENERAL CONSIDERATIONS

The building designs used in this study are taken from two sources. The nuclear island building configurations are based on STRIDE which is the latest design incorporating the General Electric 238 boiling water reactor (BWR/6). The turbine building design is taken from Braun SAR.

Turbine Building

The turbine building in the C F Braun & Co Safety Analysis Report (Braun SAR) is a standard design engineered to be used with the General Electric 238 boiling water reactor (BWR/6) and standard reactor island concept. The turbine building design includes the building itself and all equipment, components, and systems within the building. Braun SAR is presently under review by the Nuclear Regulatory Commission (Docket Number STN 50-532).

The building is a reinforced concrete and steel structure 238 feet long by 135 feet wide. The basement level is at -24 feet, the operating floor at +50 feet, and the roof at +114 feet. The building is arranged with the long axis radial to the reactor island. One end of the turbine building abuts the auxiliary building and connects to it with a continuous tunnel.

The turbine generator is located at the operating floor level. The turbine is a tandem compound, six flow unit with one high pressure and three low pressure sections. The generator, rated at 1220 MW, is directly coupled to the turbine.

The main condenser is a three shell, multi-pressure unit extending from the basement level to the turbine exhaust hoods. Tube axis is transverse to the turbine axis. Condenser design presumes the use of cooling towers.

The condenser off-gas system consists of mechanical vacuum pumps for "pull-down" or "hogging", two stages of steam jet air ejectors, condensers, recombiners, gas cooler, charcoal adsorbers, and filters - all located at the basement level or the first floor above.

The condensate and feedwater system comprises all equipment needed to pump, heat, and condition condensate as it flows from the hot well through the last heater. Pumping is effected through three stage - condensate pumps, booster pumps, and feedwater pumps.

Each stage consists of three parallel pumps. The boiler feed pumps are turbine driven. All others are motor driven. The heating cycle includes six stages of regenerative feedwater heating. The exchangers for the three low-pressure stages are mounted in the condenser necks. The fourth stage is a deaerating heater located at the operating floor with the storage section immediately below. The fifth and sixth stage heaters are vertical shell and tube exchangers. Deep, mixed bed demineralizers are provided for full-flow condensate polishing.

The various auxiliaries for regeneration of the demineralizer resins are located at the 16 ft floor elevation. These include the regeneration vessels, caustic and acid tanks, hot water tank, ultrasonic resin cleaner, and the necessary pumps. Also at this level are the lube oil reservoir, the hydraulic power unit for the turbine control and bypass valves, the isolated phase bus ducts and bus cooler.

At the (-) 4 feet elevation are the hydrogen analyzer and off-gas sampling system. Here too are most of the auxiliary equipment for the off-gas system such as the glycol cooler, the off-gas heat exchangers, and the recombiners. A rail track spur enters the turbine building at this level.

At the basement level, (-) 24 feet, are the closed cooling water pumps, heat exchangers, chemical treatment tank, and surge tank. Here too are the electric heated auxiliary boiler, service and instrument air compressors and receivers, and the condensate transfer pumps.

Various electrical components are included in the turbine building in addition to power and control cable

systems. These include the 250 volt battery for loads outside the nuclear island, the 6.9 kV switch gear, and the 480 volt switch gear and motor control centers for loads within the turbine building.

All air conditioning fan coil units and exhaust fans are mounted on the roof top. The water chillers and circulation pumps are located at the basement level.

MODULAR CONSTRUCTION

Modular construction is a method of building large structures by assembling and joining smaller sub-structures or modules. The unique feature of modular construction is that it expands the work area, permitting more effective use of labor and tools. This technique has been used extensively in shipbuilding and more recently in the construction of commercial buildings and process plants.

Process Plants

Braun's experience with modular construction includes the following activities.

- Construction planning studies for the Syncrude Tar Sands project at Lake Athabasca in northern Canada.
- Design, fabrication, and installation of pipeway modules for the Imperial Oil Company refinery at Edmonton, Alberta.
- Construction planning for modular construction at the ARCO shale oil plant at Parachute Creek, Colorado.
- Construction planning and detail design of a modularized fertilizer plant for Collier Chemical. The modules will be fabricated at Anacortes, Washington, and installed at Kenai, Alaska.

The modules for process plant construction consist usually of structural steel frames to which are attached equipment, piping, ladders and platforms, instrumentation,

conduit, cable trays, and lighting fixtures. These, in general, are similar to the equipment modules described in NEDE 13995. Concrete modules are not used in process plants.

Concrete Modules

The proposal to use prefabricated reinforced concrete modules for buildings with rigorous seismic design requirements is a new concept. While the module fabrication itself is simple, the problem of the structural joints between modules is more difficult. In essence, most of the joints must be designed to transmit loads from the rebar in one module to the rebar in adjacent modules. This can be done in at least three alternative ways.

- Make the joints wide enough so that rebar loads can be transmitted by simple overlap. The requirements are defined in the ACI standard. This leads to joints as much as 12 feet wide.

- Connect the ends of the protruding rebar together by the Cadweld technique. This method requires very close control of rebar location, which would be difficult to attain.

- Install a continuous plate to the edge of one module. Let the rebar protrude from the adjacent module to meet the plate. In making the joint, fasten the protruding rebar to the plate with B-series Cadwelds. Dimensional tolerances in this case can be controlled rather simply, and rebar location is not critical. The joint in this case is about 4 feet wide. This is a practicable method.

CONSTRUCTION PROCEDURE

The concept of modularized construction envisions the work being carried on concurrently in two adjacent areas at the site. One area is the power plant area. The other is the module fabrication area.

Power Plant Area

The power plant area will consist of four 1220 MW plants arranged in line and serviced by a single large gantry crane with a capacity of about 1000 tons. The parallel gantry rails will be about 400 feet apart placed on opposite sides of the power plant area.

Module Fabrication Area

The modules will be assembled in a module fabrication area arranged conveniently close to the power plant area. The fabrication area will include a number of facilities, such as the following.

- Concrete batch plant
- Concrete module casting yard
- Rebar cutting and bending area
- Steel fabrication shop
- Pipe shop
- Electrical shop
- Nuclear components shop
- Rigging shop
- Paint shop
- Sheetmetal shop
- Garage/motor pool area
- Condenser assembly area
- Turbine-Generator assembly area
- Warehouses
- Open storage areas

Construction Sequences

The general construction procedure for each power plant will start with excavation work for the various building foundations. Next, the base mats are constructed. Then the first course of exterior and interior walls are brought in as prefabricated modules and placed on the mats. Structural joints to connect the wall modules are constructed and basement level equipment modules are rigged into place. At this point the second level floor slabs are brought in and installed.

This procedure is continued floor by floor. In each case, the equipment, piping, and other mechanical modules are installed before floor above is placed in position.

Successive courses of exterior and interior walls are rigged into position when needed to support the structures above.

Work starts quickly on electrical installations, piping connections, and other components that cannot be modularized. Here again the sequence is from the bottom up. By extensive use of prefabrication, work areas become available quickly and labor congestion is reduced.

Finally, the superstructure and roof modules are installed. Clean-up work is completed, systems are flushed, and pre-operational testing is carried out.

CONSTRUCTION SCHEDULES

Construction schedules for the five key buildings in the nuclear island and for the turbine building are presented in Figures 4-8 through 4-13. A schedule for the diesel generator building was not prepared since the structure is relatively simple and does not fall in the critical path of construction. In the building schedules shown, each construction step is labeled and numbered consecutively.

In developing the schedules, the sequence was established by building from the bottom up in a rational fashion. Duration of the work bars was determined by analysis of the work to be done and by cross checking with conventional construction schedules. Coordination schedules were also prepared to ensure freedom of interference between work in adjacent buildings. In the case of unmodularized work, which includes for example much of the electrical work, heavy reliance was placed on comparable conventional schedules.

Modules for the reactor building are described in NEDE 13995. Modules for the other buildings were selected with due regard for size and for special requirements. For example, the turbine pedestal cap is cast in place to ensure complete rigidity.

Arrangement drawings showing the location of important structural modules are given in Figures 4-1 through 4-7. In these drawings, the modules are identified with numbers corresponding to specific steps in the construction schedules.

A summary of weights of structural modules is given for the reactor building, fuel building, auxiliary building, and turbine building in Tables 4-1 through 4-4. Structural modules for the radwaste and control buildings are similar.

GANTRY CRANE

The 1000 ton gantry crane will be used to rig all modules larger than 200 tons and many of the smaller units as well. A study was made to determine whether a single gantry could perform all heavy lifts. All major lifts for a single power plant were plotted on a schedule sheet. Then the requirements were plotted for the succeeding units, each starting 12 months after the one ahead of it.

The study showed that a single gantry is sufficient. No operation conflicts with the schedules shown by more than a fraction of a week. In addition, it was found that the gantry will also be available for transporting and rigging some of the smaller modules.

CASTING YARD

The casting yard for fabrication of the reinforced concrete modules is an extensive facility. It consists of a concrete paved area roughly 400 feet wide by 1300 feet long. The pavement will be used to form one face of the slabs poured on it. It is envisioned that most of vertical forms will be reusable and made of steel.

In module fabrication, the cut and bent rebar will be positioned. The vertical forms will be set up. Then the concrete will be poured. In the case of flat slabs of similar shape, it is planned to pour them one on top of another to a height of about 8 feet. The top of one slab, troweled smooth and coated with a mold releasing compound becomes the bottom form for the slab above.

Most of the heavy modules are concrete. For this reason, it is planned that the casting yard will be located between the gantry rails where the modules can be lifted directly without the use of transporters.

CONSTRUCTION LABOR REQUIREMENTS

The use of modular construction will reduce overall labor requirements as compared to conventional construction. The advantage arises from the improved productivity in module fabrication. Better tooling, accessibility to the work, repetitive work tasks, and to some extent improved morale, all contribute to high productivity in module fabrication.

The overall effects of modularization on direct construction labor can be arrived at in two steps. First, the degree of modularization is determined. This breaks the construction labor into site work and module fabrication work. Second, the productivity improvement is determined for the module fabrication work. It is assumed that productivity for site work is the same as for conventional construction.

Table 4-5 shows the division of work between the construction site and the module fabrication area. The work is classified first by building, and second, by labor type or discipline. The division of work is based on work units or, in other words, a productivity factor of 1.0.

Table 4-6 shows also the expected labor productivity for that portion of the work done in the module fabrication area.

FUTURE WORK

During the course of this study, many questions arose which could not be investigated in detail. A few of these should be studied further.

Structural Joints

Design of the structural joints between adjacent concrete modules requires further investigation. A series of typical joints should be studied carefully to determine optimum designs with regard to cost, schedule, and quality control.

Electrical

Very little can be done by modularized construction to improve the efficiency of electrical labor. A careful study should be made of the complete electrical installation procedure. The purpose should be first to identify the specific operations that require large manhour expenditures. Then the potential solutions should be explored such as improved tooling, better materials handling, more convenient drawing presentation, and improved component design.

Mechanical Module Fabrication

The types of work to be done in the fabrication of mechanical modules is reasonably apparent. A more detailed study should be made, however, of the flow of work and the specific needs for space, shelter, tooling, transporters, and handling equipment.

Plant Arrangement

In this study, the concept of modularization was adapted to an available design prepared for conventional construction. It seems likely that further advantages in cost and schedule could be achieved if the basic design of the buildings and their arrangement were optimized for modular construction. A conceptual design study of this type aimed specifically at modular construction should be made.

TABLE 4-1
STRUCTURAL MODULES
REACTOR BUILDING

SCHEDULE	MODULE	DESCRIPTION	TON
R-5	1	Reactor pedestal and weir wall frame.	650
R-6	SB-1	Shield building wall	770
R-8	3	Reactor shield wall (with concrete in place)	970
R-9	8	Drywell steel shell, lower course	510
R-12	SB-2	Shield building wall	770
R-14	9	Drywell steel shell, upper course	600
R-16	SB-3	Shield building wall	770
R-17	C-2	Containment liner, first half	310
R-23	SB-4	Shield building wall	770
R-24	C-2	Containment liner, second half	310
R-31	15	RWCU pump rooms	760
R-31	18	Steam tunnel roof and walls	830
R-33	21	Fuel service pools	820
R-33	22	RWCU tank and valve rooms	590
R-37	23	Composite structures over drywell	790
R-37	24	RWCU equipment rooms	390
R-39	SB-5	Shield building wall	770
R-39	SB-6	Shield building wall	770
R-39	SB-7	Shield building wall	770
R-46	C-3	Containment liner	220
R-46	C-4	Containment liner	380
R-47	C-5	Containment dome	360
R-48	SB-8	Shield building wall	620
R-48	SB-9	Shield building dome	900

NOTE These modules are described in NEDE 13995.

TABLE 4-2
STRUCTURAL MODULES
FUEL BUILDING

SCHEDULE	DESCRIPTION	TONS AVERAGE	TONS MAXIMUM
F-2	15 flat wall panels	168	384
	4 ell-shape wall panels	197	324
F-7	4 floor slabs	75	112
F-9	15 floor slabs	84	222
F-12	7 flat wall panels	82	202
F-15	12 floor slabs	107	180
F-18	11 flat wall panels	146	162
	5 U-shape wall panels	186	235
F-19	8 floor slabs	35	60
F-22	9 roof slabs	186	235

TABLE 4-3
STRUCTURAL MODULES
AUXILIARY BUILDING

SCHEDULE	DESCRIPTION	TONS AVERAGE	TONS MAXIMUM
A-3	33 flat wall panels	190	500
A-6	14 floor slabs	106	174
A-7	17 flat wall panels	128	172
A-9	4 floor slabs	95	95
A-10	2 floor slabs	510	564
A-12	8 floor slabs	92	153
A-14	10 flat wall panels	209	331
A-16	14 floor slabs	80	153
A-19	2 roof slabs	440	440
A-21	14 roof slabs	90	160
A-22	2 roof slabs	155	155

TABLE 4-2A
MECHANICAL, PIPING, AND ELECTRICAL MODULES
FUEL BUILDING

The list below describes the typical systems, equipment, and components that will be assembled into prefabricated modules. Each module will be designed to be as complete as possible. The determination of number of modules, module size, and details of design is beyond the scope of this study.

SCHEDULE		DESCRIPTION
F-5	a	Liquid waste holding tank
	b	Transfer pump
	c	CRD water drive pump and filters
	d	FPCCU filter demineralizer backwash receiving tank
	e	FPCCU pumps
	f	FPCCU pump area panel
	g	Fuel building sample station
	h	Piping
F-8	a	Standby gas treatment system
	b	Holding pumps
	c	Piping
F-9	a	FPCCU drain tank
	b	Filter demineralizers
	c	Compressor
	d	Piping
F-11	a	Standby gas treatment system
	b	Piping
F-16	a	Closed cooling water pumps
	b	Motor control centers and electrical
	c	Instrumentation
F-20	a	HVAC units
	b	CCW heat exchangers

TABLE 4-3A
MECHANICAL, PIPING, AND ELECTRICAL MODULES
AUXILIARY BUILDING

The list below describes the typical systems, equipment and components that will be assembled into prefabricated modules. Each module will be designed to be as complete as possible. The determination of number of modules, module size, and details of design is beyond the scope of this study.

SCHEDULE	DESCRIPTION
A-5	a LPCS pump b RHR pumps c HPCS pump d RCIC pump e Instrument racks f Piping
A-8	a RWCU pumps b Piping c Cable trays d Electric panels
A-13	Electric equipment room modules
A-15	Feedwater and main steam piping
A-17	a Chilled water pumps b HVAC chillers c Recombiners d Piping

TABLE 4-4
STRUCTURAL MODULES
TURBINE BUILDING

SCHEDULE	DESCRIPTION	TONS AVERAGE	TONS MAXIMUM
T-5	8 flat wall panels	248	345
T-6	3 flat wall panels	364	458
T-8	17 flat wall panels	310	458
T-9	9 flat wall panels	361	386
T-11	11 flat wall panels	319	483
T-13	10 flat wall panels	227	245
T-18	12 floor slabs	176	230
T-25	18 floor slabs	242	420
T-28	4 floor slabs	132	132
T-29	2 flat wall panels	252	252
T-30	6 flat wall panels	267	405
T-32) - T-37)	12 floor slabs	132	196
T-41	18 floor slabs	156	205
T-42	8 floor slabs	126	144
T-43	9 flat wall panels	157	227
T-47	27 flat wall panels	181	380
T-48) - T-49)	6 flat wall panels	287	427
T-50	6 flat wall panels	200	273
T-53	8 floor slabs	323	487
T-54	3 floor slabs	186	192
T-57	38 floor slabs	207	447
T-65	4 flat wall panels	132	132
T-70	14 flat wall panels	122	140
T-72	12 roof slabs	167	230

TABLE 4-4A (CONTINUED)
MECHANICAL, PIPING, AND ELECTRICAL MODULES
TURBINE BUILDING

The list below describes the typical systems, equipment and components that will be assembled into prefabricated modules. Each module will be designed to be as complete as possible. The determination of number of modules, module size, and details of design is beyond the scope of this study.

SCHEDULE	DESCRIPTION
T-4	Maximum length prefabricated circulating water pipe runs.
T-15	a HVAC chillers and pumps b Seal steam condenser c Vacuum pumps d Sampling system e Off-gas dryers f Dryer regenerators g Condensate pumps h Condensate transfer pumps i Closed cooling water exchangers j Closed cooling water pumps k Service and instrument air compressors and equipment l Closed cooling water treatment tank and surge tank m Electric auxiliary boiler n Feedwater booster pumps
T-16	Radwaste pipe modules
T-22	Off-gas hold-up piping
T-24	First level regulated electric chase cable trays
T-26	a Steam jet air ejectors b Off-gas coolers
T-27	a Feed pump turbine condensers b 480 volt switch gear c 480 volt motor control centers d 6.9 kV switch gear e Off-gas sampling and analyzing

TABLE 4-4A
MECHANICAL, PIPING, AND ELECTRICAL MODULES
TURBINE BUILDING

SCHEDULE	DESCRIPTION
T-33	Main condensers, complete with tubes
T-35	a Off-gas adsorbers and piping b Off-gas coolers and filters
T-36	Second level regulated electric chase cable trays
T-38	Condenser circulating water piping
T-48	a 6.9 kV switch gear b Demineralizer regeneration equipment c Regeneration chemical feed tanks and pumps d Reactor feed pumps and turbines e Turbine lube oil tank and equipment f Hydraulic power unit
T-51	Isolated phase bus duct
T-52	Steam piping
T-55	Stop-control valves and piping
T-56	Piping to moisture separators
T-61	a Steam turbine sections b Generator, assembled
T-62	Feedwater and steam piping to auxiliary building
T-68	a Seal steam generator b Piping modules c Cable tray modules
T-74	Roof-top HVAC equipment

TABLE 4-5
CONSTRUCTION LABOR

	DIVISION OF WORK	
	MODULE FABRICATION PERCENTAGE	SITE WORK PERCENTAGE
Reactor Building		
Civil/Structural	65	35
Mechanical/Piping	40	60
Electrical	10	90
Fuel Building		
Civil/Structural	40	60
Mechanical/Piping	35	65
Electrical	10	90
Auxiliary Building		
Civil/Structural	60	40
Mechanical/Piping	35	65
Electrical	10	90
Radwaste Building		
Civil/Structural	50	50
Mechanical/Piping	20	80
Electrical	10	90
Control Building		
Civil/Structural	70	30
Mechanical/Piping	30	70
Electrical	10	90
Turbine Building		
Civil/Structural	60	40
Mechanical/Piping	40	60
Electrical	10	90

TABLE 4-6
LABOR PRODUCTIVITY FOR MODULE FABRICATION

TYPE OF WORK	PRODUCTIVITY FACTOR*
Civil/Structural	4.0
Mechanical/Piping	2.0
Electrical	1.5

*Based on productivity of 1.0 for conventional nuclear plant construction.

REFERENCES

1 General Electric Report NEDE-13995-1, "An Investigation of Novel Construction Methods for Nuclear Power Centers" Volume 1.

2 General Electric Report NEDE-13995-2, "An Investigation of Novel Construction Methods for Nuclear Power Centers" Volume 2.

3 Braun Safety Analysis Report, NRC Docket No STN 50-532, October 8, 1974

4 C F Braun & Co, "Modular Construction", to be published by Engineering News Record.

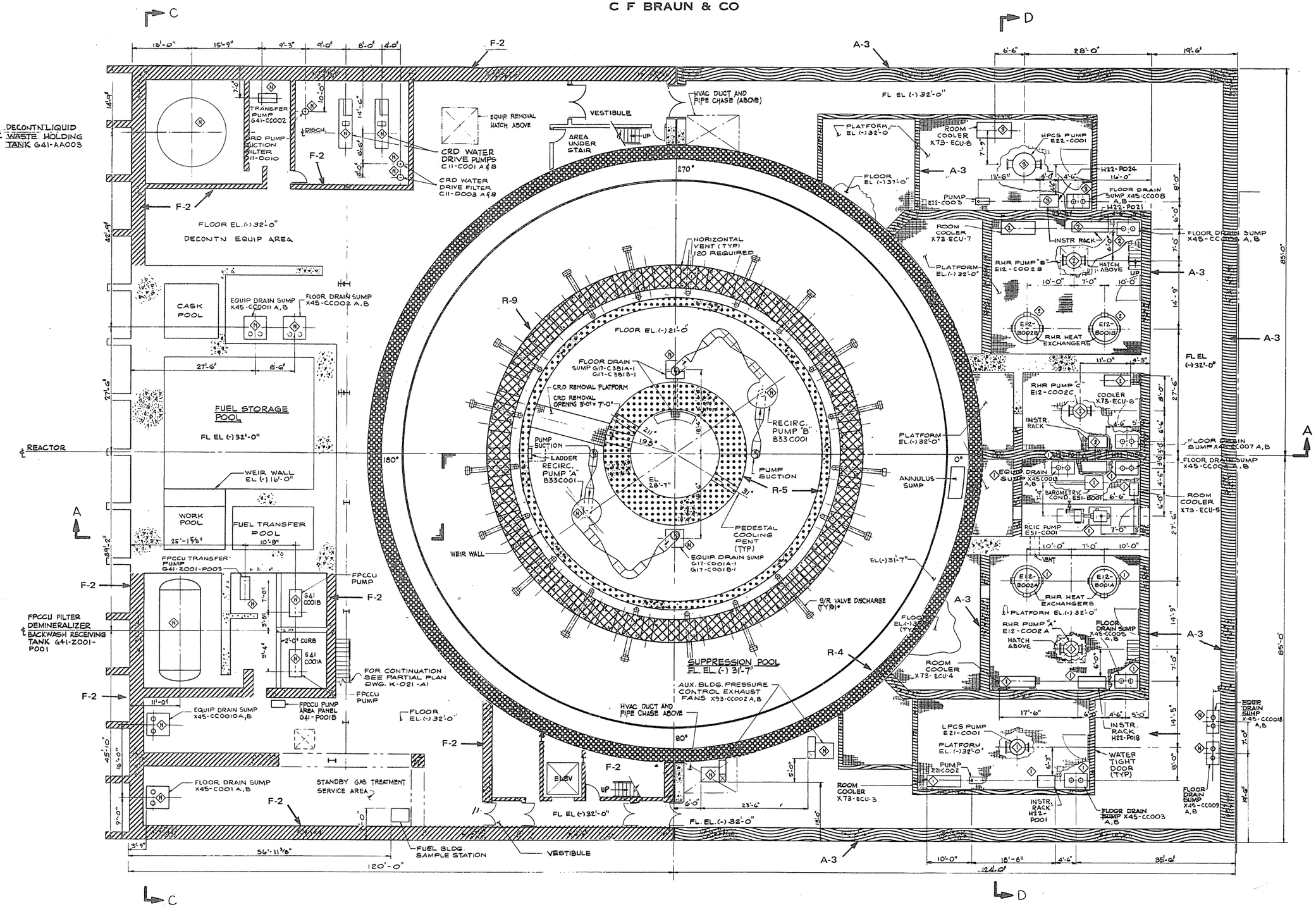

REACTOR, AUXILIARY, & FUEL BUILDINGS
FIGURE 4–1

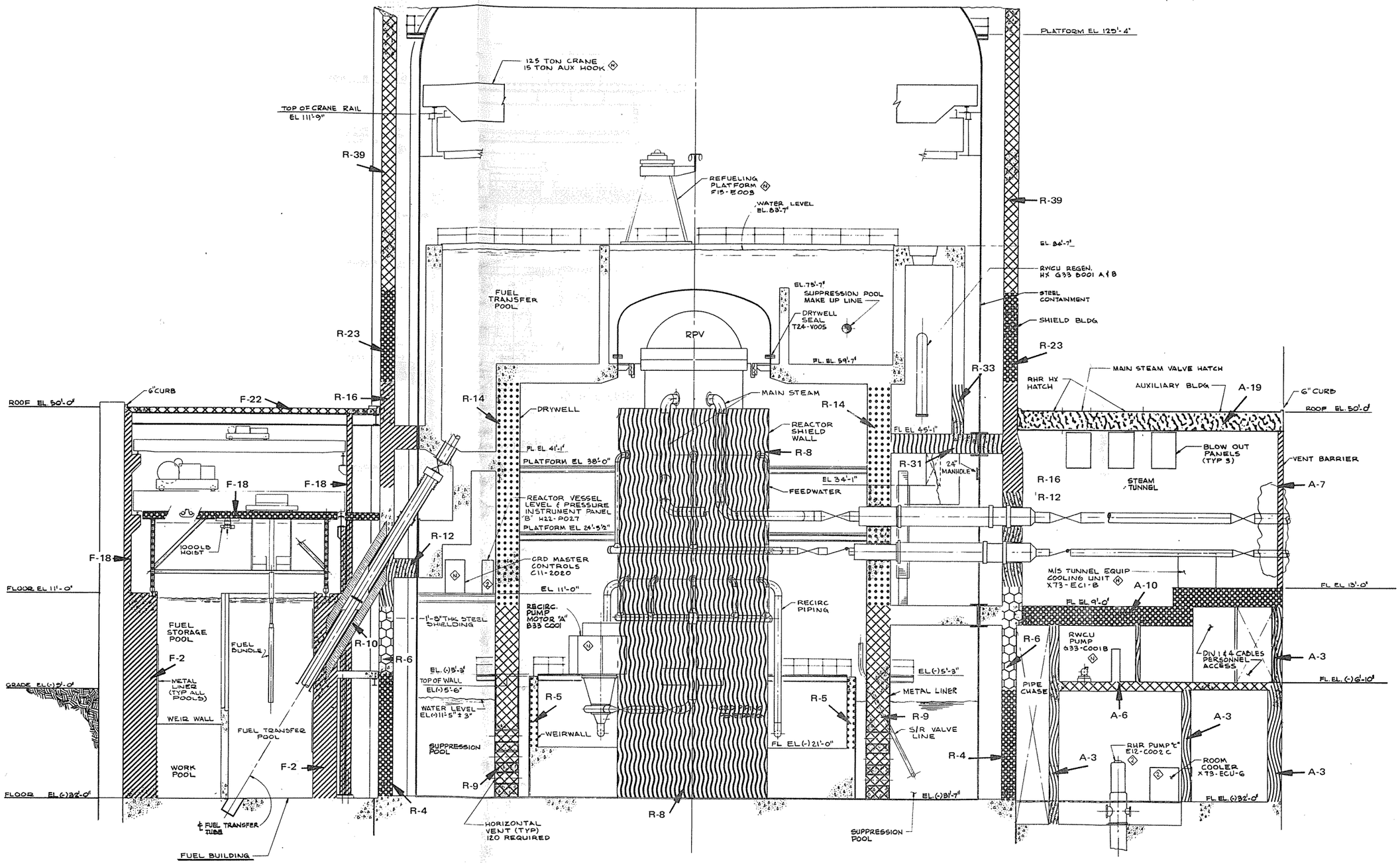

SECTION A-A
LOOKING NORTH

REACTOR, FUEL, AND AUXILIARY BUILDINGS
FIGURE 4-2

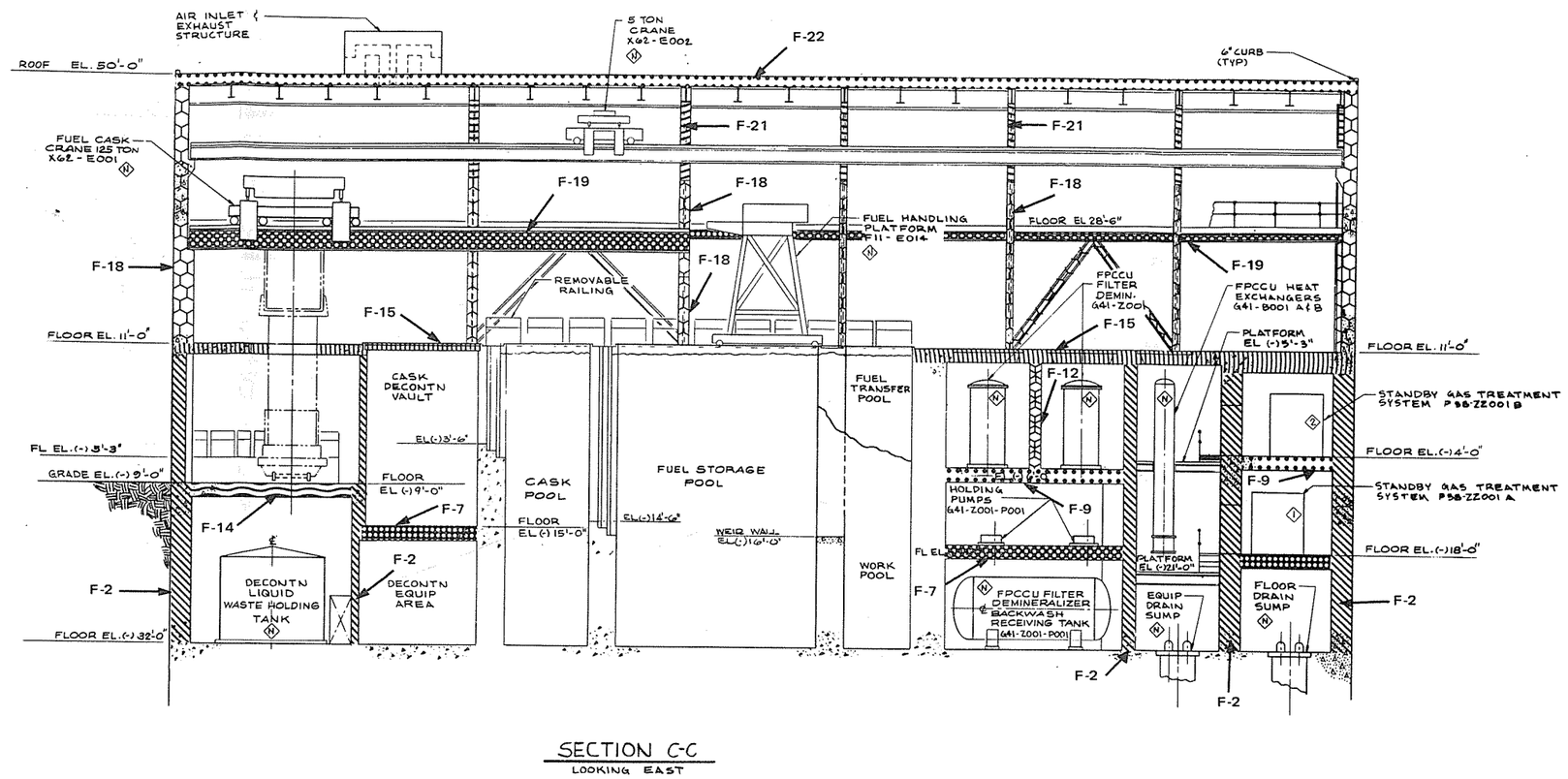

SECTION C-C
LOOKING EAST

FUEL BUILDING
FIGURE 4–3

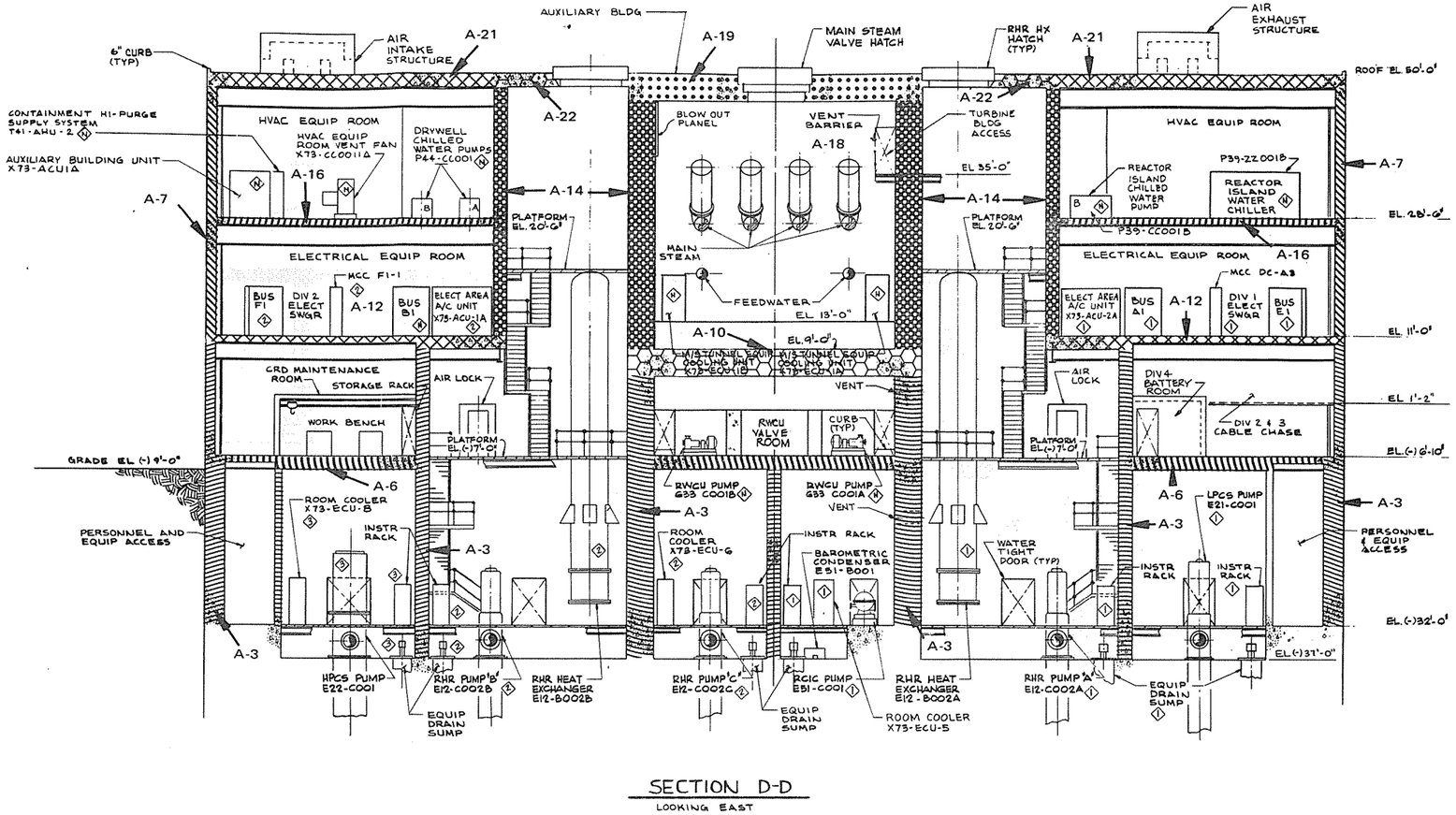

SECTION D-D
LOOKING EAST

AUXILIARY BUILDING
FIGURE 4-4

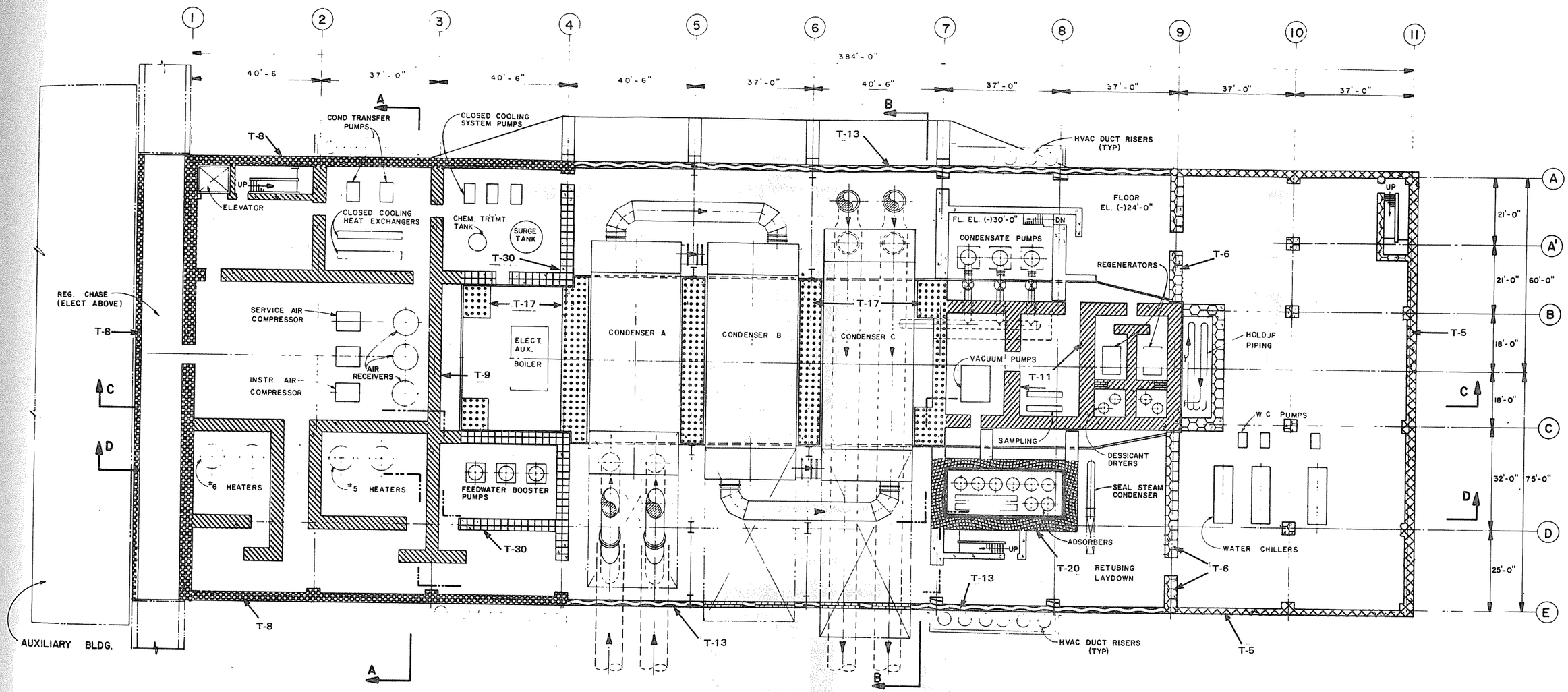

TURBINE BUILDING
ELEV – 24 FT

FIGURE 4–5

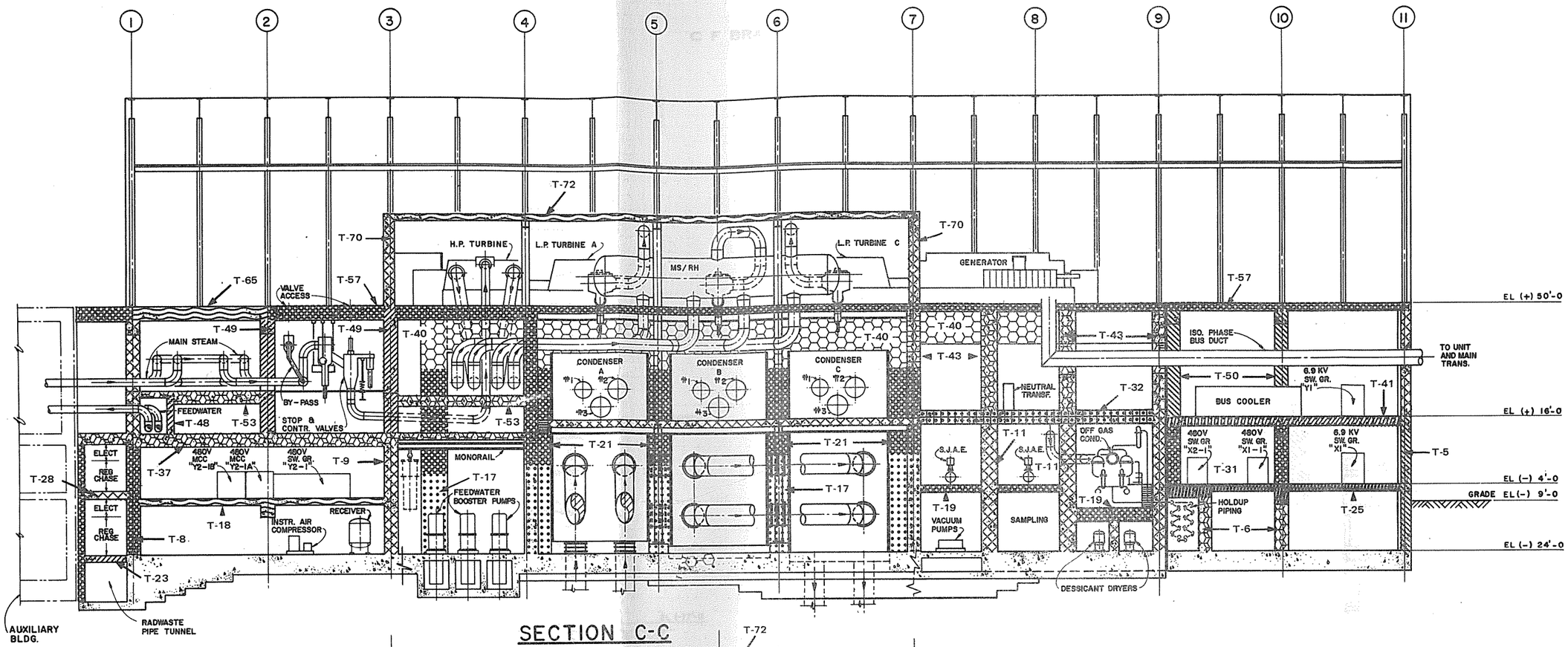

SECTION C-C

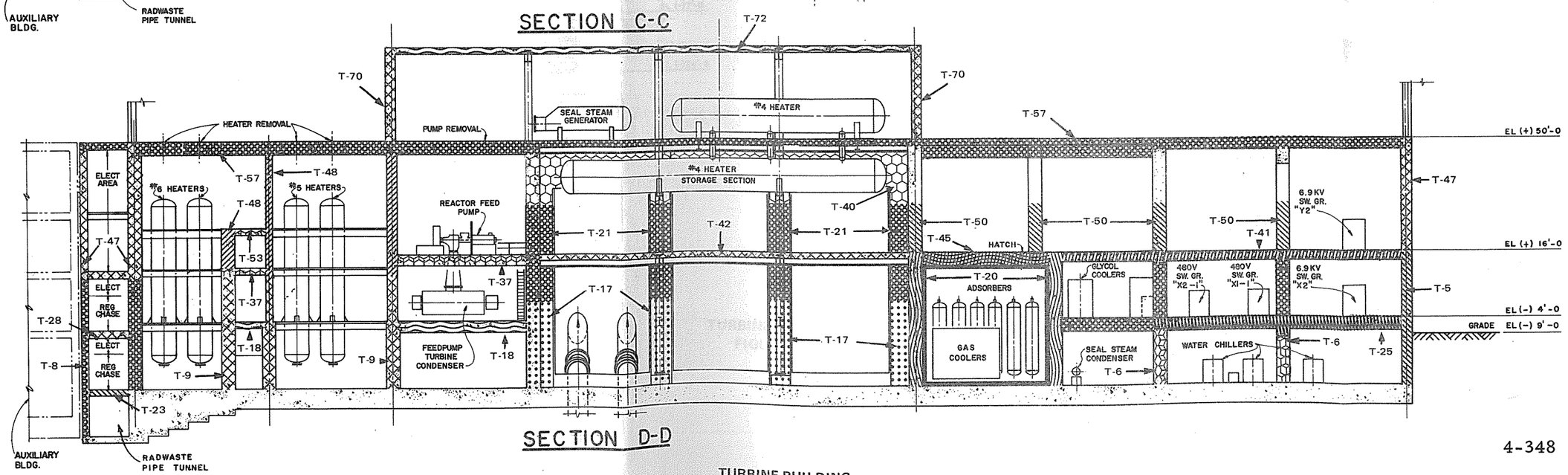

SECTION D-D

TURBINE BUILDING
FIGURE 4-6

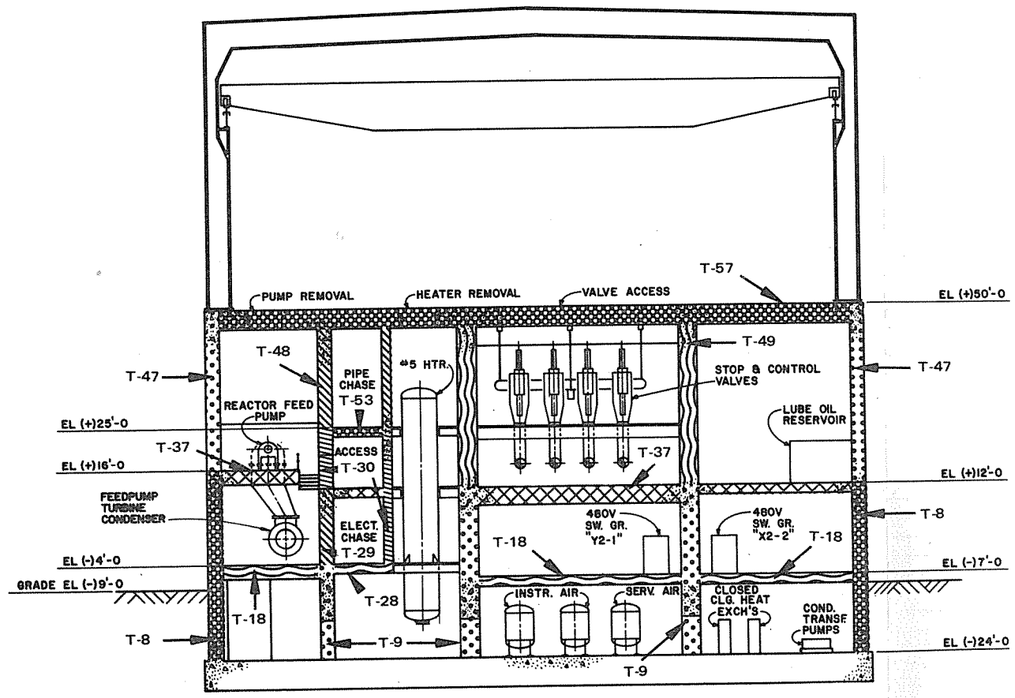

SECTION A-A

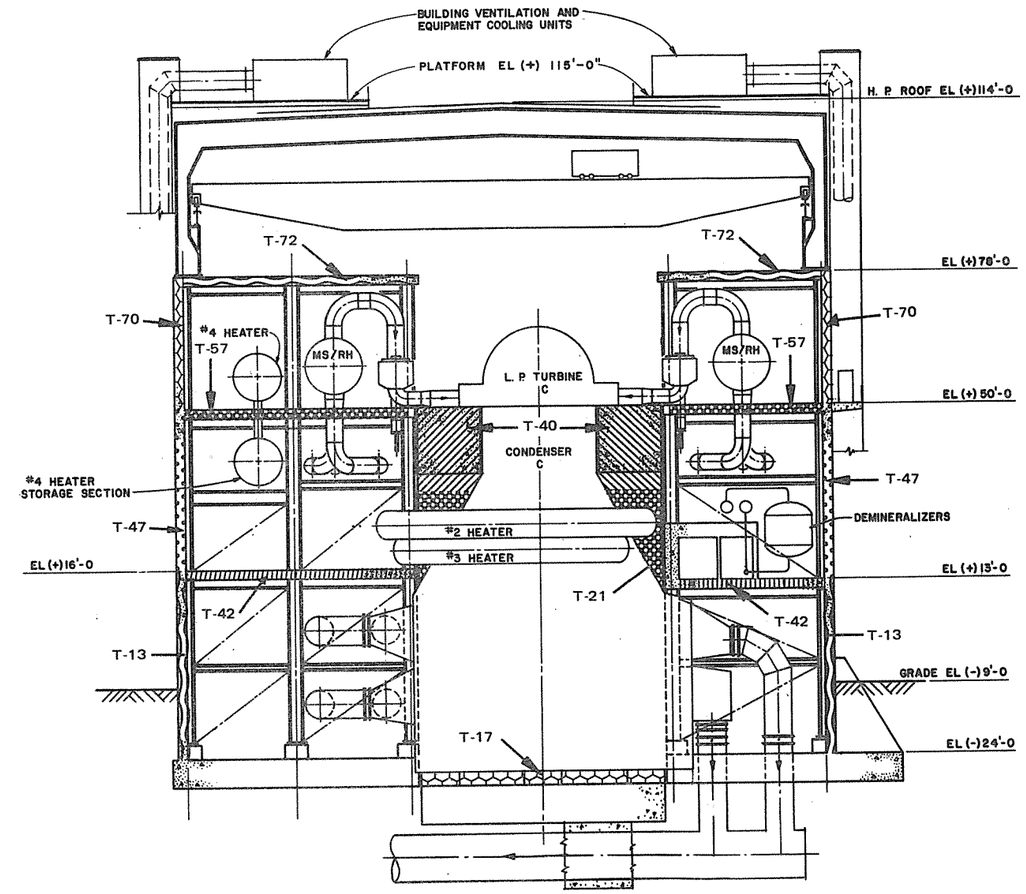

SECTION B-B

TURBINE BUILDING
FIGURE 4–7

C F BRAUN & CO

General Electric Company

San Jose

REACTOR BUILDING SCHEDULE

MODULAR CONSTRUCTION

Project 5003–P

March 1, 1975

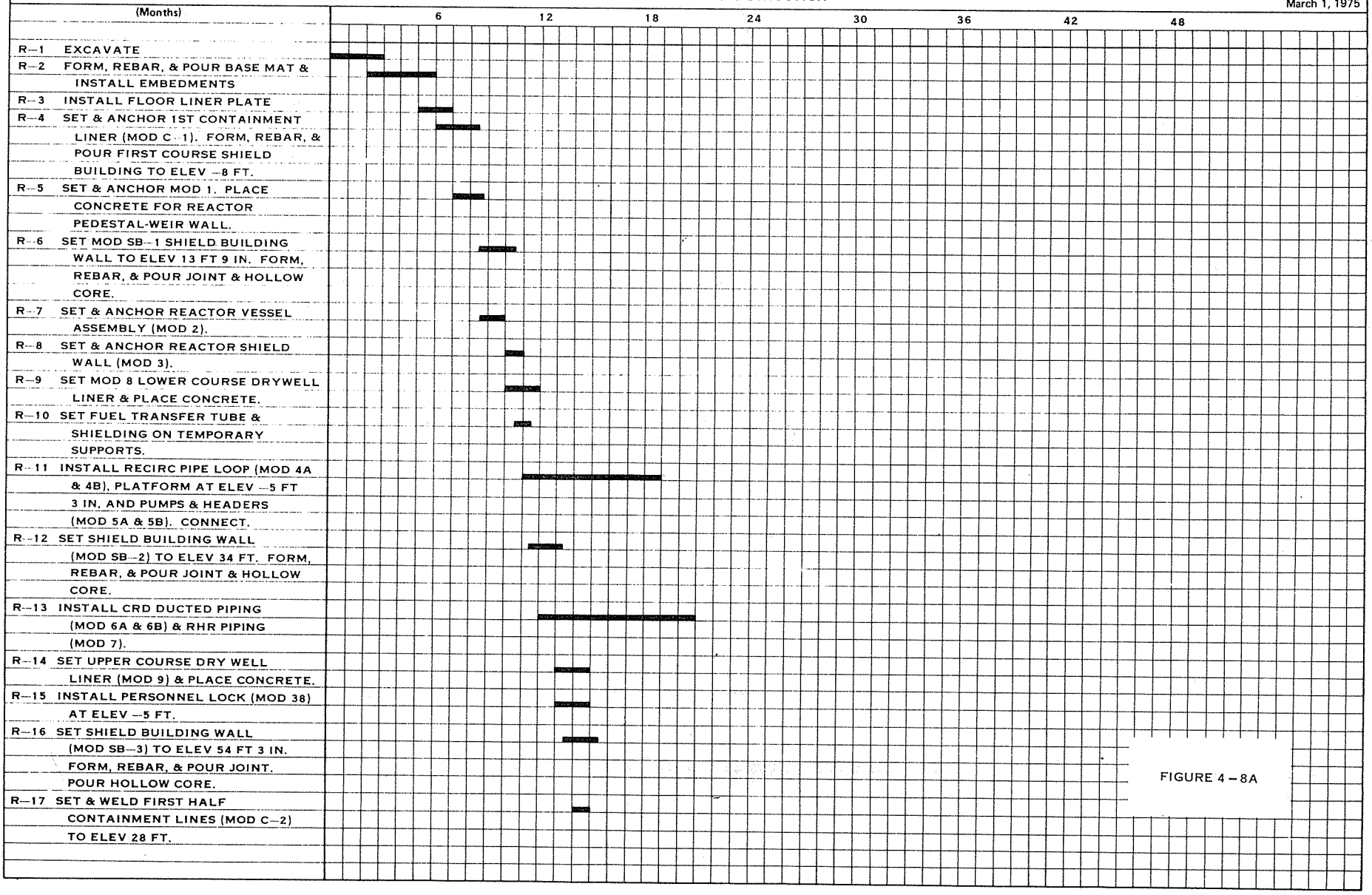

FIGURE 4 – 8A

C F BRAUN & CO

General Electric Company

San Jose

REACTOR BUILDING SCHEDULE

MODULAR CONSTRUCTION

Project 5003—P

March 1, 1975

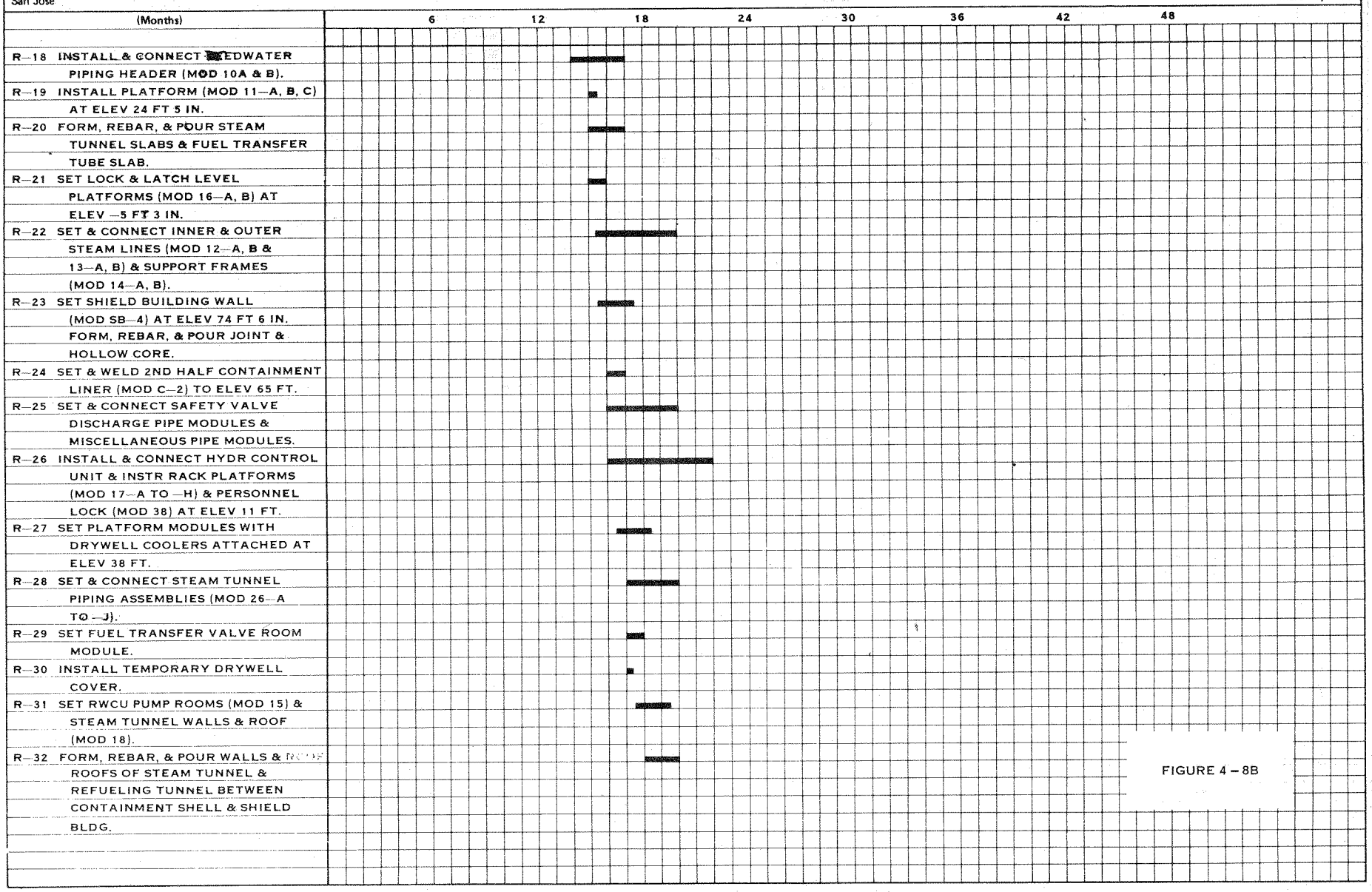

FIGURE 4 – 8B

C F BRAUN & CO

General Electric Company

San Jose

REACTOR BUILDING SCHEDULE

MODULAR CONSTRUCTION

Project 5003—P

March 1, 1975

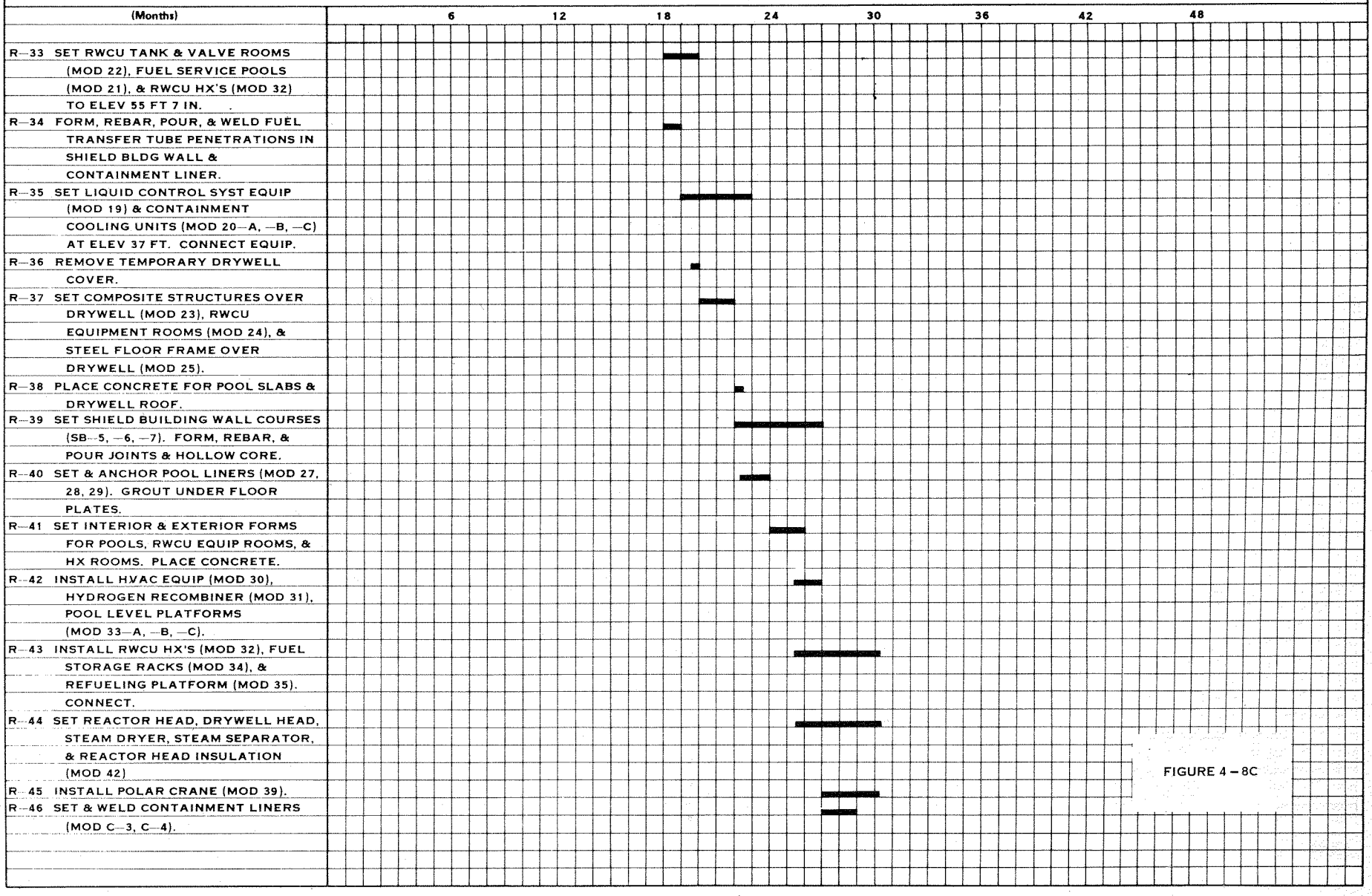

FIGURE 4 – 8C

C F BRAUN & CO

General Electric Company

San Jose

REACTOR BUILDING SCHEDULE

MODULAR CONSTRUCTION

Project 5003–P

March 1, 1975

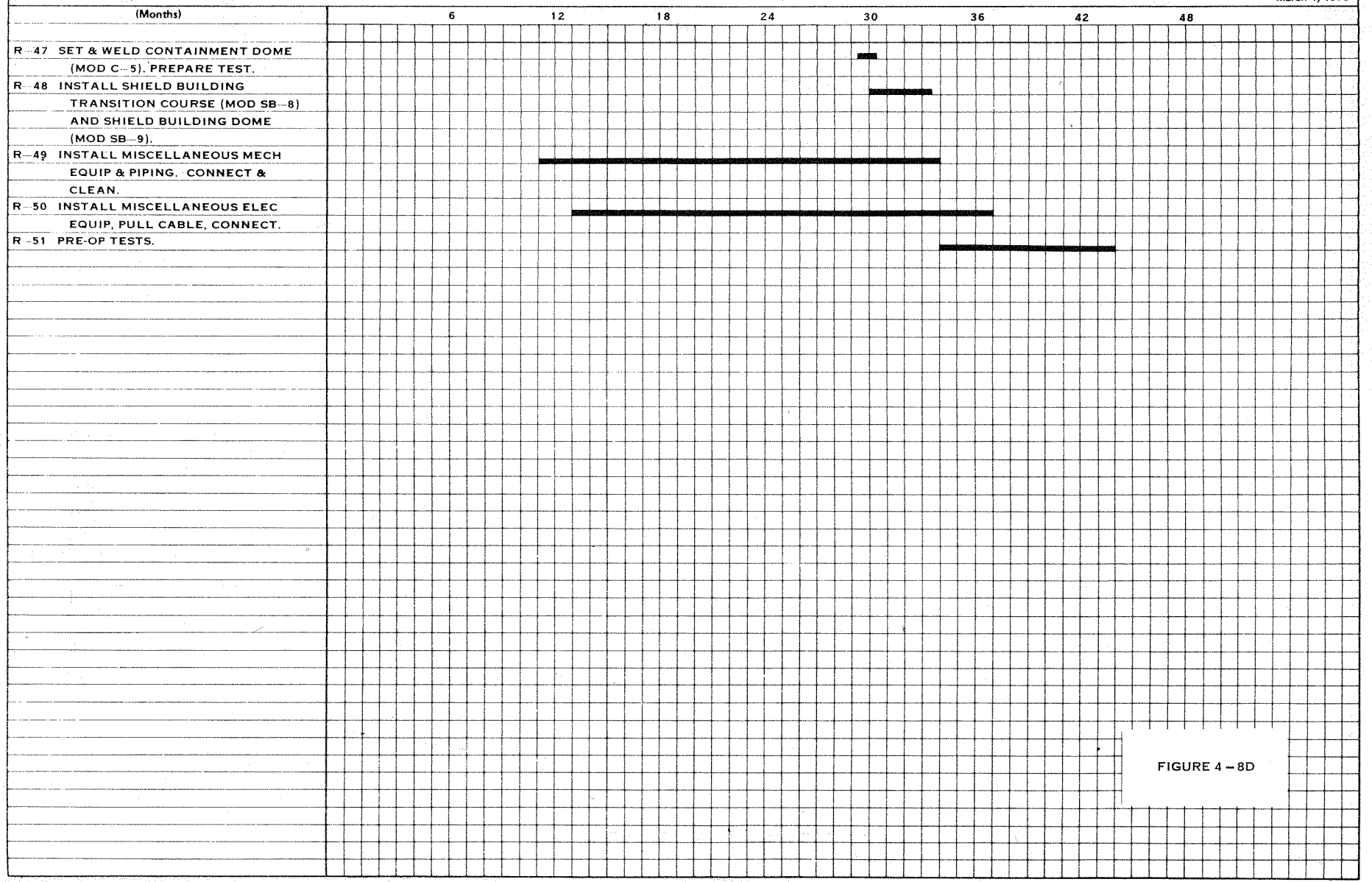

FIGURE 4 – 8D

C F BRAUN & CO

General Electric Company

San Jose

FUEL BUILDING SCHEDULE

MODULAR CONSTRUCTION

Project 5003—P

March 1, 1975

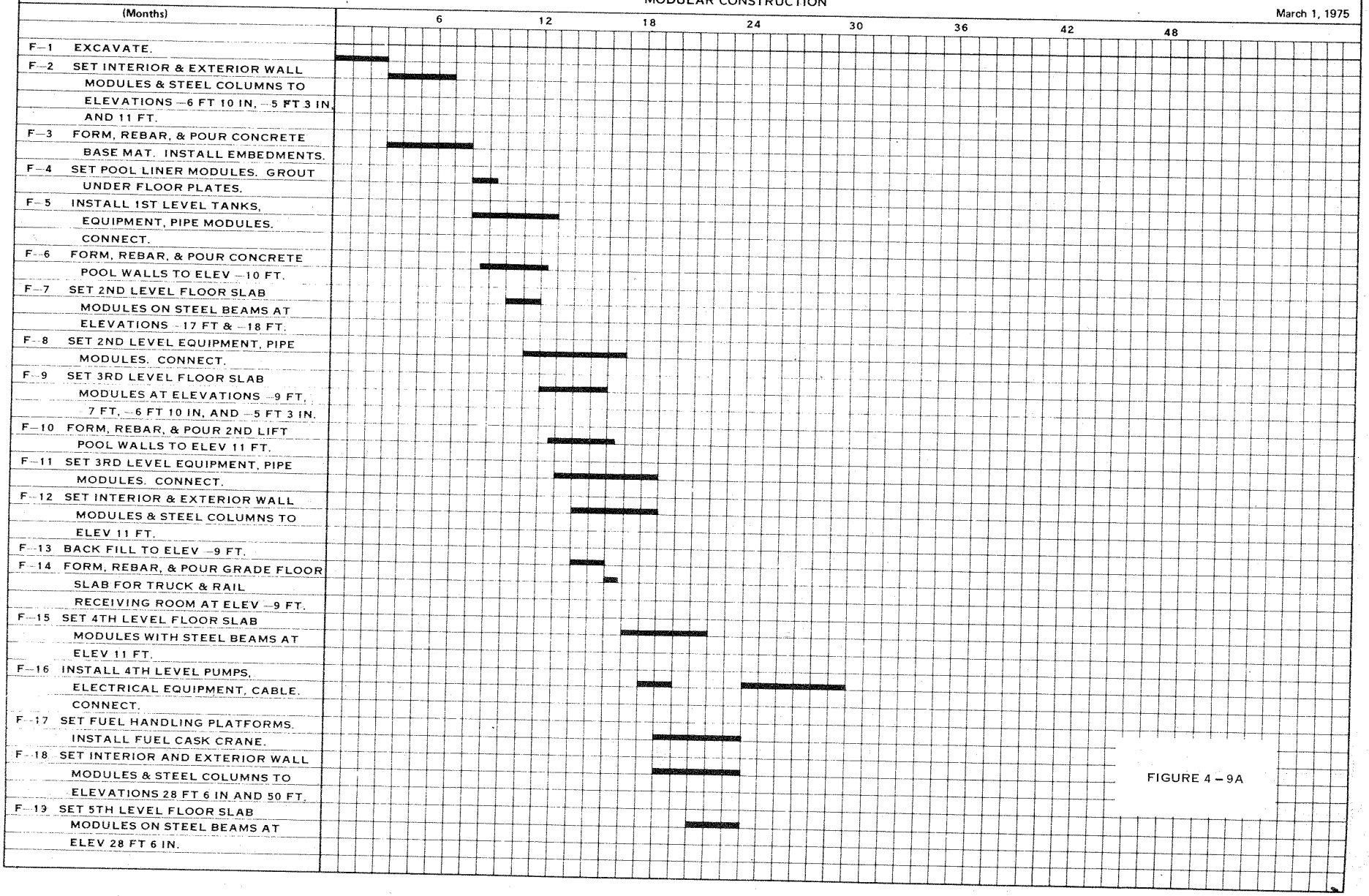

FIGURE 4 – 9A

C F BRAUN & CO

General Electric Company

San Jose

Project 5003–P

March 1, 1975

FUEL BUILDING SCHEDULE
MODULAR CONSTRUCTION

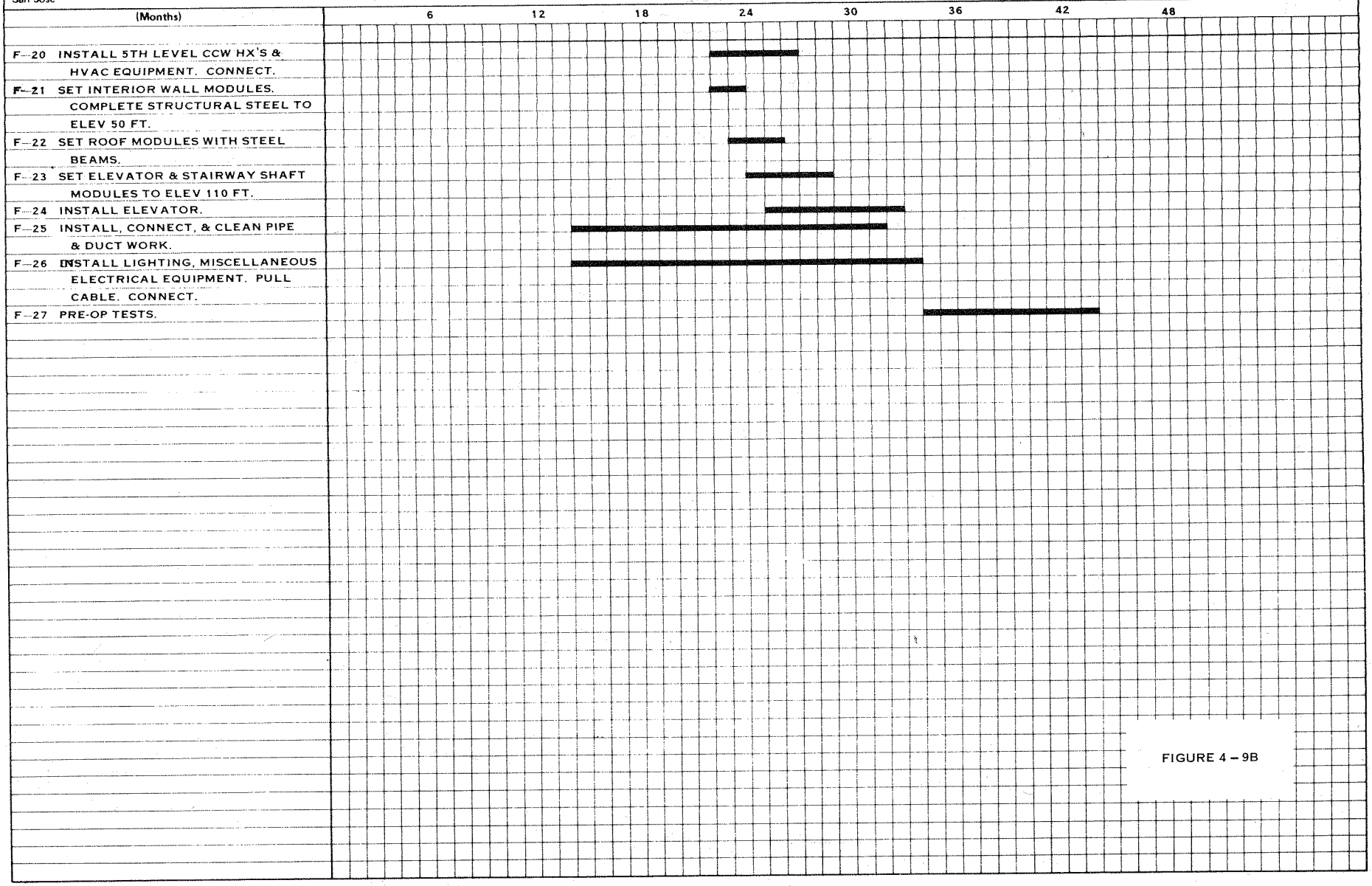

FIGURE 4 – 9B

C F BRAUN & CO

General Electric Company

San Jose

AUXILIARY BUILDING SCHEDULE

MODULAR CONSTRUCTION

Project 5003–P

March 1, 1975

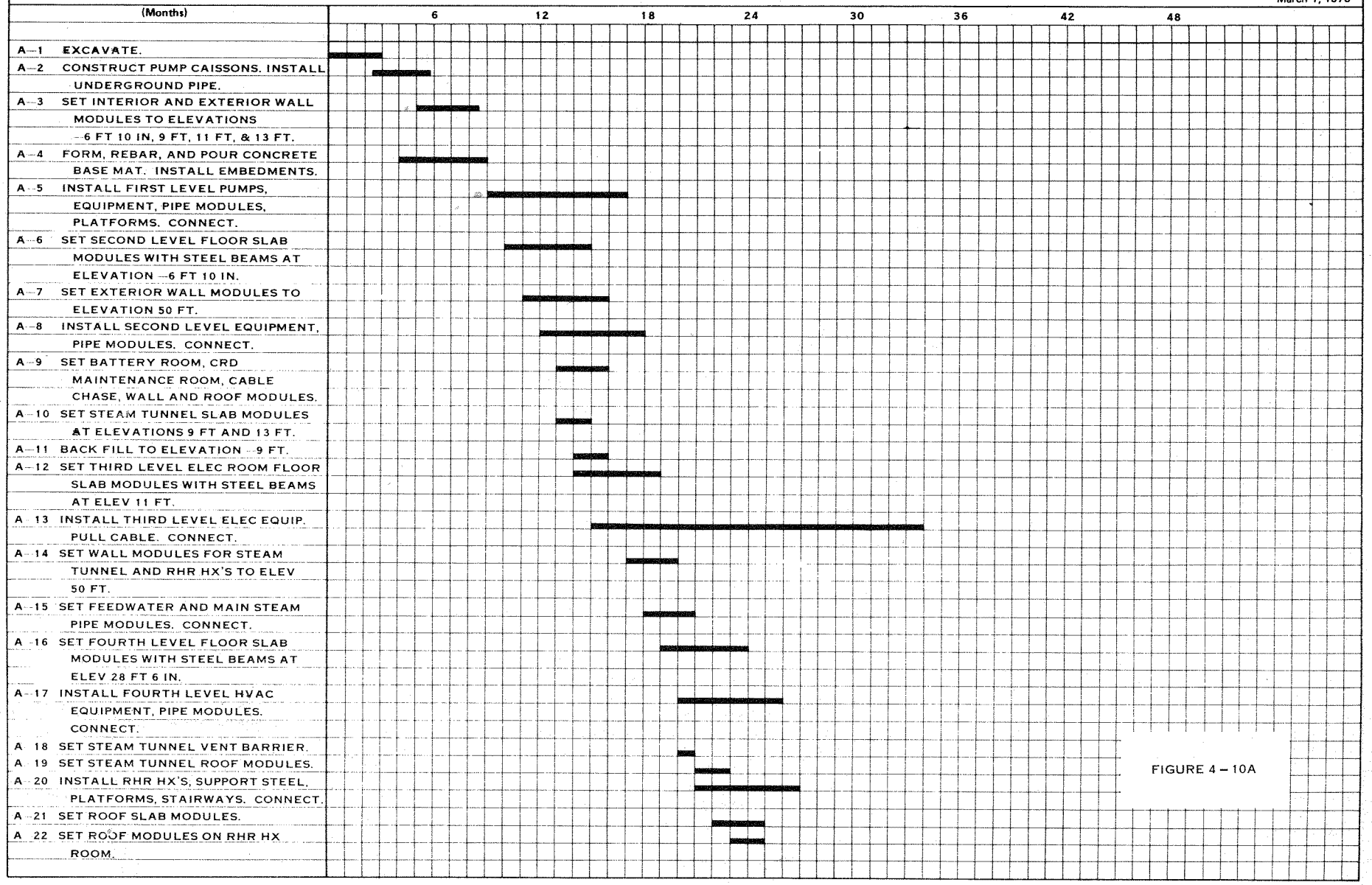

FIGURE 4 – 10A

C F BRAUN & CO

General Electric Company

San Jose

AUXILIARY BUILDING SCHEDULE

MODULAR CONSTRUCTION

Project 5003–P

March 1, 1975

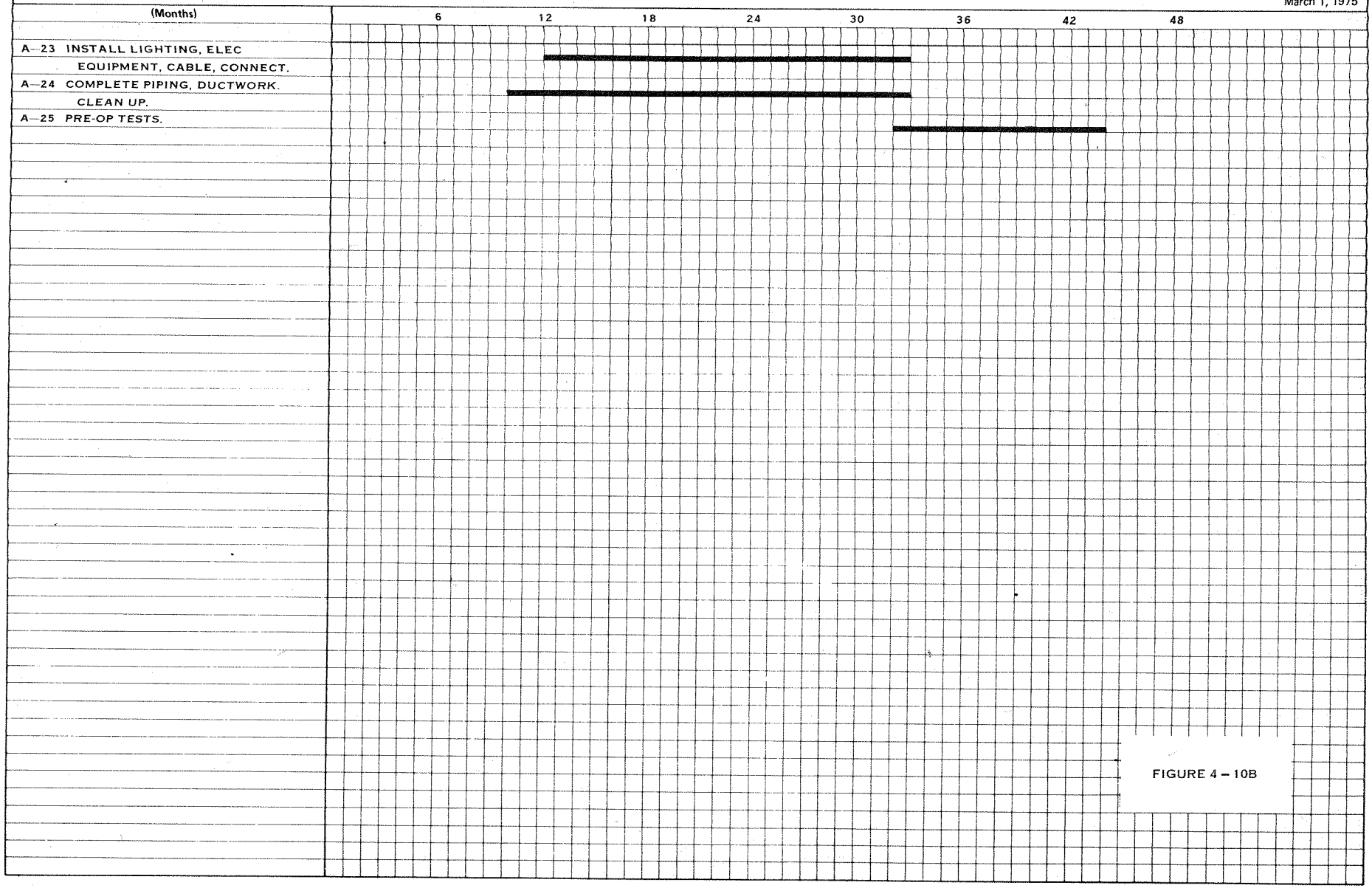

FIGURE 4 – 10B

C F BRAUN & CO

General Electric Company

San Jose

RADWASTE BUILDING SCHEDULE

MODULAR CONSTRUCTION

Project 5003–P

March 1, 1975

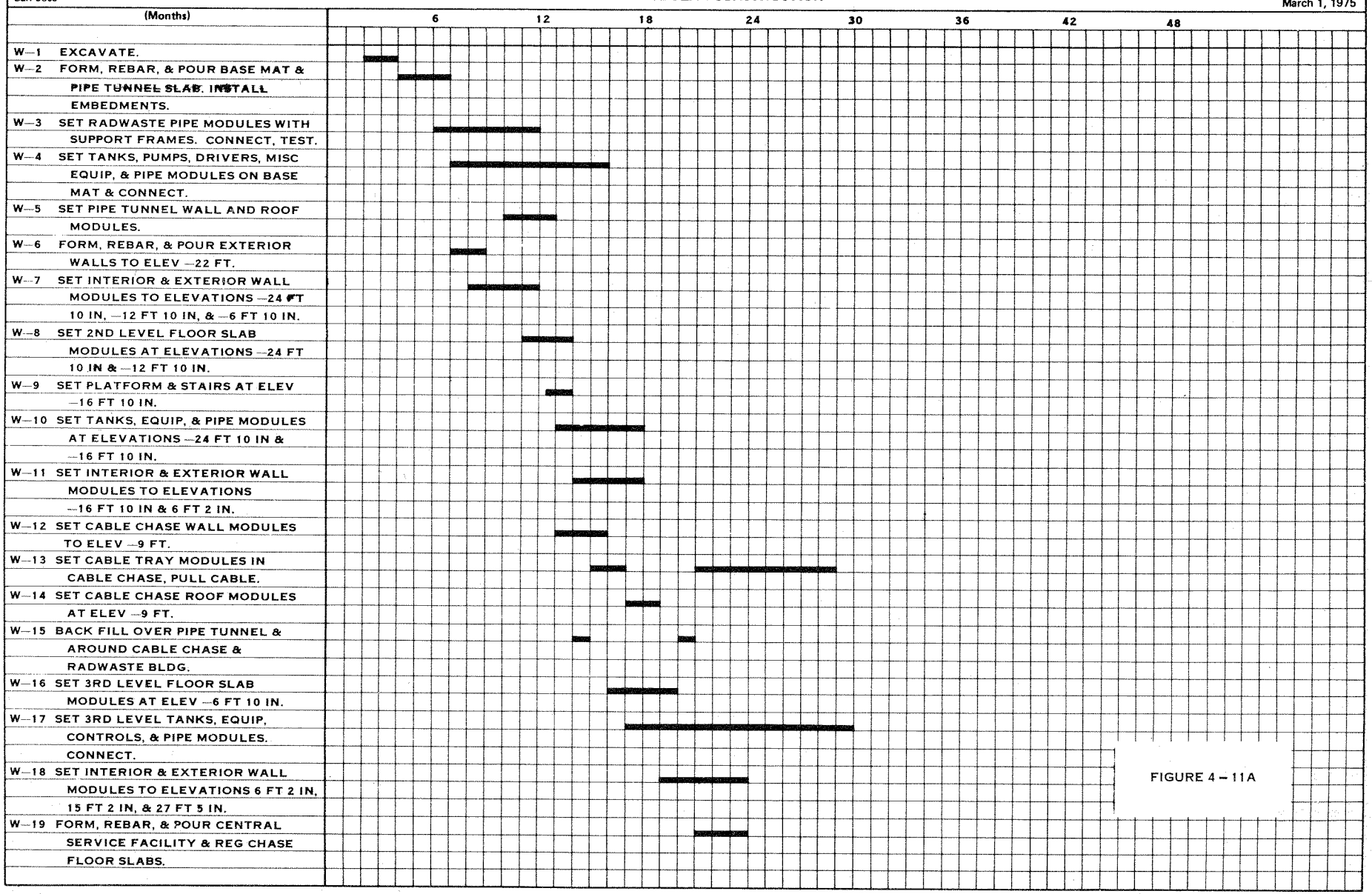

FIGURE 4 – 11A

C F BRAUN & CO

General Electric Company

San Jose

RADWASTE BUILDING SCHEDULE

MODULAR CONSTRUCTION

Project 5003—P

March 1, 1975

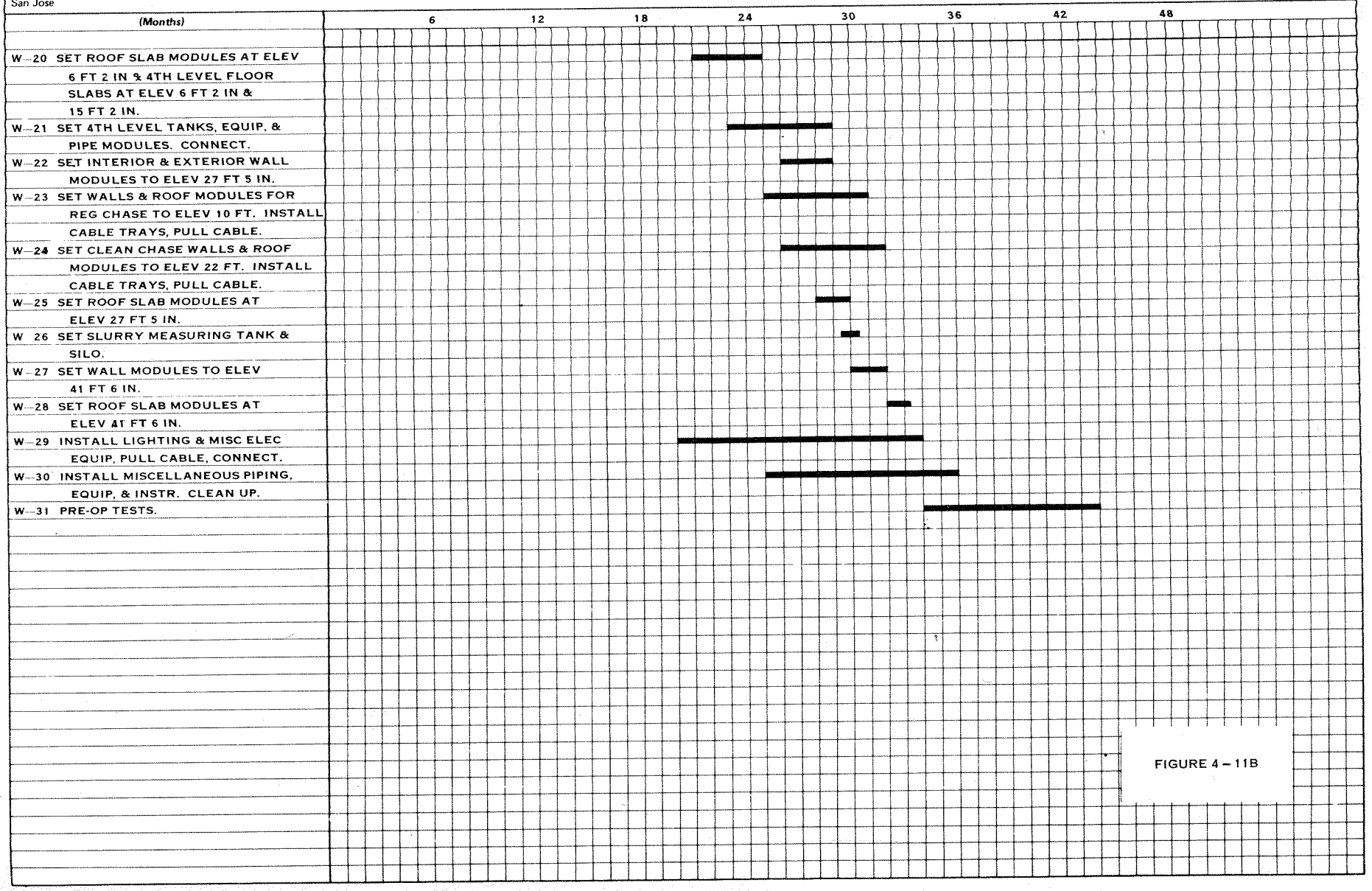

FIGURE 4 – 11B

C F BRAUN & CO

General Electric Company

San Jose

CONTROL BUILDING SCHEDULE

MODULAR CONSTRUCTION

Project 5003–P

March 1, 1975

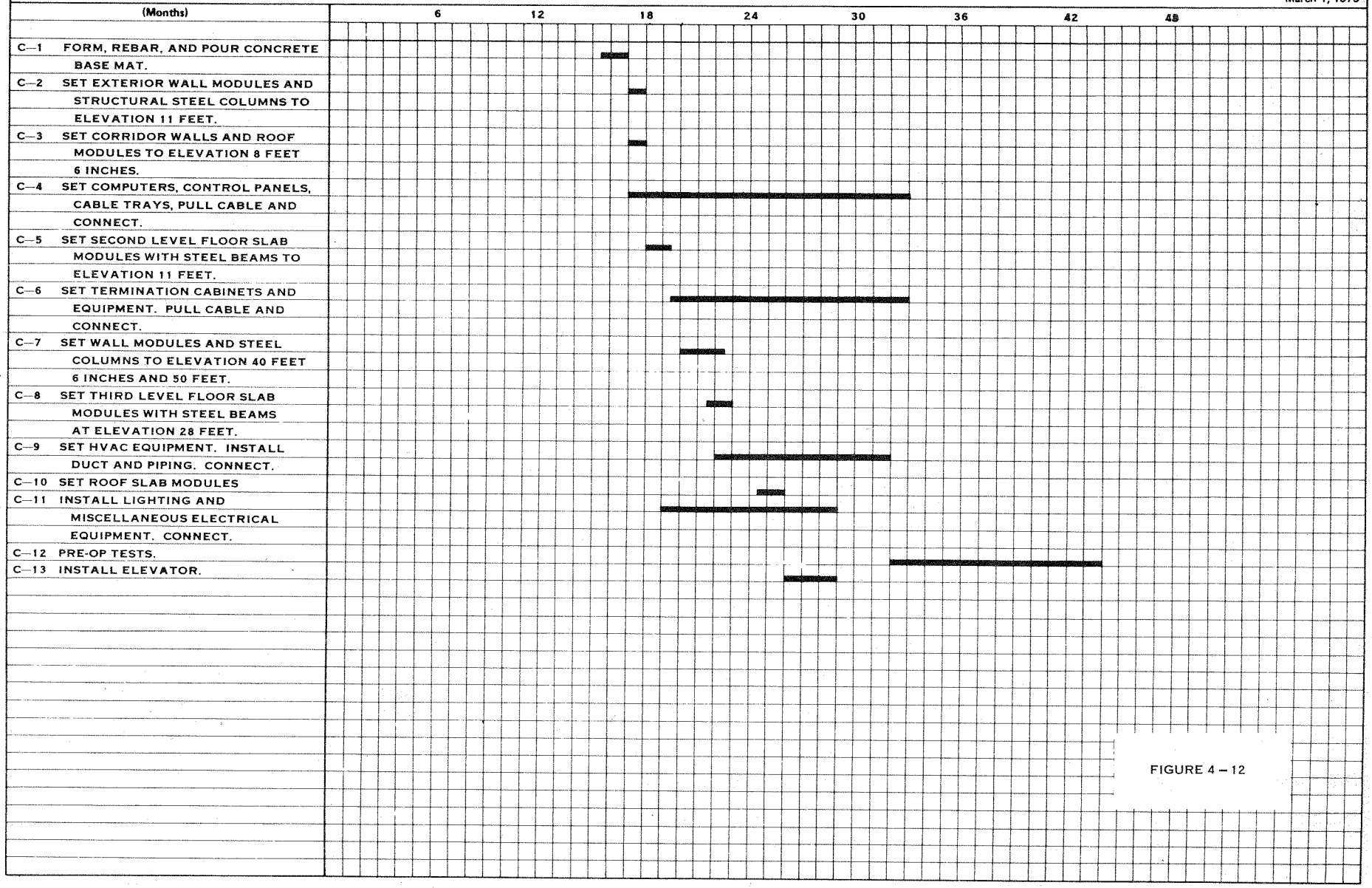

FIGURE 4 – 12

C F BRAUN & CO

General Electric Company

San Jose

TURBINE BUILDING SCHEDULE

MODULAR CONSTRUCTION

Project 5003—P

March 1, 1975

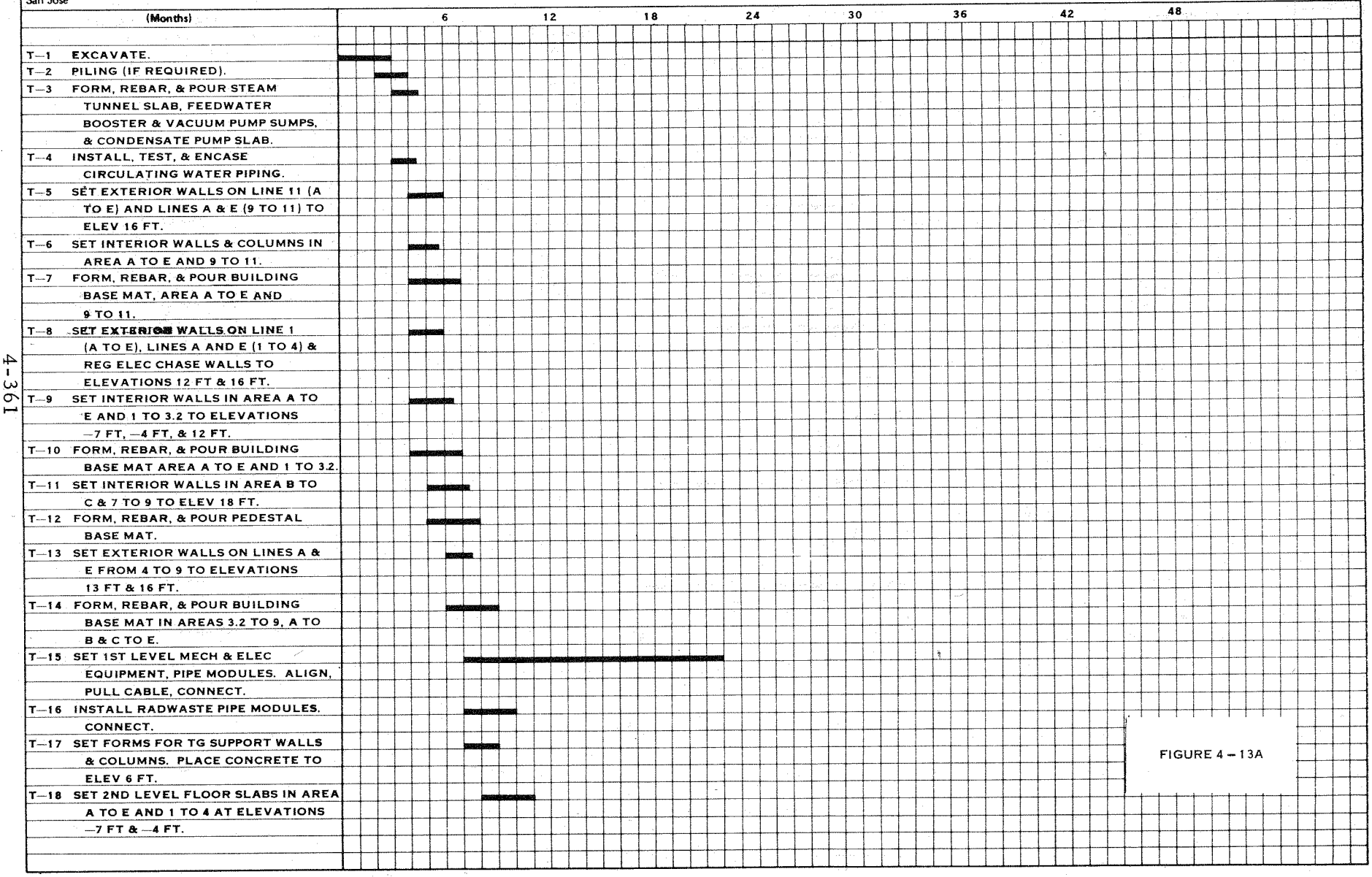

FIGURE 4 – 13A

C F BRAUN & CO

General Electric Company

San Jose

TURBINE BUILDING SCHEDULE

MODULAR CONSTRUCTION

Project 5003–P

March 1, 1975

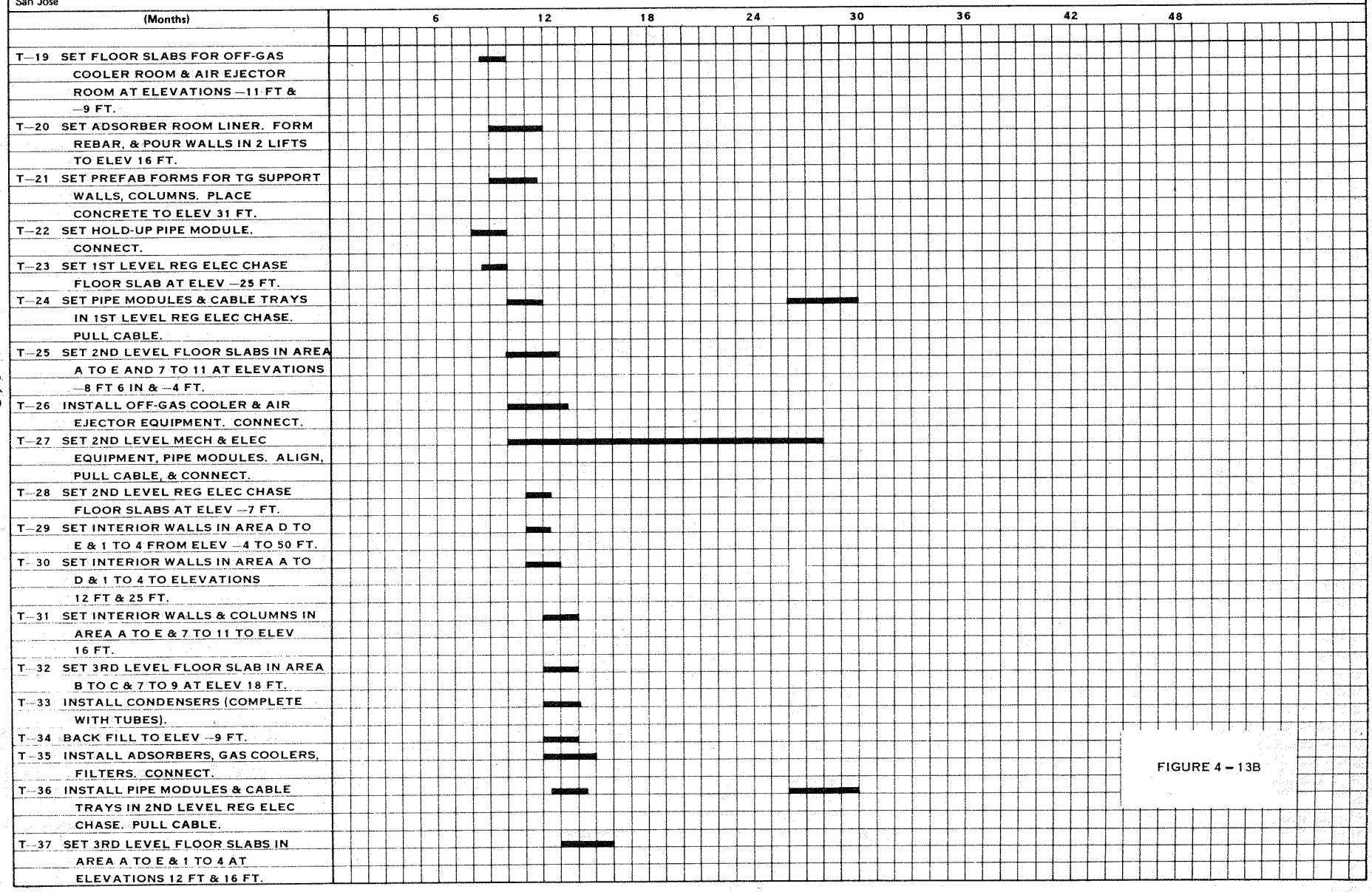

FIGURE 4 – 13B

C F BRAUN & CO

General Electric Company

San Jose

Project 5003—P

March 1, 1975

TURBINE BUILDING SCHEDULE
MODULAR CONSTRUCTION

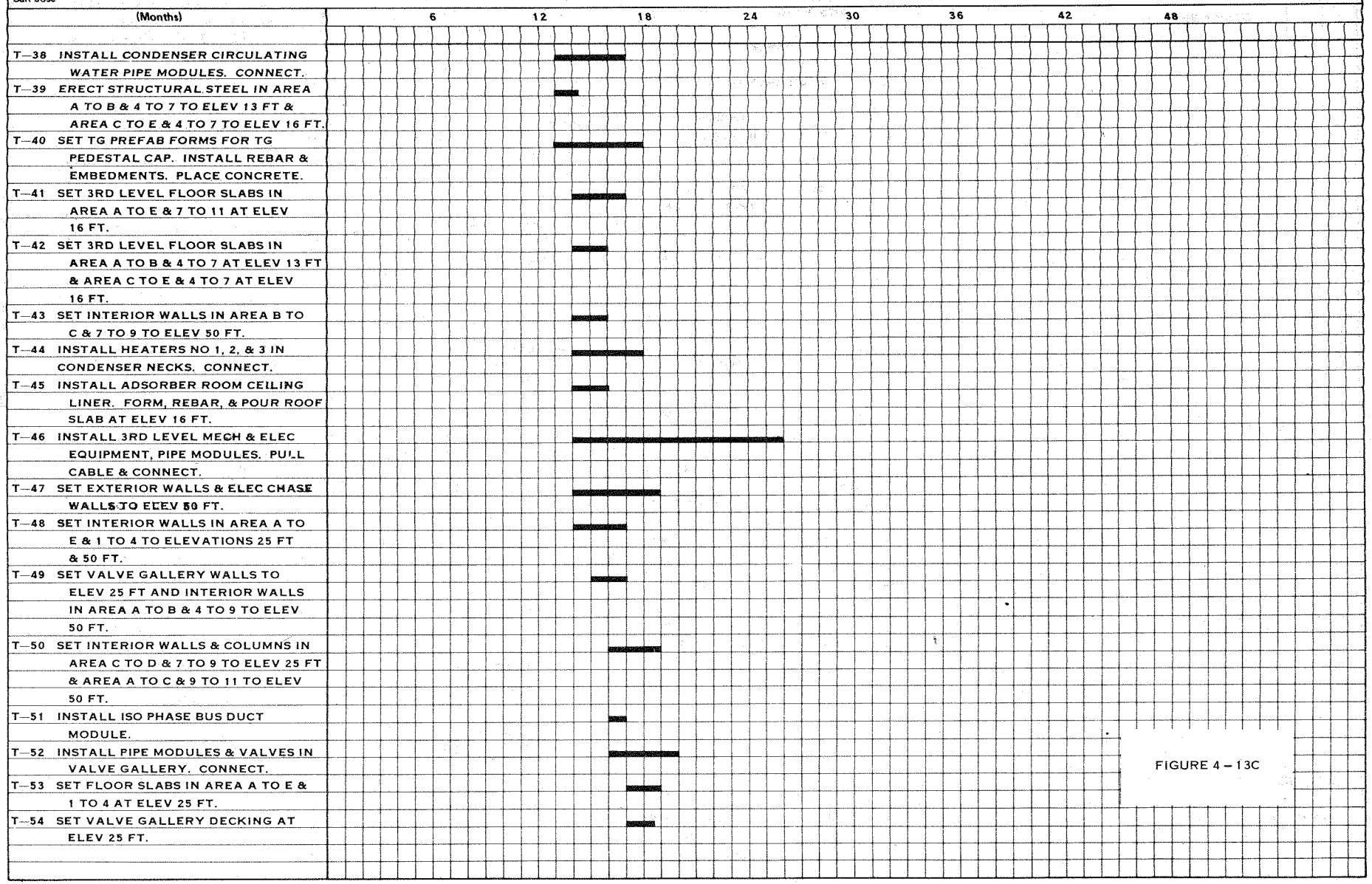

FIGURE 4 – 13C

C F BRAUN & CO

General Electric Company

San Jose

TURBINE BUILDING SCHEDULE

MODULAR CONSTRUCTION

Project 5003–P

March 1, 1975

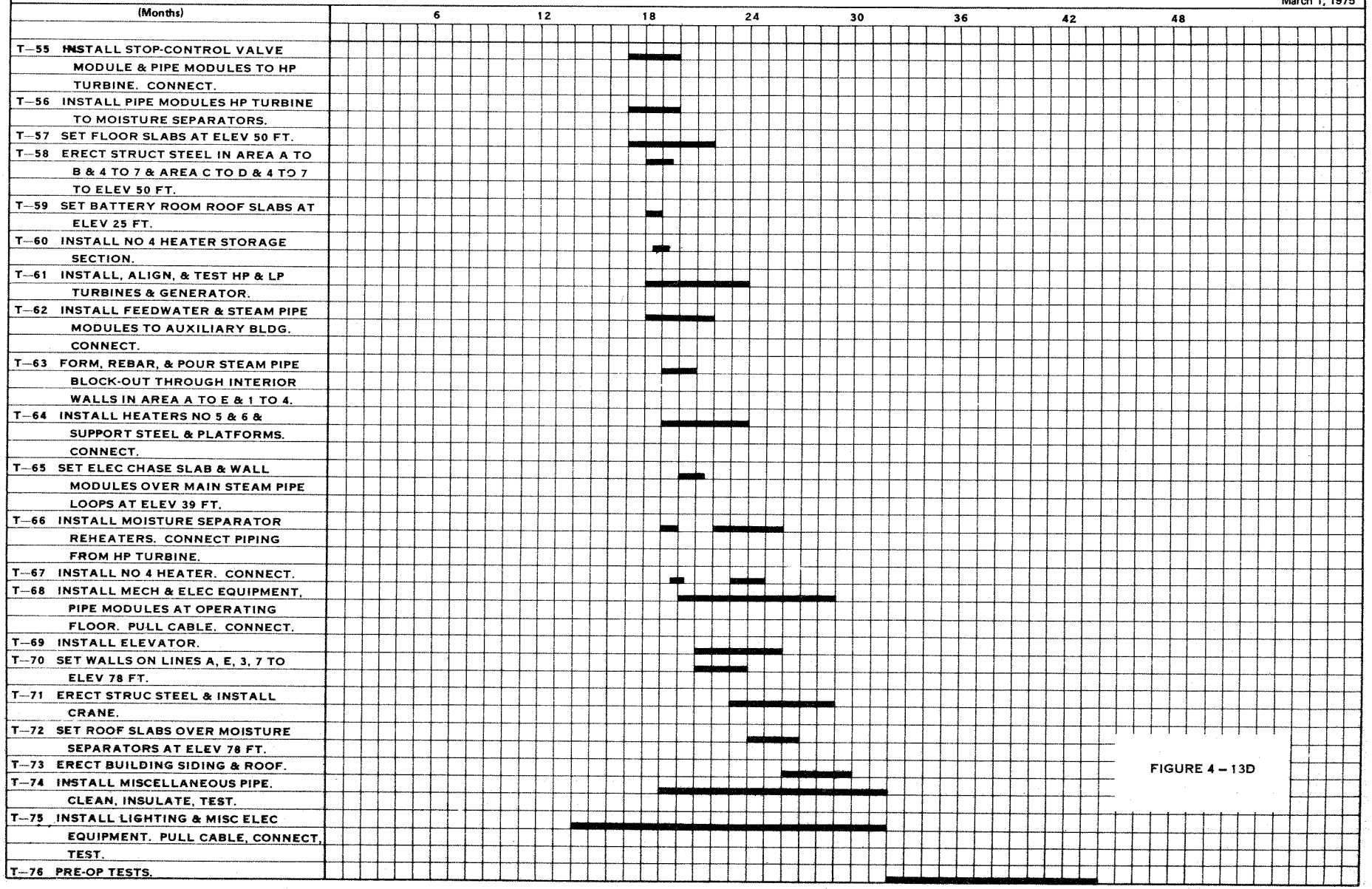

FIGURE 4 – 13D

APPENDIX 4.A-2

MODULAR CONSTRUCTION

USING

STEEL WATER MODULES

FOR

NUCLEAR POWER CENTERS

NUCLEAR SERVICES CORPORATION

TABLE OF CONTENTS

	PAGE
INTRODUCTION	4-367
SUMMARY	4-368
CONCLUSIONS	4-370
DISCUSSION	4-371
GENERAL CONSIDERATIONS	4-371
AUXILIARY BUILDING	4-375
REACTOR BUILDING	4-377
FUEL BUILDING	4-377
TURBINE BUILDING	4-378
SCHEDULE CONSIDERATIONS	4-378
APPENDICES	
TABLES	4-380
FIGURES	4-384
REFERENCES	4-399

SECTION 1

INTRODUCTION

The use of water for shielding against nuclear radiation has found application in various segments of the nuclear industry, but has not been used to any appreciable extent in nuclear power generating plants. The conceptual design of a reactor building utilizing this principal is the subject of United States Patent No. 3,752,738, and is described in that document. Nuclear Services Corporation, under contract to General Electric, performed a design study to evaluate the use of water shielding for a large nuclear generating plant built using modular construction at a large generating center comprised of multiple units (power park). This report describes the work performed in the cause of this study, results obtained, and conclusions reached as a result of the work.

Several assumptions have been made in proceeding with the study as follows:

- A 1,000 ton crane is available to move modules (a larger crane may be proposed if there is a benefit to using modules larger than 1,000 ton).
- The steel-water method of construction is primarily considered for use in large nuclear installations called "Nuclear Power Centers" which will include from four to twenty nuclear power plants on the same site.
- Shop construction (either at an offsite shop, an onsite shop, or combinations thereof) is to be maximized.
- The main thrust of this study is to provide ways and means to reduce the overall plant construction schedule.
- Shop fabricated modules are considered to be available at the construction site when required.
- Shop construction schedules are not a part of this study.
- Financial tradeoffs are centered mainly on schedule improvements with the exception of selected water-steel and concrete construction cost comparisons.

SECTION 2

SUMMARY

Based on the assumptions listed in the previous section, a survey has been made for potential steel-water substitutions in the following areas:

The Auxiliary Building

The Reactor Building

The Fuel Building

The Turbine Building

The auxiliary building was selected as the main line of effort because of the heavy radiation shield walls required, and the potential for maximizing shop fabrication of instrumentation, control panels, and selected piping systems. Based on the findings derived for the auxiliary building, the other buildings were reviewed for potential benefits.

Consideration was given to steel-water substitutions in the reactor building for both the reactor shield and the drywell. In order to accommodate the substitution, shield thicknesses increase by approximately a factor of two so that equivalent shield values are maintained. This increase in shield thickness requires a major redesign of the building. Such a redesign is beyond the scope of the current evaluation. Consequently, steel-water substitutions in the reactor building are limited to areas outside the drywell and inside the containment.

The use of steel-water substitutions is particularly advantageous for those structures primarily needed for radiation shielding. Other walls which are mainly used as missile shields have remained concrete for this report, but steel outer walls are possible alternates.

The main advantage of steel-water construction is that the size of module which can be transported by a crane of any given capacity is greatly increased over a corresponding concrete structure. This is true primarily (for walls used as radiation shields) because the main shielding (water) is added at the site, and does not have to be transported by the crane.

When the modules are larger, more equipment can be installed, wired, and tested in the shop prior to the transfer to the site. This shop fabrication is a significant factor in schedule improvement because the site and shop operations can be carried on in parallel. Also, if there are fewer pieces (modules) to put together in the field, less time will be required to make the assembly at the site. This is true because more of the interconnections will already have been made and checked out in the factory.

The fabrication of large steel modular structures is already in progress for building large ships and bridge sections. Consequently, this technology can readily be adopted for nuclear plants.

CONCLUSIONS

A comparison between the concrete modular construction scheme, proposed in References 1 and 2, and the steel-water construction scheme, proposed in Reference 3, when applied to the Auxiliary Building, reveals the following:

- A substantial savings is indicated in the overall site construction schedule (approximately 11 months) when compared with the concrete modular construction.
- The tradeoff between material and labor costs indicated that steel-water construction costs more than concrete construction. Although appreciable, the differential is not a large percentage of total plant construction costs, and could be more than offset in situations where construction span time has an impact on overall costs.
- The steel-water potential evaluated in this report is sufficiently attractive to warrant further investigation of detailed construction methods and a review of questions which are outside the scope of this study (See Section 4.1).
- Larger modules (fewer total pieces) are possible with steel-water construction.
- The modules contain more equipment, thereby shifting construction from the site to the shop.
- Higher quality control is possible with shop construction methods.
- The shop and site personnel staffs are not subject to the turnover experienced with normal plant-by-plant construction methods.

A review of other buildings (reactor, fuel, and turbine) indicates that similar schedule savings are available for these buildings also.

DISCUSSIONS

General Considerations

The use of modular construction for nuclear power plants is developed in References 1 and 2 (as listed in Appendix 5.3). Also, an inside-out method of construction is proposed. The main benefit from modular construction is the overall plant construction schedule improvement derived from combinations of shop fabrication and site construction. In effect, the nuclear power plant construction process is envisioned as a large scale development of assembly plant techniques where various parts and sub-assemblies are made by numerous manufacturers all over the country (or world), and are brought together for assembly in one place. The schedule benefit comes mainly from parallel rather than series construction operations.

A further refinement of the modular construction idea is developed in Reference 3. Succinctly stated, steel and water construction is substituted for concrete and steel construction. The water is considered to provide multiple functions: shielding, thermal energy absorption, and a standby source of cooling water. The compartmented steel containers are considered to provide missile barriers for containments and a method of retaining sufficient water to immerse reactor fuel following a loss-of-coolant accident.

From the standpoint of modular construction, the advantage of steel-water modules is that the empty steel tanks weigh considerably less than pre-cast concrete. The steel provides the necessary structural requirements and the water is added at the site to provide the necessary shielding requirements. In this way, larger modules and more installed equipment per module can be provided for the same weight of module when compared with precast concrete. Consequently, the steel-water substitution results in a net increase in shop fabrication and reduction in site erection time.

Figure 11 shows a typical construction for the ceiling or floor of a steel-water module. For the same radiation shielding value, the steel-water floors will have a little less than twice the thickness of concrete. Since hot rolled carbon steel plate is less expensive than special hot rolled structural shapes, maximum use of plate is expected. In order

to facilitate the use of automatic welding equipment in the shop, external welds are the best choice. One way of minimizing the number of weld preparations is shown in Figure 10. The floor (or ceiling) is compartmented to reduce the potential for serious shielding loss. The structure itself has a large section modulus for support of the weight of shielding water and various live loads.

Figure 10 shows a typical vertical wall section. Individual wall tanks will need to be divided into sections of a maximum of about 20 feet high in order to limit water pressures on the tank sides and bottom.

For shielding walls using steel and water, the cost differential (neglecting the cost of water) will run higher for steel by a factor of two, using one inch steel plate and a 2.5 foot thick concrete wall (five foot thick water-steel) for comparison. On the other hand, if one-half inch steel plate is used and compared with a four foot thick concrete wall (eight foot thick water-steel), the water-steel wall is less expensive. In essence, the comparison is sensitive to the amount of steel required. One inch or one-half inch plate has been used for this study. An optimum balance of structural steel, plate, stiffeners, and compartmentation may reduce steel costs below those summarized in this report. Neglecting the cost of additional space requirements, the steel-water shield cost approaches the cost of concrete as the shield thickness increases because the amount of steel decreases relative to the amount of water.

Considerations which need further investigation for steel-water construction are as follows:

- Corrosion inhibitors for the steel tanks
- Organic inhibitors for the shield water
- The amount of hydrogen generated as the result of gamma dissociation of the shield water
- Seismic analysis of the structure (evaluation of resonant frequencies)
- Transmission of noise and vibrations from rotating machinery.
- Possible needs for additional insulation of certain walls due to the thermal conductivity of the water-steel tanks
- Possible need for freeze protection for the water-steel tanks
- Physical size limitations for water-steel modules

The shield water tanks are fabricated into many compartments so that the leakage of one compartment does not remove more than a small segment of shielding. Appropriate level measuring devices will be installed in the tanks to determine leaks or potential problems. The observation is made that loss of shielding in the reactor building (reactor shield or drywell wall) is a more difficult problem than most of the shielding throughout the rest of the plant. More specifically, much of the shielding throughout the plant is provided to accommodate N-16 which goes away immediately after plant shutdown. Consequently, shielding repairs can readily be made if required. Reactor shields are required after plant shutdown, and consequently must be compartmented more carefully to accommodate loss of water if such a loss occurs.

The thought has been expressed by General Electric that the use of steel-water construction may be beneficial from the seismic standpoint. This stems from the fact that steel-water or various combinations of concrete and steel-water construction provide a means of tuning the total structure to a higher or lower frequency (as required), thereby removing whatever difficult resonances exist.

There are several options available with steel-water construction which allow frequency tuning:

- The water shielding tank can be filled so that it becomes a solid mass.
- The tank can be filled, not quite to the top, so that advantage can be taken of wave action in such a way a as to cause a mass shift counter to the seismic force input.
- The system frequency can be changed by the way the tanks are compartmented.
- Advantage can be taken of the damping action afforded by the water.
- The section modulus of the tank structure can be adjusted as needed to change the natural frequency.
- Various combinations of steel-water tanks and concrete may be used for tuning because of the different modulus of elasticities of steel and concrete. The natural frequency is a function of flexural stiffness (EI), which is combination of the material modulus of elasticity and the structural moment of inertia.

The gain to be derived from the above considerations may be appreciable. However, the generation of sufficient

data for evaluation is outside the scope of this study. The recommendation is made that an analytical seismic model of a steel-water and a steel-water-concrete structure be developed to compare with a concrete structure. The models can be used to evaluate the advantage of tuning structures to remove them from the high amplitude frequencies of seismic input.

Several advantages of forming steel-water modules are listed and discussed below:

- Effective utilization of manpower
- Reduced on-site plant construction operations
- Reduced number of modules for installation
- Higher level of quality control for shop fabrication

EFFECTIVE UTILIZATION OF MANPOWER. Shop fabrication using repeat modules provides a way of long-range shop planning which will allow more effective utilization of manpower without periods of high and low manpower demand with attendant personnel turnover. One result is the chance to keep well trained personnel on hand in order to carry out the fabrication program effectively, and improve the quality of the product in keeping with the ever increasing quality requirements.

The same factors can be applied to the personnel staff at the site. With several plants in various stages of construction, there is again a chance for long-range planning which can smooth out manpower requirements and improve manpower quality.

The use of shop personnel at the site, and vice versa, is a possibility which improves flexibility. The problem here is the labor relations situation. However, the whole nuclear power center idea and modular construction require a solution to labor relation problems.

REDUCED ON-SITE CONSTRUCTION AND ERECTION TIME. The primary purpose of constructing steel-water modules is to reduce the number of series operations at the site, and to parallel shop fabricarion with site construction in such a way as to maximize shop fabrication. For a given maximum module weight, steel-water modules permit installation of more equipment within the modules prior to site erection. Site activity for modules includes placing modules, making structural tries, and making interconnections of piping,

electrical cables, and ductwork. In this way, maximum advantage can be taken of shop fabrication with attendant benefits of improved machinery and fabrication techniques, plus the schedule benefits of parallel rather than series operations.

REDUCED NUMBER OF MODULES FOR INSTALLATION. Another advantage of constructing steel-water modules is to reduce the total number of individual modules to be transported from the shop to the plant site. This means a fewer number of trips to be made by the 1,000 ton crane and a major reduction in the number of interfaces and connections to be made at the site.

HIGHER LEVEL OF QUALITY CONTROL FOR SHOP FABRICATION. The availability of large machinery and automatic welding equipment in shops is a factor which has a large potential for improving quality control. Automatic welding equipment provides a means of rapidly providing accurate welds without the same level of skill required of craft labor at the site and the human limitations of hand welding. In view of the ever increasing level of quality control being imposed on nuclear power plants, any method of providing improved quality with a potential for cost savings is desirable.

Auxiliary Building

Reference is made to Figures 1 through 8 and Table 5.1.1, which define the construction sequence as now envisioned. The sequence involves a combination of concrete and steel-water construction as described in Section 4.1. First the floor mat is poured, and then the concrete retaining walls are poured up to grade. This operation is estimated to take about nine months according to Figure 8 and 9.

The placement of pumps (RHR, RCIC, HPCI, and LPCS) on the base mat, or in caissons in the base mat, does not need to enter into the "critical path." In actuality, each of these pumps must be capable of servicing or replacement. Normal maintenance will require capability to remove the drive motor, the pump impeller, and internals, and possibly the pump casing itself. Consequently, if maintenance capability is provided in the design, the pumps can be placed at any point in the construction cycle independent of the progress of construction after placing the floor mat. The pump casing can be installed in the piping system when required, and the pump internals and drive motor can follow at any time in the schedule prior to pre-operational testing.

The remainder of the sequence shown in Figures 1-8 and Table 5.1.1 is set to maximize the size of each module and the amount of equipment installed by the shop.

Figure 1 shows the floor mat and retaining walls in place, and indicates the placing of pumps in a similar fashion to Reference 1 and 2. Actually, this step is not necessary at this time, as noted above. Installation of safety system piping and equipment can be accomplished at this point in the schedule, or can possibly be accomplished in the shop by supporting equipment from the walls and ceilings within the modules which come later.

Figure 2 shows the placing of the RCIC and RHR room module (AB-1) which forms a lower structure.

Figure 3 shows the placing of cable tray and service piping module.

Figure 4 shows the placing of the steam tunnel and piping module (AB-3). This is a large, complex module which requires thick shielding walls. Numerous field welds are saved by shop fabrication of the module, but the remaining field interconnections are difficult. Pipe supports will need to be adjustable in order to match the steam system, feed system, safety system, and auxiliary system piping which pass through the tunnel from the reactor building.

Figure 5 shows the installation of the RHR heat exchanger modules. This operation could come later, however, because of the design provision for later maintenance of the heat exchangers through access hatches in the roof.

Figure 6 shows the placement of the two largest modules (AB-5a and 5b). Half-inch plate and structural shapes have been used as much as possible to save on the weight of the module. A module of this size will need careful design, and may run into a limit on physical size which is as yet undefined. The outer edges of the module are open and supported by structural steel. These outer structures will be tied to the outer walls when the latter are placed. The third floor electrical equipment and the fourth floor HVAC equipment can be installed in the shop. The roof is left off for weight savings, and will be added later.

Figure 7 shows the placement of the outer walls which can be either concrete or steel, as noted in Section 4.1, and illustrated in Figures 12 and 13. Steel modules reduce the number of modules from five to two or three.

Finally, the roof is added to cover modules AB-5a and 5b.

Table 5.1.2 provides a comparison between the modules of Reference 1 and 2, and the steel water modules of this study.

Table 5.1.3 provides a rough cost comparison between steel-water construction and concrete construction, using $150 per ton for concrete and $1,000 per ton for steel. The schedule benefit is neglected.

Reactor Building

Consideration was given to steel water construction in the reactor building in the same manner as outlined in Reference 3. The first observation is that the reactor building would need redesign if water-steel shielding is used because of the increase in shielding thickness required. The conclusion was drawn that a building redesign with appropriate adjustments for the pipe break transient analysis is required. Such redesign is outside the scope of this study.

On the other hand, those areas in the building which are outside the drywell and inside the containment can be modularized and adapted for steel water construction without disturbing the reactor building containment design balance. The dryer-separator pool and the fuel storage pool can be converted to steel modular construction which allows later placement of equipment at lower levels.

Steel-water design similar to that described in Reference 3 remains a viable possibility for evaluation at a later date.

Fuel Building

The fuel building is amenable to the substitution of steel-water modules in a manner similar to the auxiliary building. The east end of the building can be modularized with steel and water to include the Fuel Pool Cooling and Cleanup System (FPCCU). The central and west end of the building can be modularized to include the various pools. Pool construction and maintenance can be facilitated by shop construction because of improved welding and the chance to provide for easier weld inspection. A stainless steel liner will still be required. The liner can be erected and tested within a fixture, and then transferred to a carbon steel structure which will support the liner for transportation and after the pool is in place. Appropriate spaces can be designed for purposes of leak detection. Shielding outside the pools can be accomplished by additional water-steel tanks or poured concrete using the steel as a form to be left in place. The option of building outside walls made of steel or concrete is the same as that which exists for the Auxiliary Building. The floor mat and the retaining walls up-to-grade remain concrete, as in the case of the Auxiliary Building.

Turbine Building

From the standpoint of structural support of the turbine, concrete remains the best pedestal material because of its absorption characteristics. On the other hand, there are numerous shielding walls in the turbine building which may provide a potential construction improvement with steel-water construction substitutions. Reference 5 indicates shielding requirements for the following:

- Turbine
- Condensers
- Condensate System
- Feed System
- Offgas System
- Condensate Demineralizer System

Essentially, this accounts for almost all of the non-electrical equipment in the building. Potential benefits for modular construction using steel and water are available for all these areas. Some of the shielding is primarily for N-16, while other shielding (offgas and condensate demineralizer) is primarily for the accumulation of fission products. From the maintainability standpoint, some differentiation may be required depending on the source of radiation. In particular, shield maintenance for N-16 areas is not as severe as the fission product areas because N-16 radiation can be reduced by a lower power level or removed by plant shutdown. Various modules containing feed heaters or reheaters, and pumps or off-gas system equipment of condensate demineralizer system equipment can be shop fabricated in steel-water modules combining shield walls and equipment to a module weight limit. The combination of the modular construction scheme devised for the Turbine-Generator island in Reference 1 (concrete) coupled with auxiliary equipment construction using steel-water modules is attractive with considerable time gains in the overall construction sequence.

Schedule Considerations

Reference is to Figures 8 and 9 which show the following:

Figure 8 - Auxiliary Building Schedule Using Steel-Water Modules

Figure 9 - Auxiliary Building Schedule Using Concrete Modules

Figure 8 indicates a 24-month site construction schedule with a nine-month preoperation test schedule (total 33 months). Figure 9 indicates a 32-month construction schedule with a 12-month preoperational test schedule (total 44 months). The basis for time reductions between Figure 9 and Figure 8 is primarily the following:

- Much of the equipment installation indicated in the Figure 9 (AB-13, 23, and 24) is considered to be completed in the shop.
- There are fewer modules to install.
- The equipment brought to the site in modules is considered to have been tested and checked out in the shop before shipping to the site.
- There are fewer series operations at the site because equipment installation is not dependent to the same degree on how far site construction has progressed. More specifically, site construction and shop construction are going on in parallel, and are not fully dependent on each other.

The assumption is made that the modules are available at the site when required. For the first plant, this may require a module construction start before site construction start. However, the plants which follow should be on a schedule where the modules are at the site when required.

TABLE 5.1.1

AUXILIARY BUILDING

CONSTRUCTION SEQUENCE

Step	Module	Tons	Description
1	AB-1	930	RCIC pump room, and lower section of RHR rooms
2	AB-2	260	Service piping and cable trays
3	AB-3	835	Steam tunnel and piping and other piping
4	AB-4a	200	RHR exchangers, piping, and support frame assembly
5	AB-4b	200	RHR exchanger, piping, and support frame assembly
6	AB-5a	800	Battery room, cable chase, electrical equipment room and equipment, HVAC rooms and equipment, and roof
7	AB-5b	800	CRD maintenance room and benches, electrical equipment room and equipment, HVAC rooms and equipment, and roof
8	AB-6a	810	Auxiliary building outer concrete wall
9	AB-6b	810	Auxiliary building outer concrete wall
10	AB-6c	810	Auxiliary building outer concrete wall
11	AB-6d	810	Auxiliary building outer concrete wall
12	AB-6e	810	Auxiliary building outer concrete wall

TABLE 5.1.2

AUXILIARY BUILDING MODULE WEIGHTS†

CONCRETE VS STEEL MODULES

GE Module	Tons		NSC Module	Weight of Steel (Tons)	Weight of Water Added at the Site (Tons)
A1	690				
A2a	421				
A2b	421	2652	AB-1	930	2175
A3a	560				
A3b	560				
A6	75	975	AB-2	260	600
A7	900				
A11	710				
A15a	380				
A15b	380	2300	AB-3	835	2650
A25	90				
A27	740				
A16a	200		AB-4a	200	-
A16b	200		AB-4b	200	-
A8a	150				
A9a	200				
A10a	130				
A12a	70				
A13a	210				
A14a	130				
A17a	130	3725*	AB-5a**	800	750
A18a	40				
A19a	790				
A20a	220				
A21a	115				
A22a	320				
A23a	770				
A24a	450				

Table 5.1.2, Cont'd.

GE Module	Tons		NSC Module	Weight of Steel (Tons)	Weight of Water Added at the Site (Tons)
A8b	150				
A9b	200				
A10b	130				
A12b	70				
A13b	210				
A14b	130				
A17b	130	3725*	AB-5b**	800	750
A18b	40				
A19b	790				
A20b	220				
A21b	115				
A22b	320				
A23b	770				
A24b	450				
A4a	805				
A4b	805	Eliminated and substituted			
A5a	620				
A5b	620				
				24 in. Concrete	2 in. Steel
-	-		AB-6A***	810	250
-	-		AB-6b***	810	250
-	-		AB-6c***	810	250
-	-		AB-6d***	810	250
-	-		AB-6e***	810	250

† Module weights include equipment and piping weights shown in Figure -2 through Figure -6.

* The weights include concrete outer wall weights.

** Modules AB-5a and AB-5b exclude the outer walls. Outer walls are independent modules AB-6a to AB-6e.

*** The outer walls are assumed to be concrete.

TABLE 5.1.3

COST ESTIMATE

STEEL MODULES VS. CONCRETE MODULES

Steel Modules	Concrete Modules
1) Material & labor cost per ton: The range of erected steel costs is approximately $800 to $1,200 per ton based on the complexity of shapes and structures involved and the manpower required. $800 per ton is appropriate for shipyards while $1,200 per ton for small quantities is appropriate. $1,000 per ton has been selected for this study.	1) Material & labor cost per ton: $150/ton
2) Total steel cost (material + labor): 3056 tons x $\frac{\$1,000}{\text{ton}}$ = $3,056,000	2) Total concrete cost 16,000 tons x $\frac{\$150}{\text{ton}}$ = $2,400,000
3) Total outer wall concrete walls cost: 4050 tons x $\frac{\$150}{\text{ton}}$ = $607,500*	
4) TOTAL COST: Steel + concrete = $3,663,500	

* Based on 24" thick concrete walls. For 2" steel walls, the cost will be $1,140,000 @ $1,000/ton.

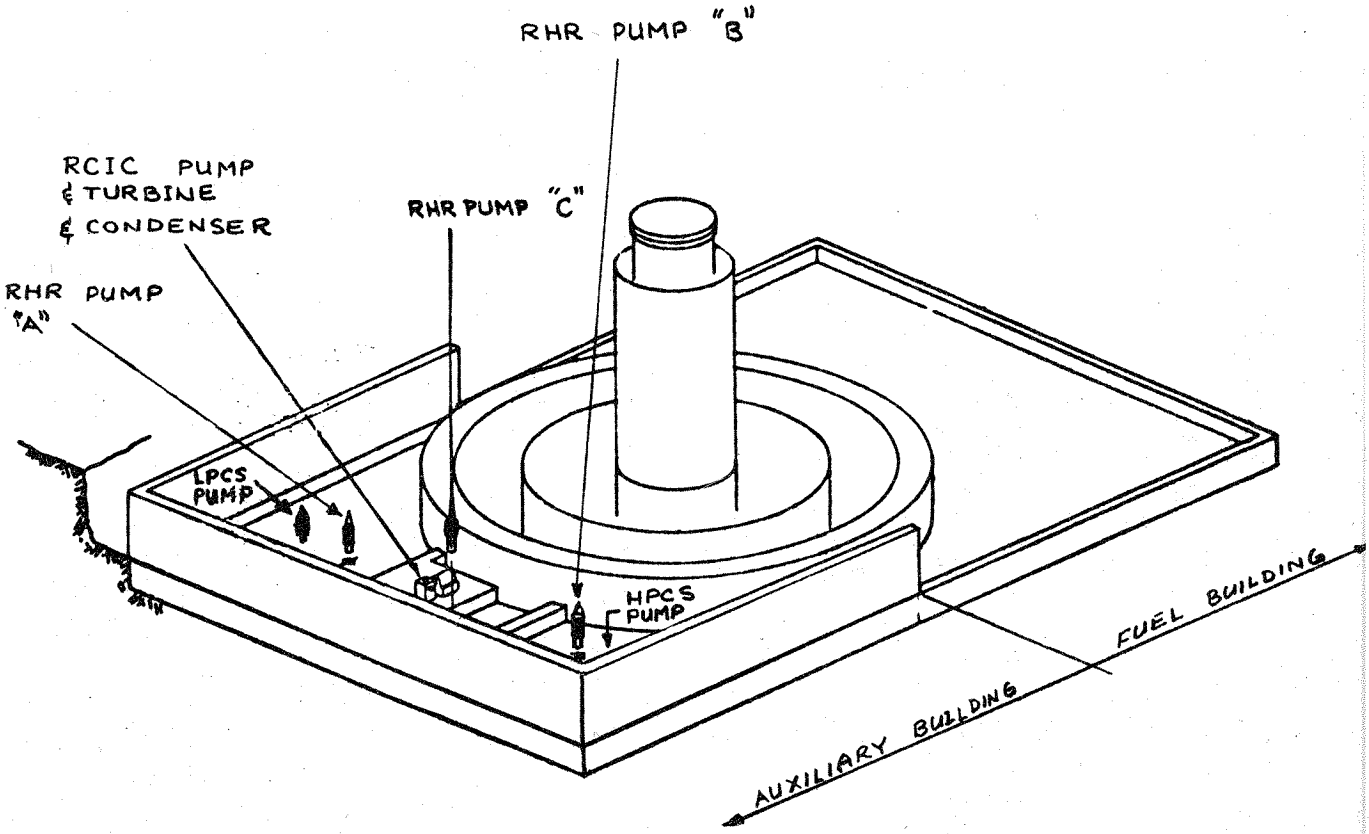

FIGURE 1 - Auxiliary Building Construction Sequence

STEP 1

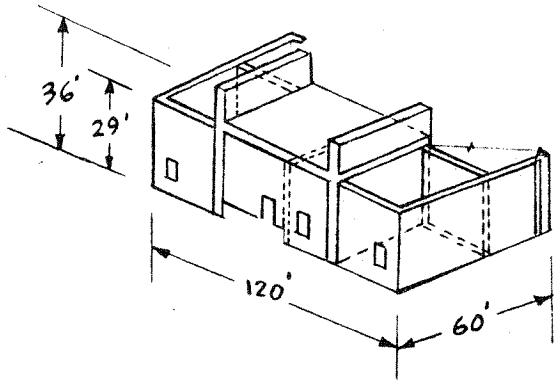

Structure	870 tons
Equipment & Piping	60 tons
Total	930 tons
Water added at the site	2175 tons

MODULE AB-1

RCIC Pump Room & Lower Portion of RHR Exchanger Rooms

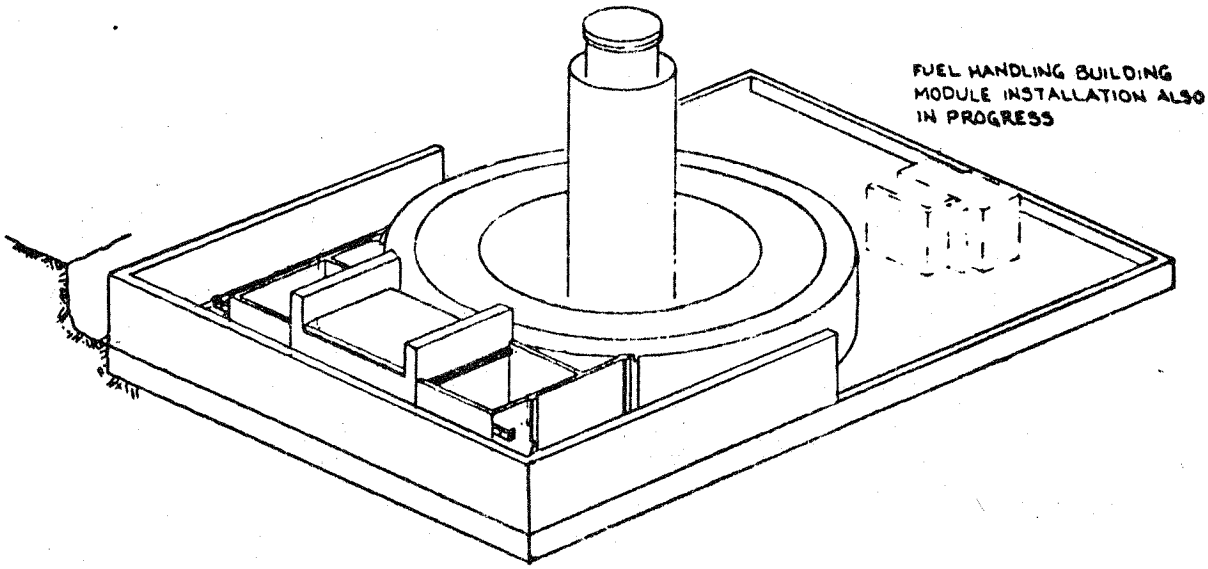

FIGURE 2 - Auxiliary Building Construction Sequence

STEP 2

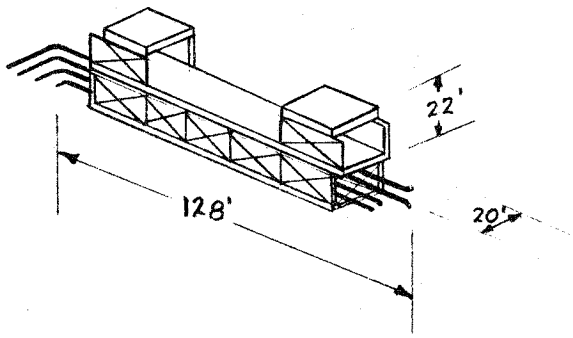

Structure	160 tons
Piping and Framing	100 tons
Total	260 tons
Water added at the site	600 tons

MODULE AB-2

Service Piping and Cable Trays

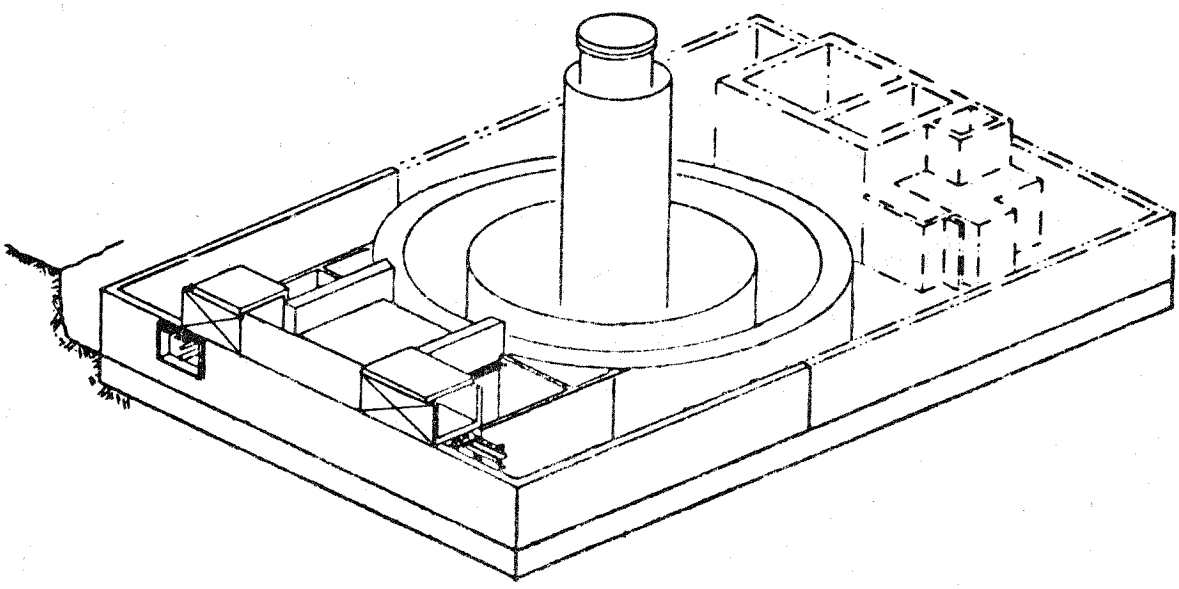

FIGURE 3 - Auxiliary Building Construction Sequence

STEP 3

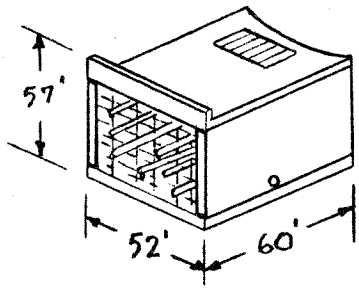

Structure	645	tons
MSL Piping & Framing	90	tons
Other piping	100	tons
Total	835	tons
Water added at the site	2650	tons

MODULE AB-3

Steam Tunnel and Piping

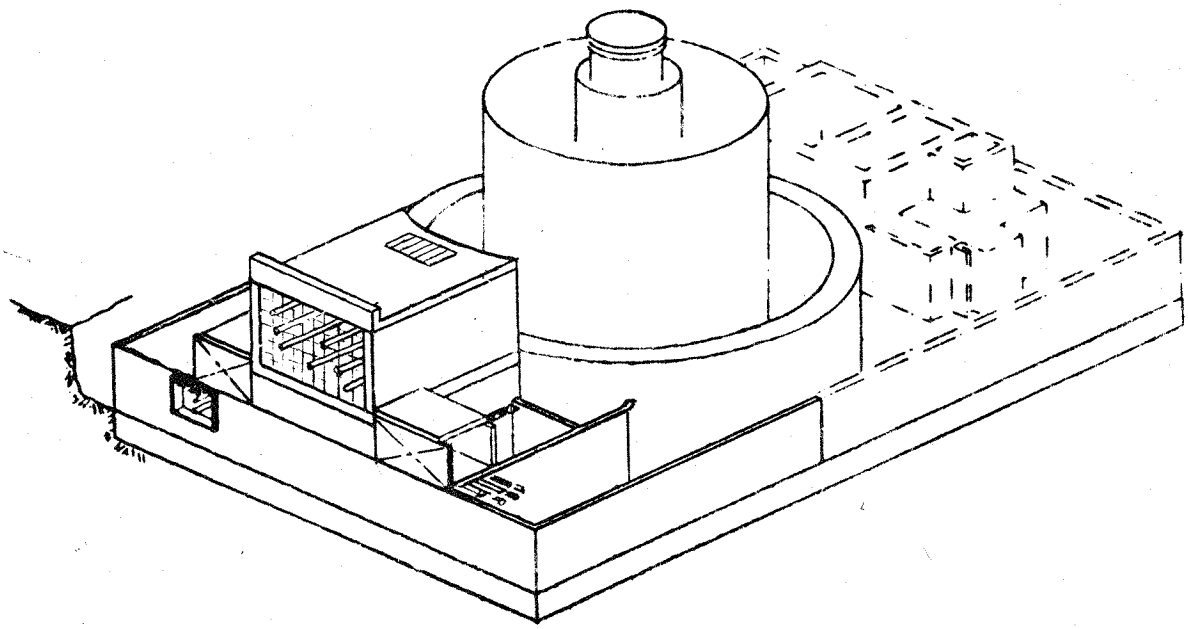

FIGURE 4 - Auxiliary Building Construction Sequence

STEP 4

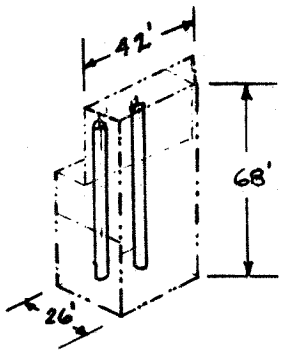

200 tons (each)

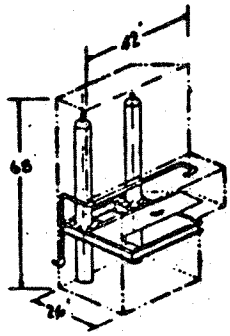

MODULE AB-4a

MODULE AB-4b

RHR Exchangers, Piping, and Support Frame Assembly

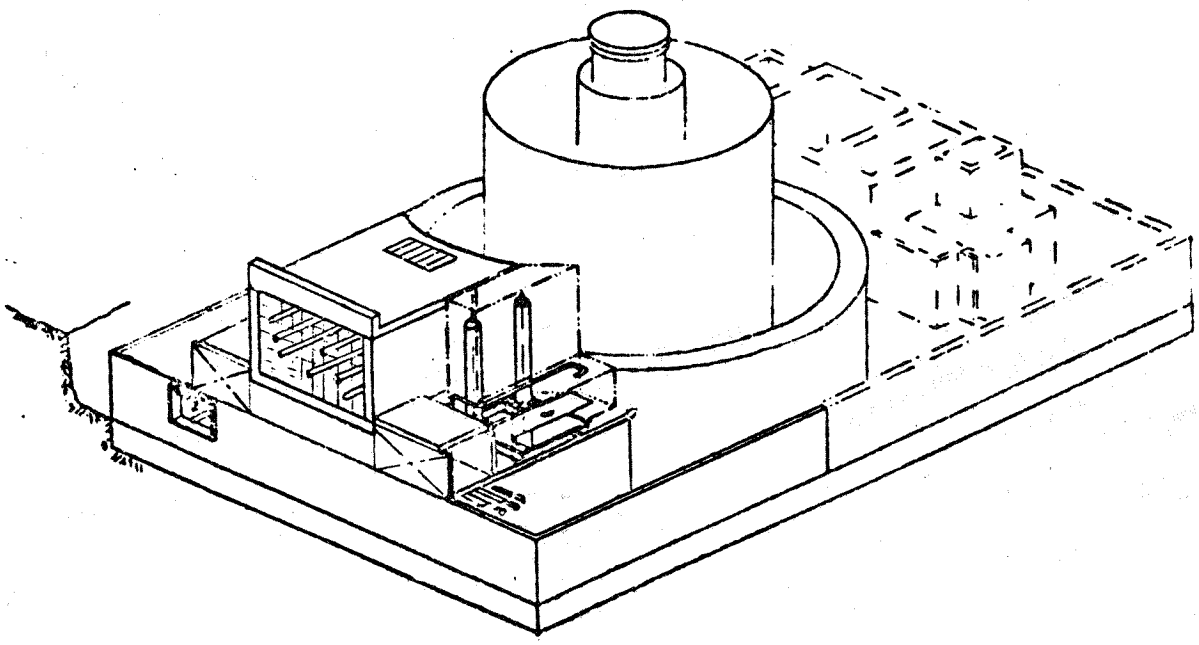

FIGURE 5 - Auxiliary Building Construction Sequence

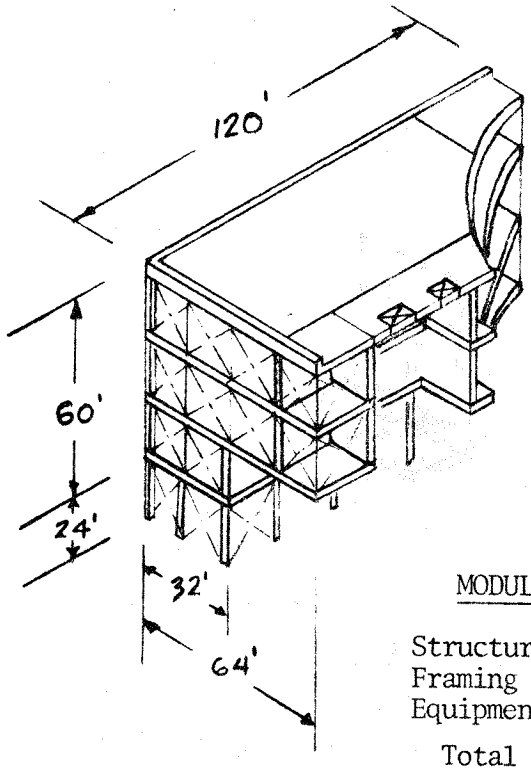

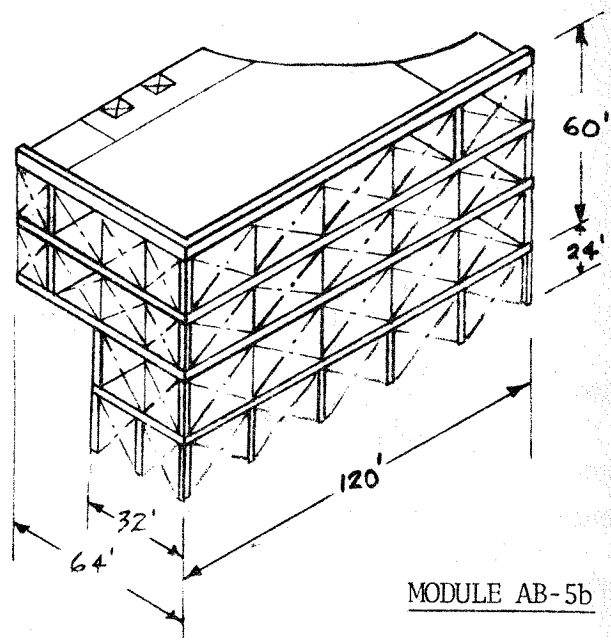

MODULE AB-5a

Structure	545 tons
Framing	145 tons
Equipment	110 tons
Total	800 tons
Water Added at the site	750 tons

MODULE AB-5b

Structure	545 tons
Framing	145 tons
Equipment	110 tons
Total	800 tons
Water added at the site	750

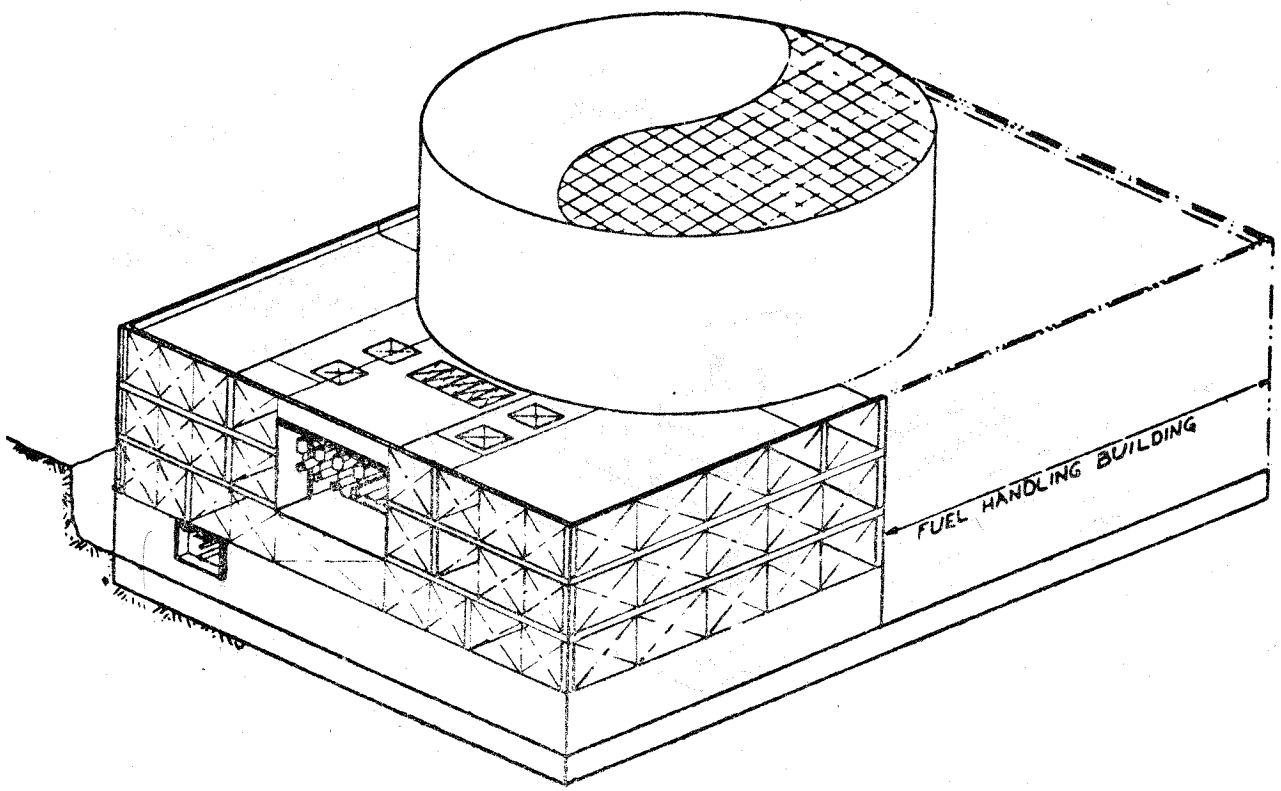

FIGURE 6 - Auxiliary Building Construction Sequence
STEPS 7 AND 8

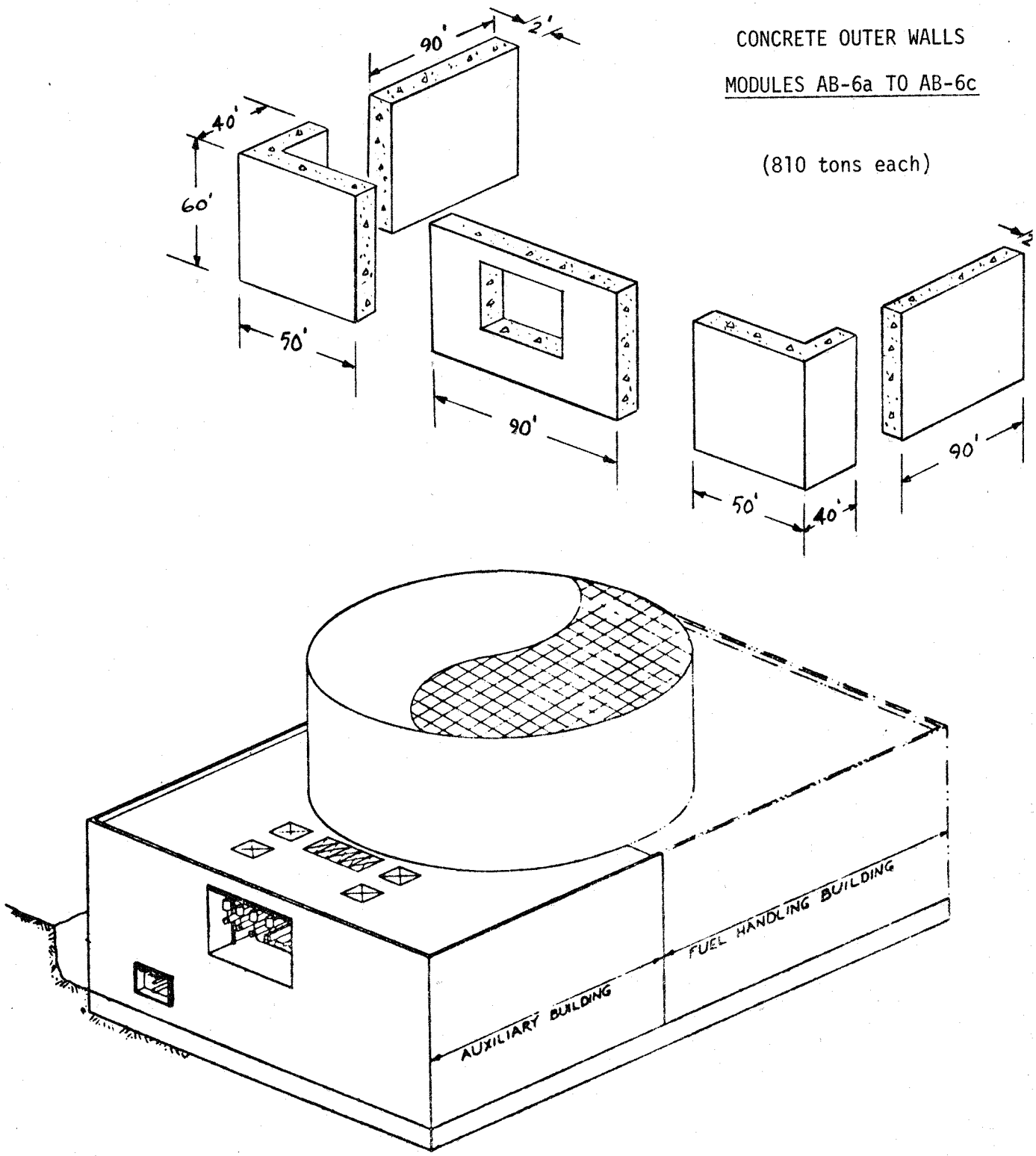

FIGURE 7 - Auxiliary Building Construction Sequence
STEPS 9, 10, 11, 12, AND 13

No.	Construction Operation	Duration in Months
1	Excavation	15
2	Construct pump caissons & install underground piping.	13
3	F.R.P. basemat & outer walls to grade	23
4	Install RCIC, HPCS & LPCS pumps, turbine, condenser, RHR pumps "A", "B", & "C", piping and platforms.	35
5	Install module AB-1 (RCIC pump room & lower portion of RHR exchanger rooms). Make module, piping, & cable connections.	16
6	Install module AB-2 (service piping & cable trays). Make piping connections and module welds.	20
7	Install module AB-3 (steam tunnel & piping). Make module welds & piping connections.	32
8	Install module AB-4a (RHR exchangers, piping & support assembly). Make module welds & piping & equipment connections.	8
9	Install module AB-4b (RHR exchangers, piping, & support assembly). Make module welds & piping & equipment connections.	8
10	Install module AB-5a (battery room, cable chase, electrical equipment room & equipment, HVAC equipment room & equipment and roof). Make module, piping, ductwork, & electrical connections.	24
11	Install module AB-5b (CRD maintenance room & benches, electrical equipment room & equipment, HVAC equipment room & equipment, and roof). Make module, piping, ductwork, & electrical connections.	24

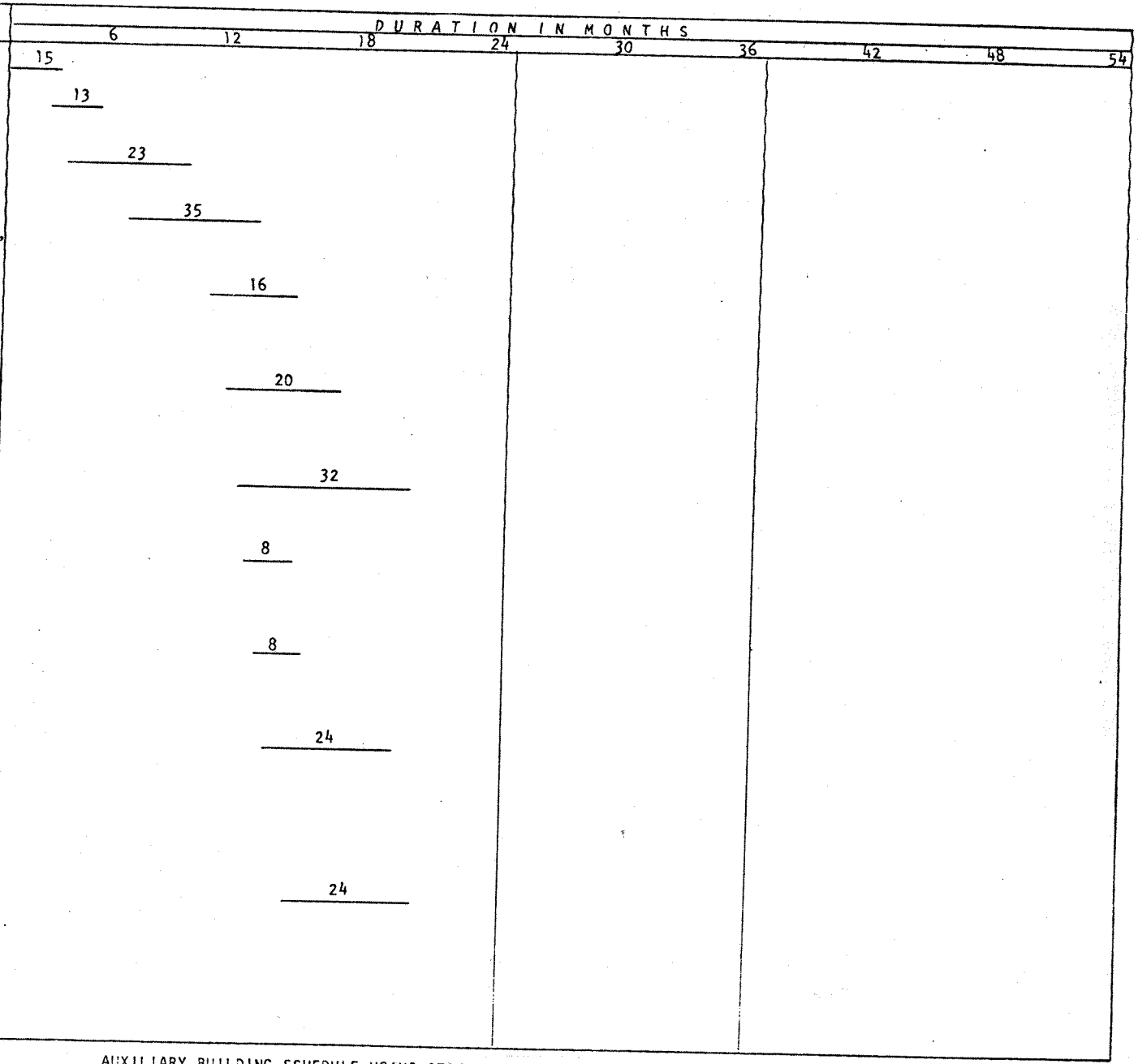

AUXILIARY BUILDING SCHEDULE USING STEEL-WATER MODULES

FIGURE 8

No.	Construction Operation	DURATION IN MONTHS (6, 12, 18, 24, 30, 36, 42, 48, 54)
12	Back fill to elev. (-) 9'-0" (grade level)	8
13	Install modules AB-6d to AB-6c (auxiliary building outer walls). Make wall joints & connections.	35
14	Pre-op test and water filling of shield walls.	40

AUXILIARY BUILDING SCHEDULE USING STEEL-WATER MODULES

FIGURE 2 (Continued)

5003
GE NUCLEAR PARK STUDY
Aux Bldg Schedule Modified

A-1	Excavation	13
A-2	Construct pump caissons & install ungd. pipe	13
A-3	Set Int & EIT wall modules to elev's (-) 7'10", 5'0" & 9'0"	15
A-4	FRP basemat & instl. embeds	21
A-5	Instl. 1st level pumps, equip., pipe modules, platforms & hookup	35
A-6	Set 2nd level fl. slab modules with struct. stl. beams @ elev. (-) 6'10"	21
A-7	Set ext. wall modules to elev. 45'0"	21
A-8	Instl. 2nd level equip., pipe modules & hookup	26
A-9	Set battery rm., CRD maint. rm., & cable chase wall & roof modules	13
A-10	Set steam tunnel slab modules @ elev's 9'0" & 13'0"	8
A-11	Back fill to elev. (-) 9'0"	8
A-12	Set 3rd level elec. rm. fl. slab modules with sm. beams @ elev. 11'0"	21
A-13	Instl. 3rd level elec. equip., pull cables, & hookup	82
A-14	Set steam tunnel & RHR HX's rm wall modules to elev. 45'0"	21
A-15	Set feedwater & main steam pipe modules & hookup	13
A-16	Set 4th level fl. slab modules with stl. beams @ elev. 28'6"	21
A-17	Instl. 4th level HVAC equip., pipe modules & hookup	26
A-18	Set steam tunnel vent barrier	4

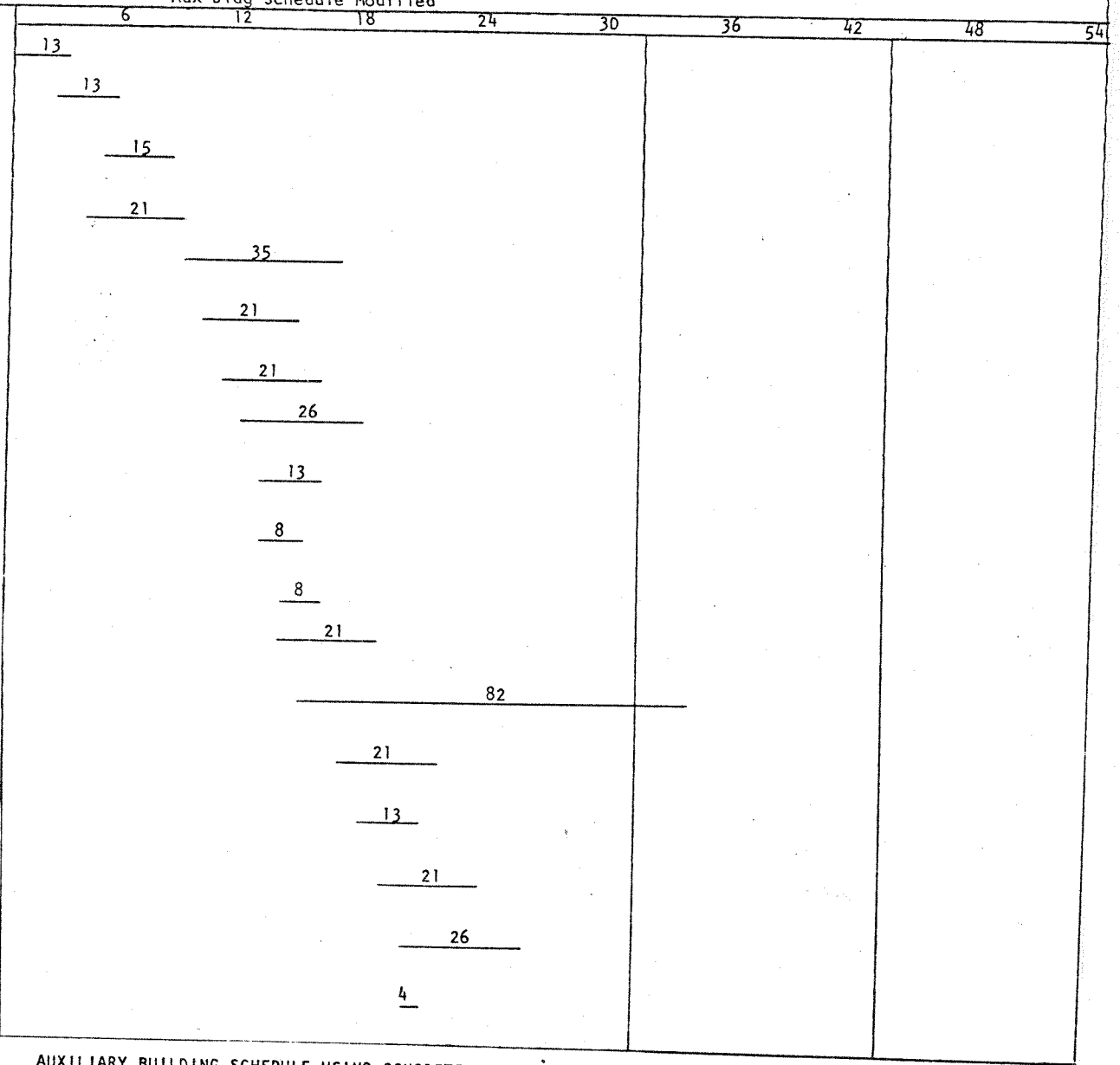

AUXILIARY BUILDING SCHEDULE USING CONCRETE MODULES

FIGURE 9

5003
GE NUCLEAR PARK STUDY
Aux Bldg Schedule Modified

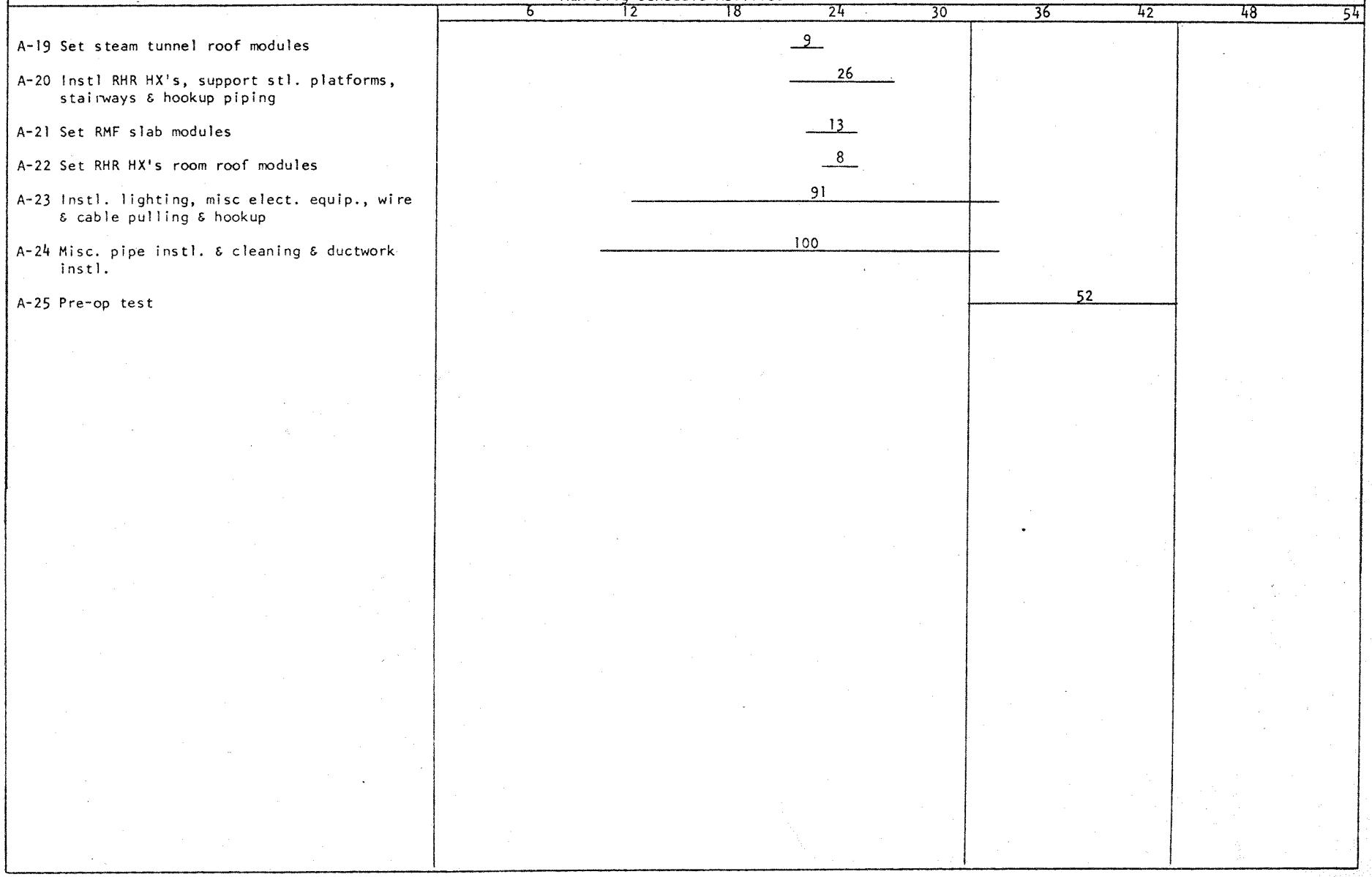

AUXILIARY BUILDING SCHEDULE USING CONCRETE MODULES.

FIGURE 9 (Continued)

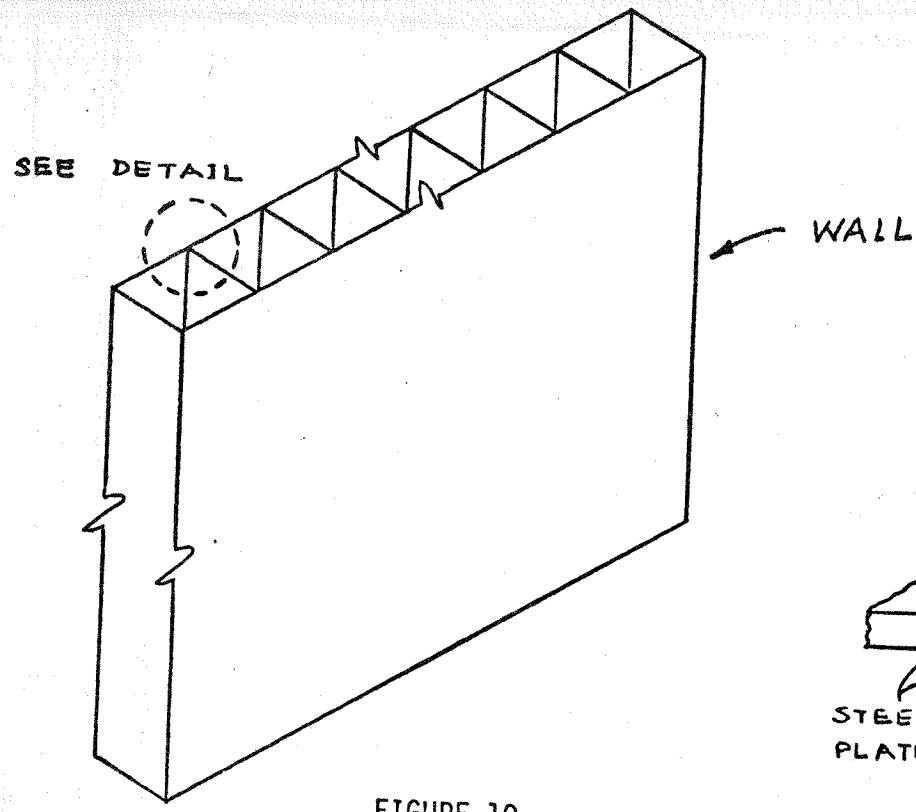

FIGURE 10

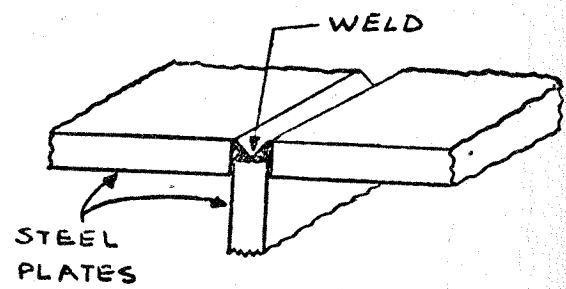

DETAIL

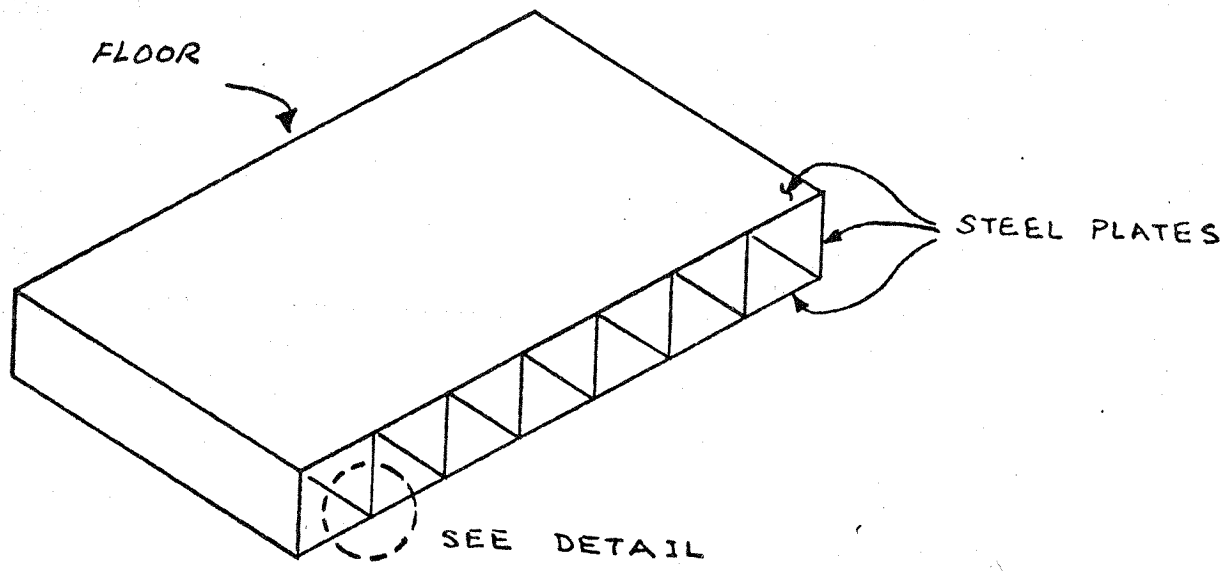

TYPICAL STEEL - WATER WALL

AND FLOOR CONSTRUCTION

FIGURE 11

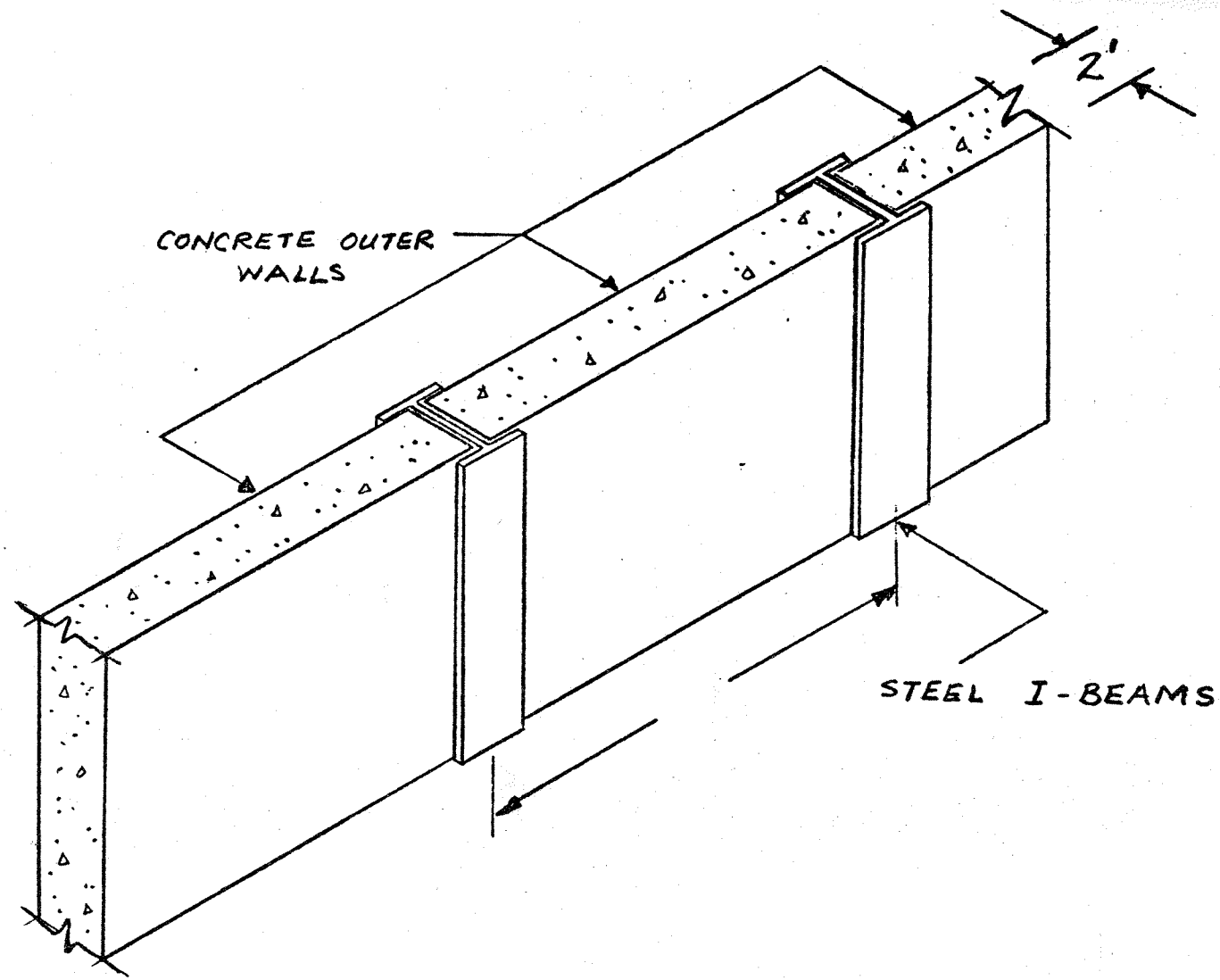

TYPICAL OUTER WALL CONNECTIONS

(Concrete)

FIGURE 12

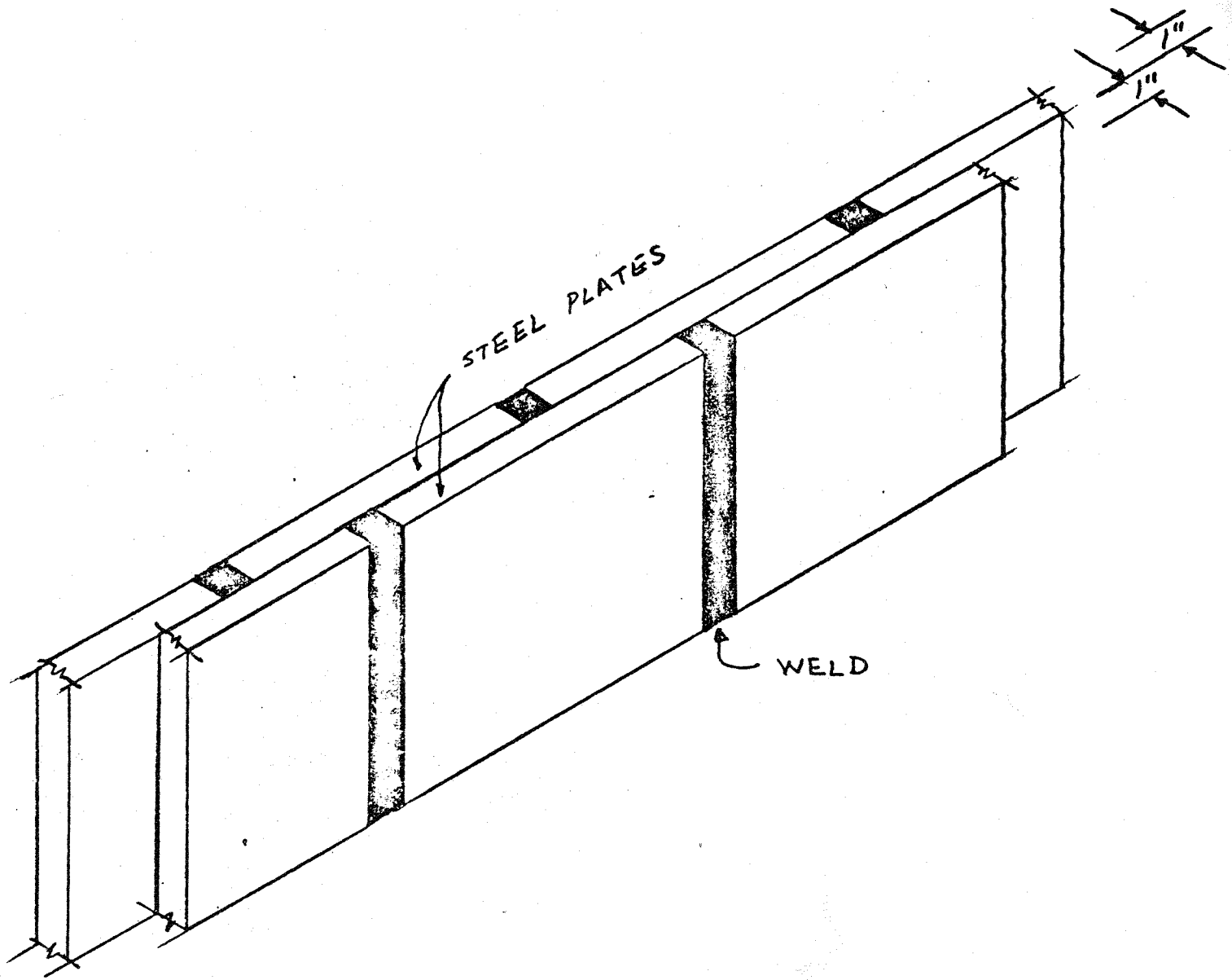

TYPICAL OUTER WALL CONNECTIONS

(Steel)

FIGURE 13

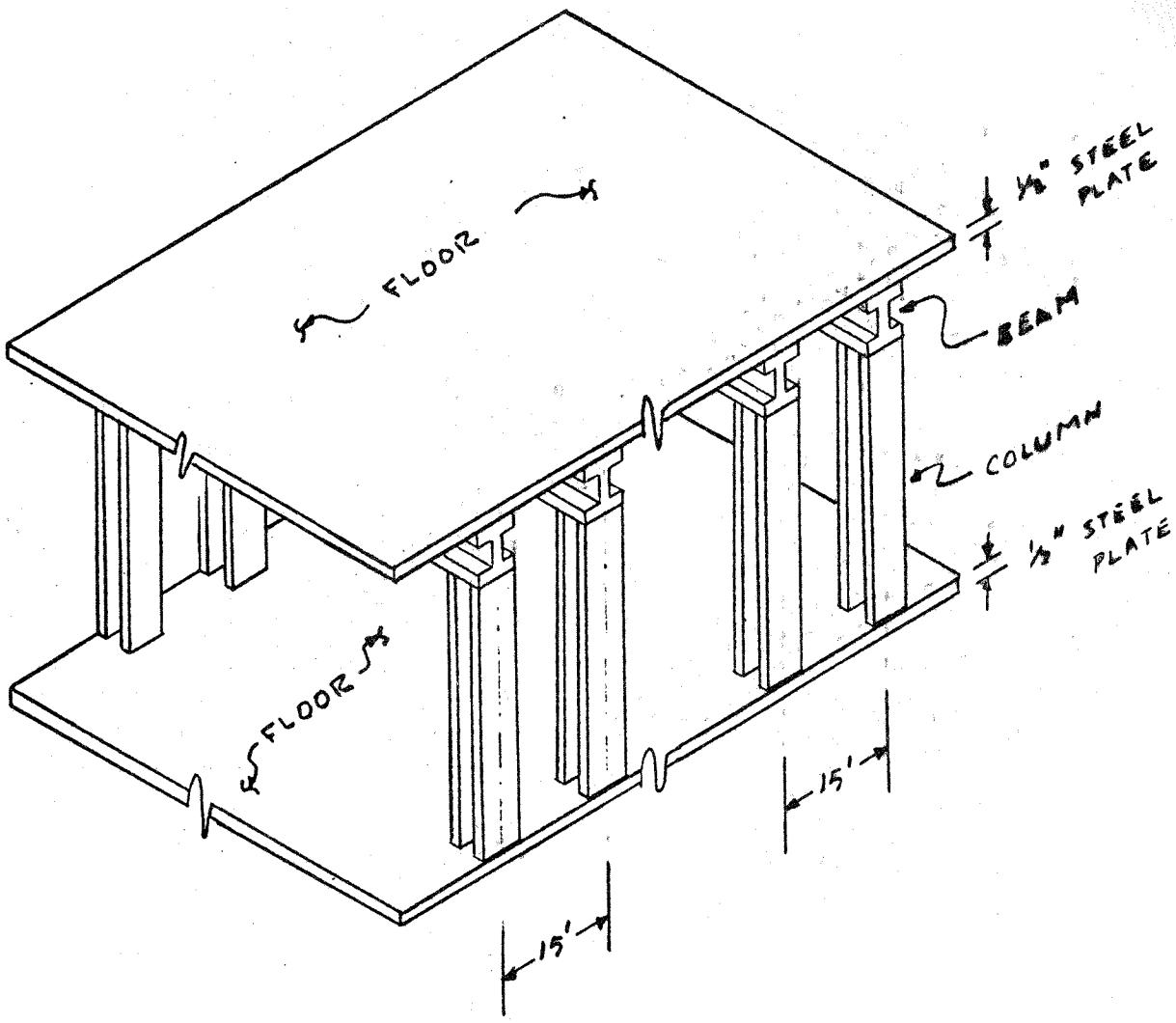

TYPICAL FLOOR CONSTRUCTION

FOR MODULES AB-5a & AB-5b

FIGURE 14

Appendix 5.3

References

1. General Electric Report NEDE-13995-1, "An Investigation of Novel Construction Methods for Nuclear Power Centers" Volume 1.

2. General Electric Report NEDE-13995-2, "An Investigation of Novel Construction Methods for Nuclear Power Centers" Volume 2.

3. "Nuclear Reactor Plant and Multiple Purpose Shielding System Therefor," U.S. Patent No. 3,752,738, dated August 14, 1973, S. Naymark.

4. General Electric Arrangement Drawings K-015-A1 through K-025-A1, Rev. 0 for the BWR-6, Mark III Containment Nuclear Power Plant.

5. C.F. Braun Standard Turbine Building Arrangement Drawings - Figures 1.2-2 through 1.2-8, Revision A, dated 9/20/74.

6. Gwaltney, R.C. Missile Generation and Protection in Light-Water Cooled Power Reactor Plants, ORNL NSIC-22, Oak Ridge National Laboratory, Oak Ridge Tennessee, for the U.S. Atomic Energy Commission, September 1968.

7. A. Amirikian, Design of Protective Structures, Report NT-3726, Bureau of Yards and Docks, Department of the Navy, August 1950.

8. Russell, C.R., Reactor Safeguards, MacMillan, New York, 1962.

9. Stephenson, Dr. John D., "Engineering and Management Guide to Extreme Load Design of Piping Systems, Equipment, Electrical conduit and Structures, with Particular Application to Nuclear Facilities".

10. Bechtel Corporation BC-TOP-9, Design of Structures for Missile Impact.

APPENDIX 4. A3

PRIOR PARK STUDIES

GENERAL ELECTRIC COMPANY

PRIOR PARK STUDIES

The present NSF Energy Park Study provides further definition of nuclear park installation beyond prior studies by U.S. industry, state and federal agencies. Pertinent studies include:

"Puerto Rico Energy Center Study", TID-25602, prepared by Burns and Roe, Inc. and The Dow Chemical Co., July 1970, for the Commonwealth of Puerto Rico, USAEC and U.S. Department of the Interior. This study examined four candidate sites, and concentrated on the West Aguirre site (Southeast coast), where two oil-fired (460 MWe total) plants and one 560 MWe nuclear plant are already started. Another nuclear plant (539 MWe plus steam) would be added. Space is available for future plants. Process steam at 400, 150, and 40 psig would be delivered to adjacent industries to be added, such as aluminum, chlorine caustic, desalting, petroleum refinery, and derivative organic chemicals. Water, agriculture, community, and economic factors were evaluated. Compared to 1969 rate schedule of 4.17 mills/kWh, the new nuclear would cost 4.34 and new fossil 4.44 mills/kWh. This does not include escalation or sulfur removal. The study does not discuss fabrication, reprocessing, transportation or wastes.

"Nuclear Power Parks, A Preliminary Appraisal", November 1972, an internal report for General Electric Company management, compiled through the Power Generation Sales Division. Seven reference nuclear park layouts were evaluated including inland and shore sites, light water reactors (LWR) and liquid metal fast breeder reactors (LMFBR), once-through condenser cooling, ponds, wet and dry towers, reactor sizes from 1220 to 2500 megawatts electrical (MWe), and parks from 5000 to 20,080 MWe. Power transmission, fuel handling, construction, financing organization, growth predictions, public and environmental effects were other briefly identified factors. The report identified problems of parks up to 20,000 MWe including public acceptance of large sites, service community requirements, vulnerability to catastrophic events, inadequate knowledge of waste heat and water dispersal, radioactive waste storage and disposal, and cooperation of utilities, governments, financiers, and labor. Some of the findings of this and the following report were provided to utilities, associations, and government agencies for further studies.

"An Investigation of Novel Construction Methods for Nuclear Power Centers" Volumes 1 and 2, General Electric Company internal report NEDE-13995, October 1973, compiled by the Nuclear

Energy Division, John Barnard, program manager[41]. Parks with four to sixteen 1250 MWe reactors - 5000 to 20,000 MWe total - were drawn in several arrangements, together with fuel reprocessing and fabrication, and waste facilities. Modular construction methods were devised for systems and buildings, based on the BWR/6 and Mark III containment. Benefits include improved manpower and equipment utilization, increased efficiency, shortened schedules (as much as 12 months per plant), reduced costs, and simplified licensing. Particular problems were identified regarding labor management with both construction and factory labor on site, and innovations of large (1000 ton) modular construction.

"The Hanford Nuclear Energy Center, a Preliminary Conceptual Study", Batelle Pacific Northwest Laboratories report BNWL-B-332, January 25, 1974, for the AEC. The present Hanford, Washington AEC site could add at least 10,000 to 15,000 MWe in the 1985 to 1990 period, to 40,000 MWe by the year 2000, and to 60,000 MWe later. There is a fuel fabrication plant which could be expanded. Plutonium experience and facilities are available. Fuel reprocessing could be resumed, and an enrichment plant could be added. Hanford is presently a national radwaste repository for low activity wastes (~ 1 curie/ft^3). Electrical capacity beyond Pacific Northwest needs could replace petroleum usage but would require federal policy and assistance. Unique advantages, including population and environment, favor Hanford, but long transmission lines must be added to load centers. Major institutional requirements include AEC permission, utility agreements, legal, tax, and financial arrangements. This and the following report are identified as appendices to the AEC compilation, WASH-1288[9], discussed later.

"Analysis of the Gulf States Utilities River Bend Site for a Nuclear Center", Oak Ridge National Laboratories report ORNL 74-1-32 Appendix 2. Using the lower Mississippi river site as an example, three to four 1300 MWe boiling water reactors (BWR) and pressurized water reactors (PWR) would be added each year for startup in the period 1984 to 1992 (total 28 LWRs and 36,000 MWe). Fuel reprocessing and fabrication facilities for onsite loads only would be uneconomically small. Estimated facility costs in 1974 $ million are: generating 12,400; fuel 158; transmission 252; total 12,810. Energy cost is 12.4 mills/kWh, slightly below dispersed plants. Similar benefits and problems to the above are discussed. Tritium waste from the PWRs is noted. Analysis of cooling tower heat and moisture dispersal predicts potential fog/rain effects; more research is recommended.

"Evaluation of Nuclear Energy Centers"[9], compiled by AEC Division of Reactor Research and Development, Preliminary WASH-1288, January 1974, with twelve appendices from industry including the Hanford and Gulf States reports above, portions of the GE Preliminary Appraisal, and covering transmission; organizational, institutional and financial aspects; radiological doses; radwaste; process energy uses; description of commercial nuclear power plants; reactor types; site and health standards; uranium supply; load growth; and costs. The 10-20,000 MWe NEC is estimated to cost $5-10 billion in private funds and $5-10 million of government funds (mainly R&D). Financing, anti-trust, FPC and NEPA regulations, taxes and reapportionment across boundaries, and many government roles (support) are discussed.

"General Environmental Statement Mixed Oxide Fuel (Recycle Plutonium in Light-Water-Cooled Reactors)" (GESMO)[12], compiled by AEC Directorate of Licensing - Fuels and Materials, WASH-1327, Volumes 1, 2, 3, 4, Draft August 1974. GESMO indicates that Pu recycle reduces the adverse environmental effects of the LWR fuel cycle, relative to the already small effects of the UO_2 fuel cycle (WASH-1248). By 1990, about 10% of LWR fuel may be mixed oxide fuel. The corresponding uranium reduction saves mining and milling operations, resulting in slightly less radiation exposure of the general population despite slightly increased occupational exposures in fuel reprocessing and fabrication. The report indicates that improved compliance is needed but that no significant increase in safeguards for "strategic SNM" (special nuclear materials: separated Pu, U-233, U-235 $>$20%) will be needed until after 1990 for HTGR and LMFBR fuel. The cost/benefit analysis shows Pu recycle is better than storage. (There is no mention of parks, nor factors significant to integration of facilities.)

The following Figure illustrates the chronology of the seven reference studies and important factors to be considered in this energy park study.

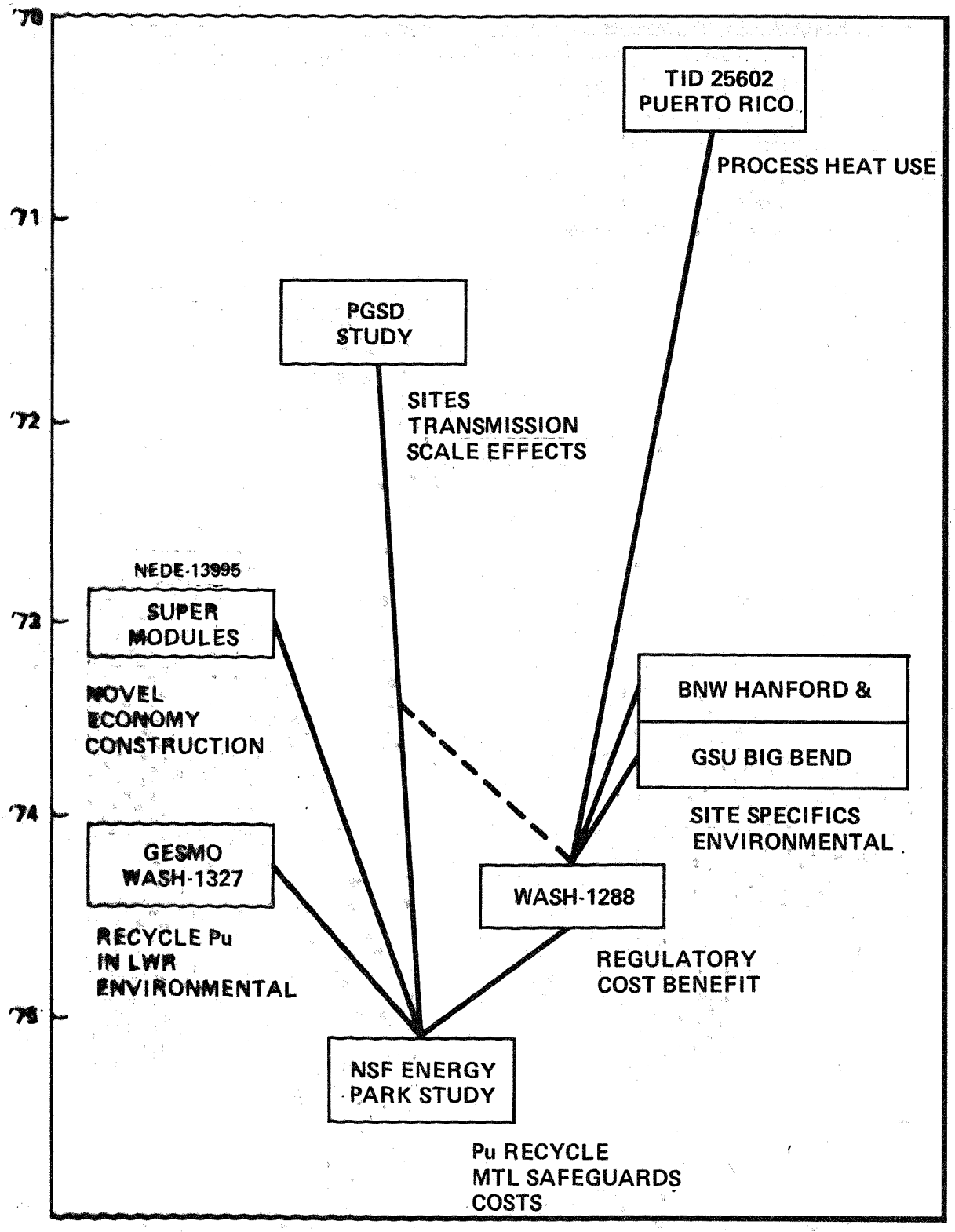

Figure 4.A3-1 Energy Park Study Background

ACKNOWLEDGMENTS

M. J. McNelly -	Program Manager - Nuclear Park Study; Overview
H. V. Clukey -	Managing Editor; Reactors, Environmental and Safeguards Aspects
W. A. Sangster -	LMFBR Aspects
L. S. Bohl -	Nuclear Fuel Cycles
A. B. Carson -	Fuel Reprocessing, Fabrication, Waste Management, Transportation
J. F. Cage -	Construction Aspects and Subcontracts
S. B. Rock -	LWR Cost and Schedule Data

REFERENCES, NUCLEAR ASPECTS (Task 4)

1. "Reactor Fuel Cycle Costs for Nuclear Power Evaluation", WASH-1099, USAEC, December 1971.

2. "Nuclear Power Growth 1974-2000", US AEC Office of Planning and Analysis, WASH-1139(74), US Government Printing Office, February, 1974.

3. "The Nuclear Industry 1970", (no number but first of WASH-1174 series 1970, 1971, 1973), US AEC, November 1970.

4. "The Nuclear Industry 1973", WASH-1174-73, USAEC, no date.

5. "The Nuclear Industry 1974", Energy Research and Development Administration, WASH-1174-74, US Government Printing Office, 1974.

6. "1000-MWe Central Station Power Plants Investment Cost Study", United Engineers and Constructors, Inc., WASH-1230 (Vol. I-IV), USAEC, June 1972.

7. "Nuclear Fuel Resources and Requirements", WASH-1243, US Government Printing Office, April 1973.

8. "Environmental Survey of the Uranium Fuel Cycle", WASH-1248, USAEC, April 1974.

9. "Evaluation of Nuclear Energy Centers", Preliminary WASH-1288, USAEC, January 1974.

10. "High-Level Radioactive Waste Management Alternatives", WASH-1297, USAEC, May 1974.

11. "A Radiobiological Assessment of the Spatial Distribution of Radiation Dose From Inhaled Plutonium", W. J. Bair, C. R. Richmond, and B. W. Wachholtz, WASH-1320, USAEC, September 1974.

12. "GESMO - The Generic Environmental Impact Statement on the Use of Plutonium in Mixed Oxide Fuels in Light Water Reactors", (Draft) WASH-1327, U.S. Atomic Energy Commission, August 1974.

13. "Power Plant Capital Costs - Current Trends and Sensitivity to Economic Parameters", WASH-1345, USAEC, October 1974.

14. "Proposed Final Environmental Statement - Liquid Metal Fast Breeder Reactor Program", WASH-1535 (4 vol.), USAEC, December 1974.

15. "Environmental Statement, Management of Commercial High Level and Transuranium-Contaminated Radioactive Waste", WASH-1539, USAEC, September 1974.

16. "Industry Groping For Answers To Utility Financing Crisis", Nuclear Industry 21, No. 10, p. 17, October 1974.

17. "Report of the Cornell Workshops on the Major Issues of a National Energy Research and Development Program", TID-26528, College of Engineering, Cornell University, Ithaca, N.Y., December 1973.

18. "MEGASTAR. The Meaning of Energy Growth: An Assessment of Systems, Technologies, and Requirements," NASA CR-120338, School of Engineering, Auburn University, Auburn, Alabama, September 1974.

19. "HTGR Fuel and Fuel Cycle Design", R. C. Dahlberg et al, Nuclear Engineering and Design, January 1974.

20. "Report of the EEI Reactor Assessment Panel", Edison Electric Institute, 750 Third Avenue, New York, N.Y. 10017, April 1970.

21. "Nuclear Power Parks, A Preliminary Appraisal", Power Generation Sales Division, (Internal Report), General Electric Co., November 1972.

22. "Projections of Radioactive Wastes To Be Generated By The U.S. Nuclear Power Industry", J. O. Bloemke, C. W. Kee and J. P. Nichols, ORNL-TM-3965, Oak Ridge National Laboratory, February 1974.

23. "Radiological Impact of a Nuclear Center on the Environment", J. K. Soldat, BNWL-B-333, Battelle Pacific Northwest Laboratories, January 1974. (Also Appendix 5 of WASH-1288 to be published).

24. "The Dose From ^{85}Kr Released to the Earth's Atmosphere", M. M. Hendrickson, IAEA-SM-146/12, Battelle Pacific Northwest Laboratory, 1971.

25. "Radioactive Waste Disposal in the Ocean", National Bureau of Standards Handbook 58, National Committee on Radiation Protection, August 1954.

26. Report of the United Nations Scientific Committee on the Effects of Atomic Radiation, 1962.

27. Report of the United Nations Scientific Committee on the Effects of Atomic Radiation, Supplement No. 17 (A/3838), 1958.

28. "Background Radiation - A Literature Search", Lowder and Solon, NYO-4712, USAEC, 1956.

29. Federal Power Commission 1968, as quoted by USAEC Commissioner G. F. Tape in speech, "Environmental Aspects of Operation of Central Power Plants", December 11, 1968.

30. Report of the United Nations Scientific Committee on the Effects of Atomic Radiation, 1966.

31. "Estimated Daily Intake in California Diets, July 1971 - December 1972", U.S. Environmental Protection Agency, Radiation Data and Reports, Vol. 15 No. 2, February 1974.

32. "Radioactivity in Plutonium, Americuim and Curium in Nuclear Reactor Fuel", T. H. Pigford, University of California, June 1974 (A Study For The Energy Policy Project of the Ford Foundation).

33. "Better Ways To Build Process Plants", R. Armstrong, Chem. Eng. 79, 85-94 (April 17, 1972).

REFERENCES (continued)

34. "Packaged Plants Ease Repressure, Waterflood", A. Franco, Oil Gas J. 72, 69-72 (August 5, 1974).

35. "General Electric Standard Safety Analysis Report", General Electric Co., U.S. Nuclear Regulatory Commission Docket No. STN50-447, April 1973.

36. "Braun Safety Analysis Report" (Turbine Generator Building) C. F. Braun & Co., U.S. Nuclear Regulatory Commission Docket No. STN50-532, October 8, 1974.

37. "BWR Plant Standardization Using GESSAR and STRIDE", J. R. Geurts, F. M. Patterson and E. P. Schlinger, American Power Conf. Proc. 36, April 1974.

38. "General Electric BWR Mark III Containment Concept", E. H. VanZylstra and G. E. Wade, NEDO-10571, General Electric Co., April 1972.

39. "Comparison of U.S.A. Reactor Construction Costs - Why So Different?", S. B. Palmeter, Am. Nuc. Soc. 1974 Winter Meeting, October 30, 1974.

40. "Standardization Options and Plant Interfaces", H. E. Vann, Atom. Ind. Forum Workshop, December 1973.

41. "Regulatory Operations Summary Report", USAEC, December 21, 1974.

42. "An Investigation of Novel Construction Methods For Nuclear Power Centers", J. Barnard, NEDE-13995, Vol. 1 and 2, General Electric Co., October 1973.

43. "Manufacturing A Floating Nuclear Plant", J. E. Turner and R. C. Nichols, Elec. World 180, 70-73, November 1, 1973.

44. "Vehicles That Take Swamps and Deserts In Their Stride", C. Rhodes, Engineering (Gr. Br.) _____, 1011-1013, December 1974.

45. "Nuclear Theft: Risks and Safeguards", M. Willrich and T. B. Taylor, Report of the Energy Policy Project of the Ford Foundation, Ballinger Publishing Co., Cambridge, Mass., 1974.

46. "The Reactor Safety Study - Assessment of Accident Risks in U.S. Commercial Nuclear Power Plants", N. L. Rasmussen, WASH-1400, USAEC, Draft August 1974.

☆ U. S. GOVERNMENT PRINTING OFFICE : 1975 589-838/6020

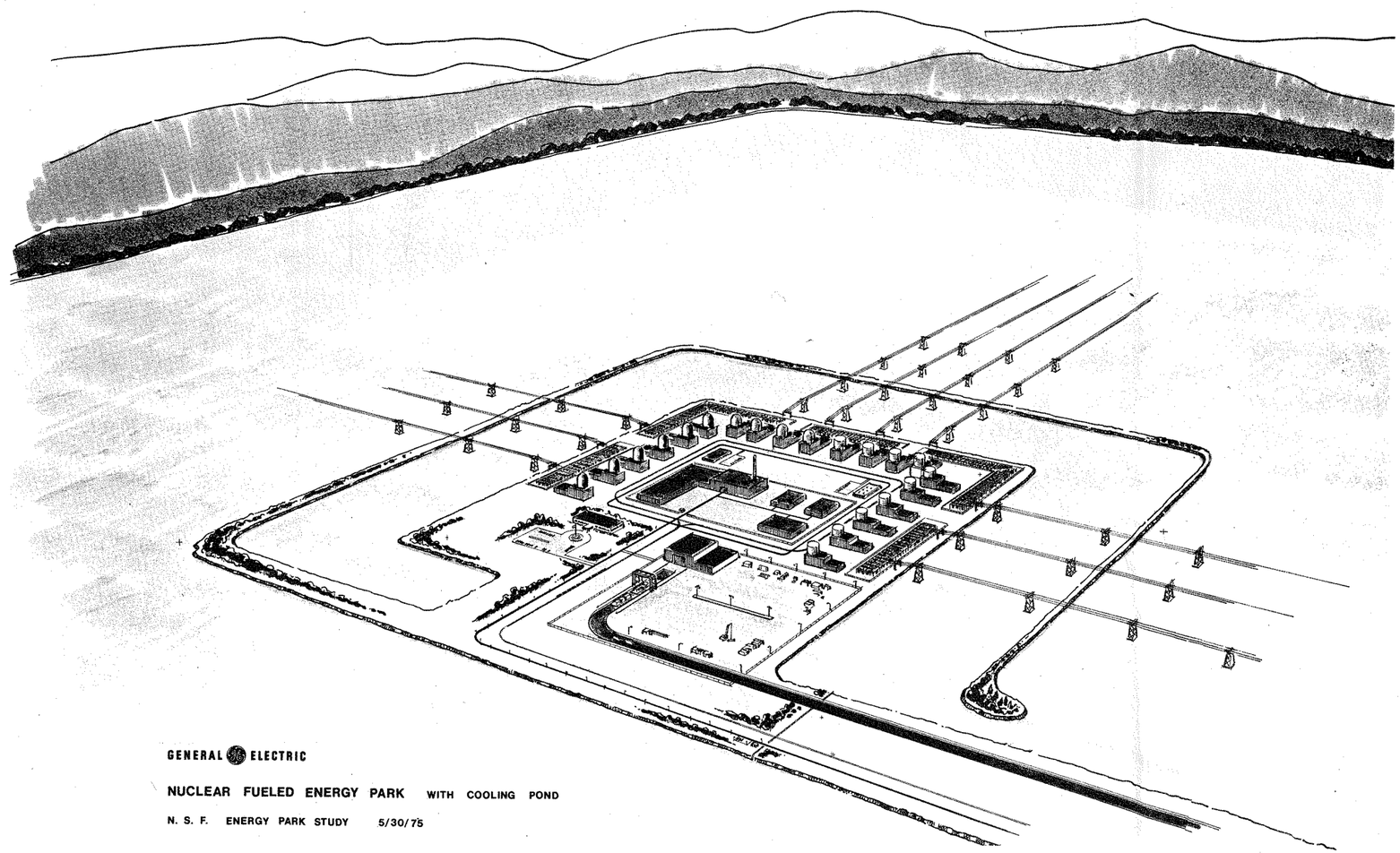

GENERAL ELECTRIC

NUCLEAR FUELED ENERGY PARK WITH COOLING POND

N. S. F. ENERGY PARK STUDY 5/30/75

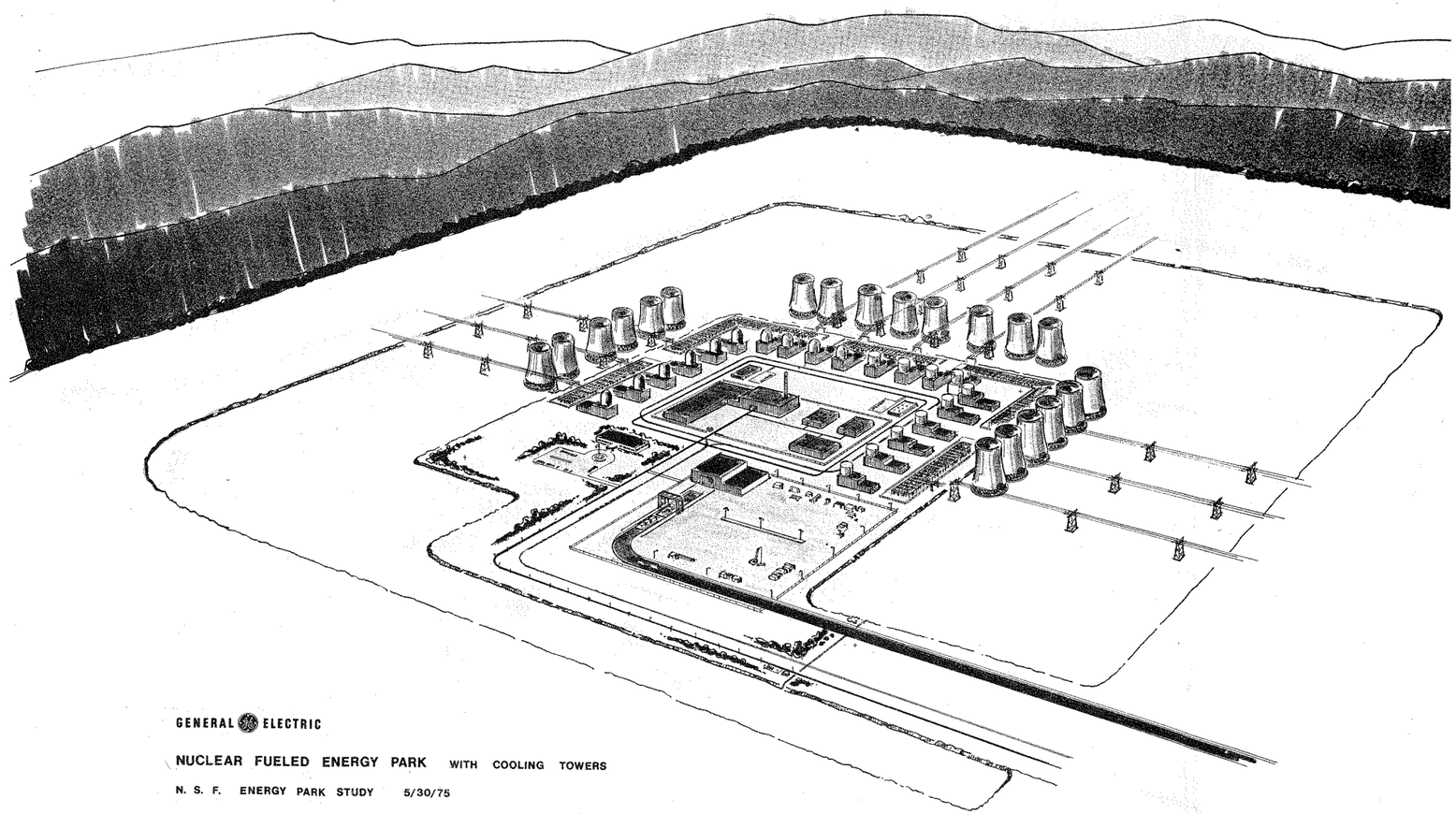

GENERAL ELECTRIC

NUCLEAR FUELED ENERGY PARK WITH COOLING TOWERS

N. S. F. ENERGY PARK STUDY 5/30/75

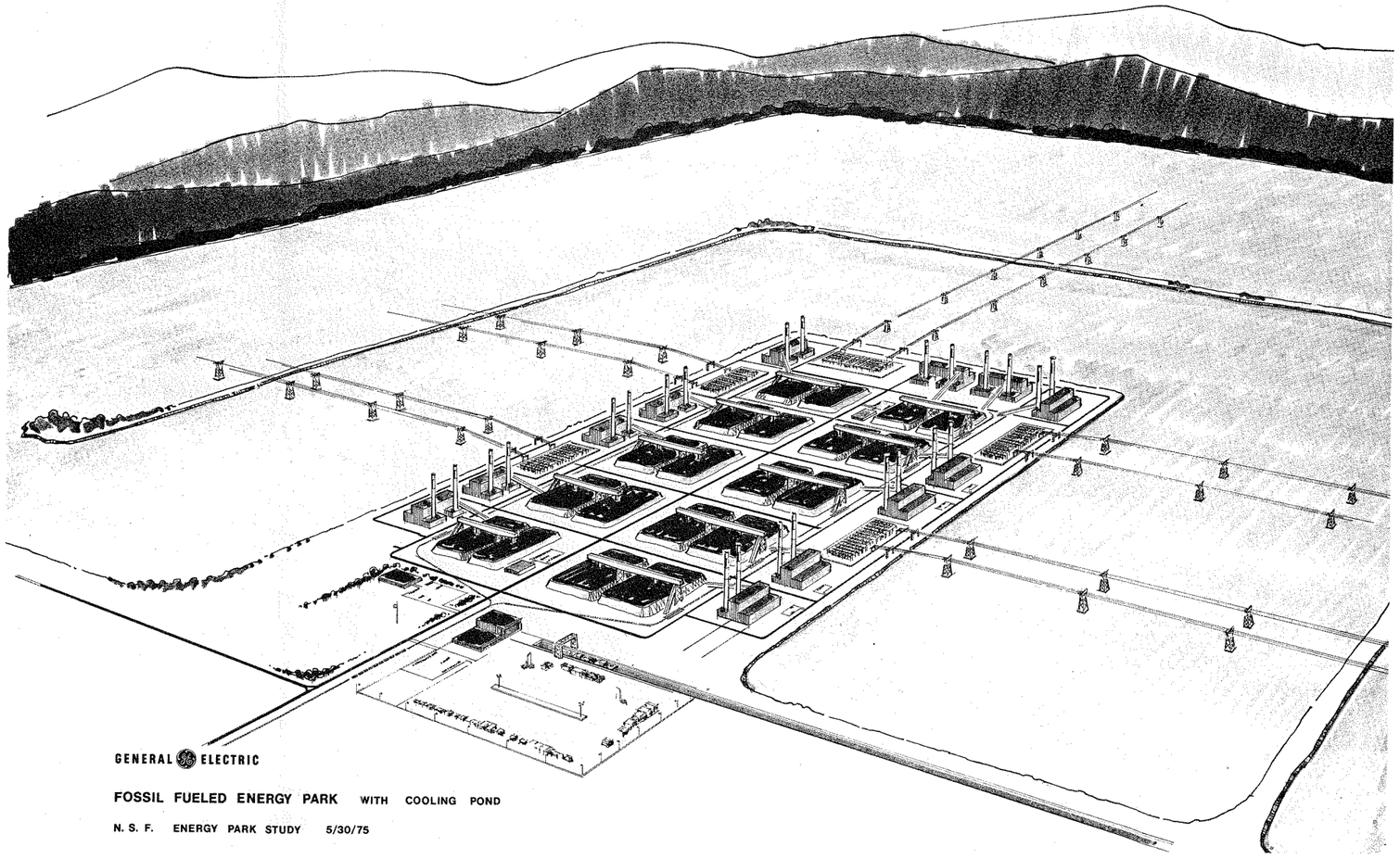

GENERAL ELECTRIC

FOSSIL FUELED ENERGY PARK WITH COOLING POND

N. S. F. ENERGY PARK STUDY 5/30/75

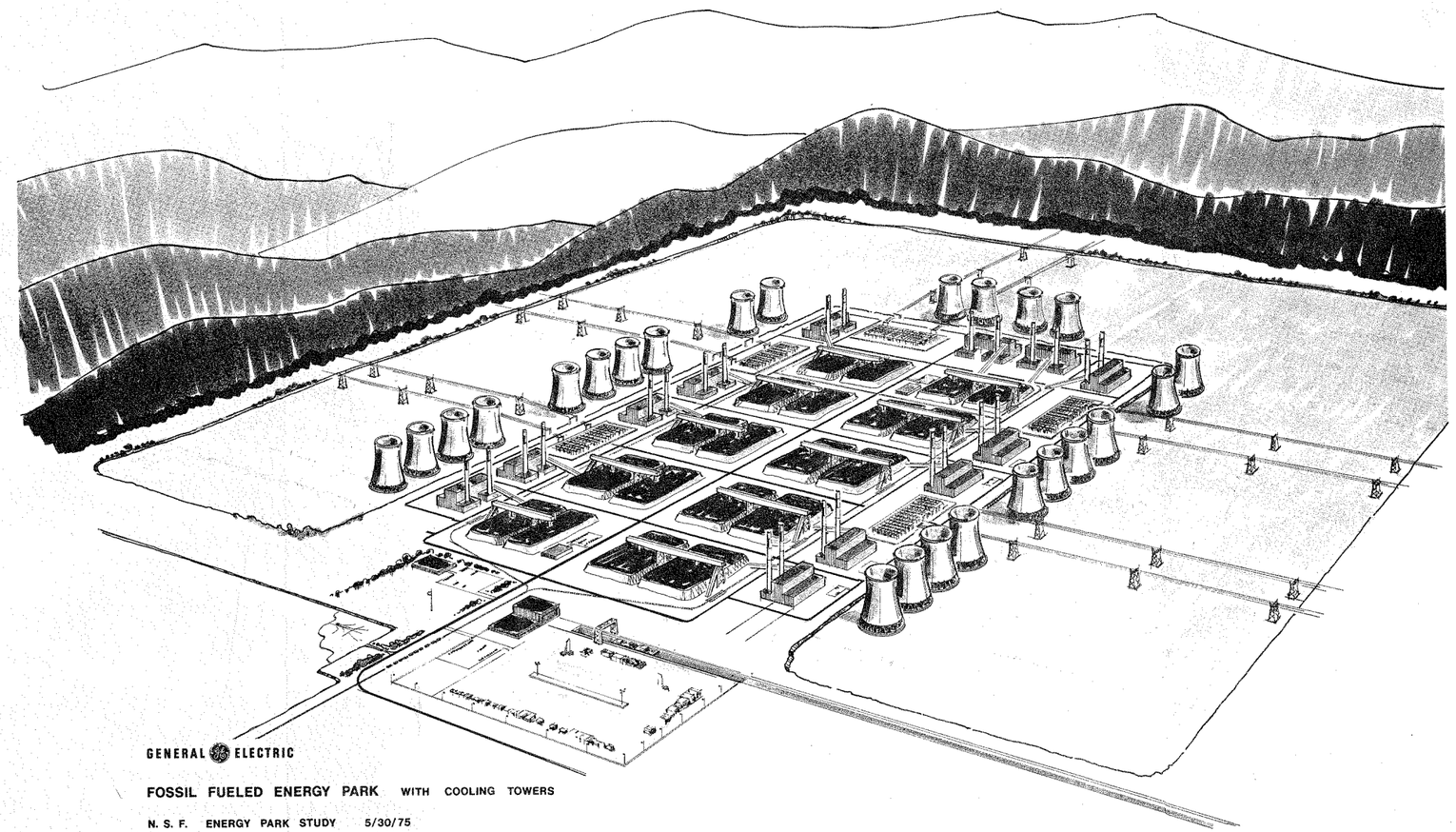

GENERAL ELECTRIC

FOSSIL FUELED ENERGY PARK WITH COOLING TOWERS

N. S. F. ENERGY PARK STUDY 5/30/75

National Science Foundation
Washington, D.C. 20550

Official Business
PENALTY FOR PRIVATE USE, $300

Postage and Fees Paid
National Science Foundation

U.S.MAIL

SPECIAL FOURTH CLASS RATE
BOOK